U.S. Department of the Interior
Minerals Management Service (MMS)

OMB Control Number 1010-0141
OMB Approval Expires 08/31/200

4751
Exhibit No. _____
Worldwide Court Reporters, Inc.

Form MMS 123A/123S - Electronic Version

Application for Permit to Drill a New Well

Lease G32306 **Area/Block** MC 252 **Well Name** 001 **ST** 00 **BP** 00 **Well Type** Ex
Application Status Approved **Operator** 02481 BP Exploration & Production Inc.

Pay.gov Amount: $1,959
Amount: Tracking ID: EWL-APD-8404
Pay.gov Tracking ID: 24VFAUT8

General Well Information

API Number	608174116900	**Approval Date**	05/22/2009	**Approved By**	Frank Patton
Date of Request	05/13/2009	**Req Spud Date**	06/15/2009	**Kickoff Point**	N/A
Water Depth (ft.)	4992	**Drive Size (in)**	36	**Mineral Code**	Hydrocarbon
RKB Elevation	89	**Drive Depth (ft.)**	5361	**Subsea BOP**	Yes
Verbal Approval Date		**Verbal Approval By**			

Proposed Well Location

Surface Location

LEASE (OCS)	G32306	**Area/Block**	MC 252	**Authority**	Federal Lease
Entered NAD 27 Data		**Calculated NAD 27 Departures**		**Calculated NAD 27 X-Y Coordinates**	
Lat:	28.73836889	N	6857	**X**	1202802.892336
Lon:	-88.36593389	E	1037	**Y**	10431702.916855
Surface Plan		**Plan Lease (OCS)**	G32306	**Area/Block**	MC 252

Bottom Location

LEASE (OCS)	G32306	**Area/Block**	MC 252		
Entered NAD 27 Data		**Calculated NAD 27 Departures**		**Calculated NAD 27 X-Y Coordinates**	
Lat:	28.73836889	N	6857	**X**	1202802.892336
Lon:	-88.36593389	E	1037	**Y**	10431702.916855
Bottom Plan		**Plan Lease (OCS)**	G32306	**Area/Block**	MC 252

Approval Comments

The APD is approved with the following cautions/conditions:
Please use caution while drilling because of possible shallow gas at 4370 feet to 4820 feet BML.
Please use caution while drilling because of a moderate potential shallow water flow at1832 feet to 1944 feet, 3200 feet to 3367 feet 3760 feet to 3960 feet and 437- feet to 4600 feet BML.
Please be reminded that an APM should be submitted with a final surveyed surface location plat (in NAD 83), KB, and water depth as soon as they are determined.
If the water depth is greater than 800 meters (2,624 feet) and you plan to leave the wellhead on the seafloor after plugging and abandoning of this well, you are required to obtain MMS approval as soon as possible and no later than 5 work days prior to the start of plugging operations for the well so that MMS will have time to get concurrence from the Navy. Your

CONFIDENTIAL TREATMENT REQUESTED

Form MMS 123A/123S - Electronic Version

Application for Permit to Drill a New Well

Lease G32306 **Area/Block** MC 252 **Well Name** 001 **ST** 00 **BP** 00 **Well Type** Exploration
Application Status Approved **Operator** 02481 BP Exploration & Production Inc.

request should contain the following information: Lat. and Long. coordinates, water depth, wellhead height, completion guide base height, and aerial extent. If the water depth is greater than 1,666 meters (5000 feet), then concurrence from the Navy is not required.
The approval of waiver to leave a wellhead on the sea floor in water depth less than 800 meters (2,624 feet) will be limited to request that pose a mechanical problem or a safety concern, such as diver safety when excavating around the wellhead on the seafloor. The waiver must be approved by the District Manager and concurrence from the Navy must be obtained.

CONFIDENTIAL TREATMENT REQUESTED

BP-HZN-CEC008684

TREX 004751.0002

Form MMS 123A/123S - Electronic Version

Application for Permit to Drill a New Well

Lease G32306 **Area/Block** MC 252 **Well Name** 001 **ST** 00 **BP** 00 **Well Type** Exploration
Application Status Approved **Operator** 02481 BP Exploration & Production Inc.

Geologic Information

H2S Designation Absent	**H2S TVD**

Anticipated Geologic Markers

Name	Top MD
Reticulofenestra pseudoumbilicus	7060
Catinaster mexicanus	9100
Catinaster coalitus	13145
Discoaster kugleri	14153
Cyclicargolithus floridanus	17481
Globorotalia peripheroronda	18400
Sphenolithus heteromorphus	19120
Discoaster petaliformis	19594

Rig Information

RIG SPECIFICATIONS		**ANCHORS**	Yes
Rig Name	T.O. MARIANAS		
Type	SEMISUBMERSIBLE	**ID Number**	44574
Function	DRILLING	**Constucted Year**	1979
Shipyard	MITSIBUSHI	**Refurbished Year**	
RATED DEPTHS			
Water Depth	7000	**Drill Depth**	25000
CERTIFICATES			
ABS/DNV	08/31/2013	**Coast Guard**	12/13/2009
SAFE WELDING AREA			
Approval Date	10/22/1998	**District**	1
Remarks	Water Depth Rating increased from 6000 ft to 7000 ft based on email from Kenny Brown, Mariana Rig Manager - DJT		

CONFIDENTIAL TREATMENT REQUESTED BP-HZN-CEC008685

TREX 004751.0003

Form MMS 123A/123S - Electronic Version

Application for Permit to Drill a New Well

Lease G32306 **Area/Block** MC 252 **Well Name** 001 **ST** 00 **BP** 00 **Well Type** Exploration

Application Status Approved **Operator** 02481 BP Exploration & Production Inc.

Number	Question	Response	Response Text
1	Will you maintain quantities of mud and mud material (including weight materials and additives) sufficient to raise the entire system muc	YES	
2	If hydrocarbon-based drilling fluids were used, is the drilling rig outfitted for zero discharge and will zero discharge procedures be followed?	N/A	
3	If drilling the shallow casings strings riserless, will you maintain kill weight mud on the rig and monitor the wellbore with an ROV to ensure that it	YES	
4	If requesting a waiver of the conductor casing, have you submitted a log to MMS G&G that is with in 500 feet of the proposed bottom hole locat	N/A	
5	Will the proposed operation be covered by an EPA Discharge Permit? (please provide permit number in comments for this question)	YES	NOI has been submitted but permit number has not yet been assigned.
6	Will all wells in the well bay and related production equipment be shut-in when moving on to or off of an offshore platform, or from well to w	N/A	

CONFIDENTIAL TREATMENT REQUESTED

BP-HZN-CEC008686

TREX 004751.0004

Form MMS 123A/123S - Electronic Version

Application for Permit to Drill a New Well

Lease G32306 **Area/Block** MC 252 **Well Name** 001 **ST** 00 **BP** 00 **Well Type** Exploration
Application Status Approved **Operator** 02481 BP Exploration & Production Inc.

Permit Attachments

File Type	File Description	Status

Required Attachments

pdf	Proposed Well Location Plat	Attached
pdf	Drilling prognosis and summary of drilling, cementing, and mud processes	Attached
pdf	Directional Program	Attached
pdf	Pore pressure (PP), Mud Weight (MW), and Fracture Gradient (FG) Plot	Attached
pdf	Proposed Wellbore Schematic	Attached
pdf	Engineering Calculation	Attached
pdf	BOP & Diverter Schematics with Operating Procedures	Attached

Optional/Supplemental Attachments

pdf	Departure List	Attached
pdf	Mooring approval	Attached
PDF	Application for Permit to Drill	Attached

Contacts Information

Name	Scherie Douglas
Company	02481 BP Exploration & Production Inc.
Phone Number	[redacted]
E-mail Address	scherie.douglas@bp.com
Contact Description	Regulatory
Name	Heather Powell
Company	02481 BP Exploration & Production Inc.
Phone Number	[redacted]
E-mail Address	heather.powell@bp.com
Contact Description	Regulatory

CONFIDENTIAL TREATMENT REQUESTED

BP-HZN-CEC008687

TREX 004751.0005

Form MMS 123A/123S - Electronic Version

Application for Permit to Drill a New Well

Lease G32306 **Area/Block** MC 252 **Well Name** 001 **ST** 00 **BP** 00 **Well Type** Exploration

Application Status Approved **Operator** 02481 BP Exploration & Production Inc.

Well Design Information

Interval Number 1 **Type** Casing **Name** Conductor

Section Number	Casing Size (in)	Casing Weight (lb/ft)	Casing Grade	Burst Rating	Collapse Ratin (psi)	Depth (ft) MD	Depth (ft) TVD	Pore Pressure (ppg)
1	28.000	218.0	X-52	2437	952	6275	6275	8.6

GENERAL INFORMATION		PREVENTER INFORMATION		TEST INFORMATION	
Hole Size (in)	32.500	Type	No Preventers	Annular Test (psi)	0
Mud Weight (ppg)	8.6	Size (in)	N/A	BOP/Diverter Test (psi)	0
Mud Type Code	Gelled Sea Water	Wellhead Rating (psi)	0	Test Fluid Weight (ppg)	0.0
Fracture Gradient (ppg)	9.8	Annular Rating (psi)	0	Casing/Liner Test (psi)	0
Liner Top Depth (ft)		BOP/Diverter Rating (psi)	0	Formation Test (ppg)	0.0
Cement Volume (cu ft)	2000				

Interval Number 2 **Type** Casing **Name** Surface

Section Number	Casing Size (in)	Casing Weight (lb/ft)	Casing Grade	Burst Rating	Collapse Ratin (psi)	Depth (ft) MD	Depth (ft) TVD	Pore Pressure (ppg)
1	22.000	277.0	X-80	7955	6670	5161	5161	8.6
2	22.000	224.0	X-80	6363	3876	8000	8000	9.3

GENERAL INFORMATION		PREVENTER INFORMATION		TEST INFORMATION	
Hole Size (in)	26.000	Type	Blowout	Annular Test (psi)	5000
Mud Weight (ppg)	9.5	Size (in)	18.75	BOP/Diverter Test (psi)	6500
Mud Type Code	Water Base	Wellhead Rating (psi)	15000	Test Fluid Weight (ppg)	8.6
Fracture Gradient (ppg)	11.1	Annular Rating (psi)	10000	Casing/Liner Test (psi)	3400
Liner Top Depth (ft)		BOP/Diverter Rating (psi)	15000	Formation Test (ppg)	11.1
Cement Volume (cu ft)	3300				

CONFIDENTIAL TREATMENT REQUESTED

BP-HZN-CEC008688

TREX 004751.0006

Form MMS 123A/123S - Electronic Version

Application for Permit to Drill a New Well

Lease G32306 **Area/Block** MC 252 **Well Name** 001 **ST** 00 **BP** 00 **Well Type** Exploration

Application Status Approved **Operator** 02481 BP Exploration & Production Inc.

Interval Number 3 **Type** Liner **Name** Intermediate

Section Number	Casing Size (in)	Casing Weight (lb/ft)	Casing Grade	Burst Rating	Collapse Ratin (psi)	Depth (ft) MD	Depth (ft) TVD	Pore Pressure (ppg)
1	18.000	117.0	P-110	6680	2110	9900	9900	10.4

GENERAL INFORMATION

Hole Size (in)	22.000
Mud Weight (ppg)	10.6
Mud Type Code	Synthetic Base
Fracture Gradient (ppg)	12.3
Liner Top Depth (ft)	7600.0
Cement Volume (cu ft)	1040

PREVENTER INFORMATION

Type	Blowout
Size (in)	18.75
Wellhead Rating (psi)	15000
Annular Rating (psi)	10000
BOP/Diverter Rating (psi)	15000

TEST INFORMATION

Annular Test (psi)	5000
BOP/Diverter Test (psi)	6500
Test Fluid Weight (ppg)	10.6
Casing/Liner Test (psi)	2800
Formation Test (ppg)	12.3

Interval Number 4 **Type** Casing **Name** Intermediate

Section Number	Casing Size (in)	Casing Weight (lb/ft)	Casing Grade	Burst Rating	Collapse Ratin (psi)	Depth (ft) MD	Depth (ft) TVD	Pore Pressure (ppg)
1	16.000	97.0	P-110	6920	2340	12500	12500	11.6

GENERAL INFORMATION

Hole Size (in)	20.000
Mud Weight (ppg)	11.8
Mud Type Code	Synthetic Base
Fracture Gradient (ppg)	13.6
Liner Top Depth (ft)	
Cement Volume (cu ft)	930

PREVENTER INFORMATION

Type	Blowout
Size (in)	18.75
Wellhead Rating (psi)	15000
Annular Rating (psi)	10000
BOP/Diverter Rating (psi)	15000

TEST INFORMATION

Annular Test (psi)	5000
BOP/Diverter Test (psi)	6500
Test Fluid Weight (ppg)	11.8
Casing/Liner Test (psi)	3100
Formation Test (ppg)	13.6

Interval Number 5 **Type** Liner **Name** Intermediate

Section Number	Casing Size (in)	Casing Weight (lb/ft)	Casing Grade	Burst Rating	Collapse Ratin (psi)	Depth (ft) MD	Depth (ft) TVD	Pore Pressure (ppg)
1	13.625	88.2	Q-125	10030	4800	15300	15300	12.9

GENERAL INFORMATION

Hole Size (in)	16.000
Mud Weight (ppg)	13.1
Mud Type Code	Synthetic Base
Fracture Gradient (ppg)	14.7
Liner Top Depth (ft)	12200.0
Cement Volume (cu ft)	410

PREVENTER INFORMATION

Type	Blowout
Size (in)	18.75
Wellhead Rating (psi)	15000
Annular Rating (psi)	10000
BOP/Diverter Rating (psi)	15000

TEST INFORMATION

Annular Test (psi)	5000
BOP/Diverter Test (psi)	6500
Test Fluid Weight (ppg)	13.1
Casing/Liner Test (psi)	2000
Formation Test (ppg)	14.7

CONFIDENTIAL TREATMENT REQUESTED

BP-HZN-CEC008689

TREX 004751.0007

Form MMS 123A/123S - Electronic Version

Application for Permit to Drill a New Well

Lease G32306 **Area/Block** MC 252 **Well Name** 001 **ST** 00 **BP** 00 **Well Type** Exploration

Application Status Approved **Operator** 02481 BP Exploration & Production Inc.

Interval Number 6 **Type** Open Hole **Name** Open Hole

Section Number	Casing Size (in)	Casing Weight (lb/ft)	Casing Grade	Burst Rating	Collapse Ratin (psi)	Depth (ft) MD	Depth (ft) TVD	Pore Pressure (ppg)
1						20200	20200	14.0

GENERAL INFORMATION		PREVENTER INFORMATION		TEST INFORMATION	
Hole Size (in)	14.000	Type	Blowout	Annular Test (psi)	5000
Mud Weight (ppg)	14.2	Size (in)	18.75	BOP/Diverter Test (psi)	6500
Mud Type Code	Synthetic Base	Wellhead Rating (psi)	15000	Test Fluid Weight (ppg)	0.0
Fracture Gradient (ppg)	16.1	Annular Rating (psi)	10000	Casing/Liner Test (psi)	0
Liner Top Depth (ft)		BOP/Diverter Rating (psi)	15000	Formation Test (ppg)	0.0
Cement Volume (cu ft)					

PAPERWORK REDUCTION ACT OF 1995 (PRA) STATEMENT: The PRA (44 U.S.C. 3501 et seq. Requires us to inform you that we collect this information to obtain knowledge of equipment and procedures to be used in drilling operations. MMS uses the information to evaluate and approve or disapprove the adequacy of the equipment and/or procedures to safely perform the proposed drilling operation. Responses are mandatory (43 U.S.C. 1334). Proprietary data are covered under 30 CFR 250.196. An agency may not conduct or sponsor, and a person is not required to respond to, a collection of information unless it displays a currently valid OMB Control Number. Public reporting burden for this form is estimated to average 27 hours per response, including the time for reviewing instructions, gathering and maintaining data, and completing and reviewing the form. Direct comments regarding the burden estimate or any other aspect of this form for the Information Collection Clearance Officer, Mail Stop 4230, Minerals Management Service, 1849

CONFIDENTIAL TREATMENT REQUESTED

BP-HZN-CEC008690

TREX 004751.0008

Prospect Overview

Macondo is a moderate depth Miocene prospect in the Mississippi Canyon area. The prospect is located entirely outside of any salt body. It is located approximately 24 miles north of BP's Isabela discovery which was drilled in MC 562 during 2006. The primary target for the Macondo prospect is the M56, which was the same as Isabela. The target depth for Macondo is approximately 18,400'. The well will be drilled to a TD of 20,200' to test the older Miocene section below the targeted M56. Seismic data quality over this prospect is very good since there is no salt involved. The well will be drilled as a vertical hole from the "A" location as permitted in the approved Exploration Plan for MC 252.

Drilling Plan Summary

The Macondo well will be drilled with the Transocean "Marianas" moored Semi-Submersible rig in Mississippi Canyon Block 252 at a proposed surface location of 6,943' FNL and 1,036' FEL, in a water depth of 4,992 ft.

A structural string of 36" x 1-½" wall will be jetted (drilled) into position at approximately 280' below the mud line (~10' stick up). After completion of the jetting operations and appropriate waiting time, the running tool will be released and a 26" x 32-1/2" hole will be drilled riserless with seawater and viscous sweeps to an expected total depth of 6,275' md/tvd. There is a low potential for shallow water flow within this section. "Pump & dump" method will remain a contingency in the event any abnormally pressured sands are encountered.

At section TD, an 11.5 ppg pad mud will be spotted and the well will be monitored for flow prior to pulling out of the hole. Once out of the hole, 28" casing will be run to TD and cemented to the mud line with Halliburton foamed Class H lead and tail. The inner string will be pulled out of the hole only after confirmation is made of no flow and no detectable wellhead subsidence.

A 26" hole will be drilled with seawater and viscous sweeps to an expected total depth of 8,000' md/tvd. There is a low potential for shallow flow within this section. "Pump & dump" method will remain a contingency in the event any abnormally pressured sands are encountered. At section TD, 11.5 ppg pad mud will be spotted in open hole while leaving 16.0 ppg mud in the rat hole. Once a static wellbore is verified, the 22", 1.0" wall casing will be run to TD along with the Dril-Quip 18-3/4" high pressure wellhead and 1.25" wall extension joints. After a successful cement job with Halliburton's foamed Class H lead and tail, the wellhead will be pre-loaded to 1,500,000 lbs. The running tool and inner string will be pulled and operations to run BOP and riser will commence.

Once the BOP and riser are successfully installed and tested (per APD), the 22" casing and B/S rams will be tested per the APD. The well will be displaced to Baroid's 10.0 ppg synthetic oil base mud while drilling out the float equipment. A Leak-off Test (LOT) will be performed after drilling out. The estimated fracture gradient is ~11.1 ppg EMW. This setting depth should give sufficient fracture gradient to achieve 18" casing point at 9,900' md/tvd.

An 18-1/8" x 22" hole will be drilled with SOBM to a depth of 9900' md/tvd. At section TD, a 17.0 ppg pad mud will be spotted in the rathole prior to POOH for 18" liner. The 18" liner will be run

and cemented in place with Halliburton Class H lead and tail slurries. A Leak-off Test (LOT) will be performed after drilling out. The estimated fracture gradient is ~ 12.3 ppg EMW. This setting depth should give sufficient fracture gradient to achieve the 16" casing point at 12,500' md/tvd.

A 16-1/2" x 20" hole will be drilled with SOBM to 12,500' md/tvd. At section TD, a 17.0 ppg pad mud will be spotted in the rathole prior to POOH for 16" casing. After POOH, the 16" casing will be run and cemented in place with Halliburton Class H lead and tail slurries. A Leak-off Test (LOT) will be performed after drilling out. The estimated fracture gradient is ~13.6 ppg EMW. This setting depth should give sufficient fracture gradient to achieve the 13-5/8" casing point at 15,300' md/tvd.

A 14-3/4" x 16" hole will be drilled with SOBM to 15,300' md/tvd. At section TD, the rathole will be filled with 17.0 ppg pad mud prior to POOH for 13-5/8" liner. After POOH, the 13-5/8" liner will be run and cemented in place with Halliburton Class H lead and tail slurries. A Leak-off Test (LOT) will be performed after drilling out. The estimated fracture gradient is ~14.7 ppg EMW. This setting depth should give sufficient fracture gradient to achieve drilling to the TD of 20,200' md/tvd.

A 12-1/4"x 14" hole will be drilled to 20,200' md/tvd. The need for wireline evaluation of this interval will be determined by real time LWD data. A decision on the way forward will be made following evaluation of the open hole interval. The well will either be P&A'd or temporarily abandoned for future completion. Once the final evaluation program is complete, a decision will be made as to whether to sidetrack, TA well, or PA the well.

Notes:

MWD and LWD will be used in all intervals to assist with directional control, formation evaluation and pore pressure detection. Additionally, PWD will be utilized to monitor downhole static mud weights, equivalent circulating densities as well as assist in optimizing downhole hydraulics.

All intervals below the 22" casing include optional wireline evaluation programs. Execution of these evaluation programs will be based on real time LWD, paleo and pore pressure data.

During the drilling of all hole sections, the rig shall maintain a minimum inventory of 1000 sx of barite and 200 sx of gel/poly at all times.

Shallow Water Flow Zone Management

An evaluation of shallow water flow (SWF) potential was carried out at the Macondo drilling location as part of BP's standard shallow hazard analysis. The data that formed the basis for this evaluation consist of:

- *3D seismic data*: Approved by MMS for shallow hazard evaluation utility based on EP approval date April 6, 2009
- *Offset well control*: Drilling history, casing design, and nature of 3D seismic reflectors at nearby Texaco MC 252#1 and Dominion MC 296#1 wells (about 1.3 miles and 1.9 miles SW, respectively), Chevron's Gemini well in MC 292#1 (about 14 miles W-SW) and BP's Ariel Well MC 429#A1 (about 13 miles SE)
- *Geohazard report*: The proposed location of this well was selected based on the results of: a regional shallow hazards survey and study of MC208, MC252 and MC296 and portions of surrounding blocks conducted by KC Offshore in 1998 for Texaco Exploration and Production Inc. (Texaco) using HR2D seismic data integrated with 3D exploration seismic data; AND a shallow hazards report for MC252 and MC296 and vicinity produced by Fugro GeoServices, Inc. (Fugro) in 2003 for Dominion Exploration and Production Inc. (Dominion) based on exploration 3D seismic data – the seafloor mapping area for this report covered all of MC252 and MC296, whereas the subsurface mapping area only covered the southern half of MC252 and the northern half of MC296. Additionally, BP completed a site clearance letter for EP submittal at the proposed location based on 3D seismic data.

The seismic character of events at the proposed location was compared to the wells referenced above. No shallow water flow was recorded at the two closest offset wells, MC 252#1 and MC 296#1. The MMS SWF website notes a "low" severity SWF event was documented at the MC 292#1 well and MC 429#A1 well at about 1,784 ft and 1,738 ft below mudline (bml), respectively. The intervals noted as "low" severity SWF roughly correlate with three sand-prone intervals interpreted at the proposed Macondo location within the tophole section. These three potential sand-bearing zones are noted between approximate depths of 1,489 -1,620 ft, 1,832 – 1,944 ft and 1,944 – 2,533 ft bml at Macondo. Based on our seismic facies analysis of the data, and the general absence of reported significant SWF sands in offset wells, we risk the sand-prone intervals has having a low, moderate and low potential for SWF, respectively.

Three additional sand-prone intervals have been interpreted at 3,202 ft – 3,367 ft, 3,761 ft – 3,958 ft and 4,372 ft and 4,618 ft bml at Macondo. Although these zones have been assessed a moderate potential for SWF, they are below the depth of the planned first pressure containment 22-inch casing string.

The table below summarizes concerns and mitigations and meets API RP 65 best practices.

Concern	Mitigation
Site Selection	Drilling location selected to minimize shallow water flow risk. See discussion above. One "low" risk shallow water flow has been interpreted. See geologic top hole forecast on next page.
Identifying SWF	Downhole pressure while drilling (PWD), gamma ray and resistivity tools will be run in the drilling BHA to assist in identifying potential permeable sands or flow events. A shallow hazard observer will be on the rig during the tophole section to monitor logs.

Seafloor Monitoring	Rig based, remotely operated vehicle (ROV) will be on the seafloor monitoring riserless returns and checking for flow on connections. ROV will also be utilized to monitor returns during cementing. A shallow hazard observer will be on the rig during the tophole section to monitor the ROV.
Drilling Fluids	Risk of shallow water flow (SWF) has been interpreted as "low". All riserless intervals are planned to be drilled with seawater. Sufficient quantities of 16.4 ppg water based mud (WBM) will be on location for spotting weighted pad mud in the open hole and for well control in the riserless sections, should it be required.
Casing Point Selection	28" casing point selected at 6275' MD, above an intermediate "low" risk SWF. The 22" casing shoe is selected at 8000' MD, below the deeper "low" risk SWF zone. If a SWF is encountered, pump and dump contingency can be exercised with minimal risk to the jetted-in conductor shoe. The 22" is set above the interval expected to have a "low" probability of shallow gas, and a "moderate" probability of SWF.
Cementing	28" and 22" casing strings will be cemented (via inner string) to the mudline using foamed lead and non-foamed tail cement slurries. Cement returns will be verified with the ROV. Wellhead configuration includes an annular sealing mechanism that can be closed after cementing (to eliminate nitrogen breakout).
Well Control Response	SWF will be killed with weighted WBM. Pump and dump contingencies, using weighted WBM, would be initiated prior to drilling ahead.

MC 252 #1
OCS-G-32306
Attachment 9

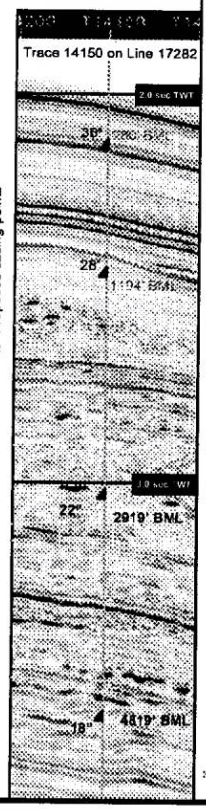

MC252 "A" Mississippi Canyon 252 (OCS-G-32306)	Interpretation		Depth BML (ft)	Depth BSL (ft)	TWT BSL (sec)	Interval Thickness (ft)	Comments	Hazards Risk	
	Stratigraphy	Lithology						Shallow Gas	Shallow Water Flow
	Seafloor		0	4,992	2.036		Relatively smooth seafloor, slopes ~3.0° to SE		
	Unit 1	Clay				250	Hemipelagic clays with possible thin clay debris flows		
	Horizon 1G		250	5,242	2.130				
	Unit 2	Clay				476 / 594	Interbedded marine clays and thin clay-prone debris flows		
	Horizon 1S		726	5,718	2.304				
	Horizon 2G	Clay/Marl	844	5,836	2.348	118	Interbedded marine clays and possible marls		
	Unit 3	Clay/Marl				198	Interbedded marine clays and possible marls		
	Horizon 3G		1,042	6,034	2.416		Potential sands with shallow gas associated with overbank deposits to east		
	Unit 4	Clay				447 / 802	Clay turbidites and debris flows		
	Horizon 3S	Clay, silt and sand	1,489	6,481	2.570				
	Horizon 4S		1,620	6,612	2.614	131	Overbank/channel levee clays and possible silts and sands		
	Horizon 5S	Clay	1,832	6,824	2.685	212	Clay turbidites and thin debris flows		
	Horizon 6S	Sands and silts	1,944	6,936	2.722	112	Continuous sands and silts with shallow gas to northwest		
	Unit 5	Clay and possible sands				588 / 588	Interbedded clay turbidites and thin clay-prone debris flows with possible sands		
	Horizon 4G	Clay and possible silts	2,533	7,525	2.912				
	Horizon 5G		2,832	7,824	3.006	299	Massive clay-prone debris flow with possible silts		
	Unit 6					370			
		Continuous sands	[illegible]	[illegible]	[illegible]	165			
		Clays, silts and sands	[illegible]	[illegible]	[illegible]	394 / 2,496	Interbedded clay turbidites and debris flows with locally continuous sands		
		Continuous sands	[illegible]	[illegible]	[illegible]	197			
			[illegible]	[illegible]	[illegible]	414			
		Continuous sands	[illegible]	[illegible]	[illegible]	246			
			[illegible]	[illegible]	[illegible]	710			
	Horizon 6G	Depth Limit of Investigation	5,328	10,320	3.734				

Risk level: Negligible | Low | Moderate | High

(Unit and Horizon nomenclature taken from Fugro, 2003)

*updated 5-6-09

Mark Hafle
5/11/09

CONFIDENTIAL TREATMENT REQUESTED

BP-HZN-CEC008695

TREX 004751.0013

BP GoM Deepwater Exploration

Macondo Prospect - APD Schematic

OPERATOR:	BP	PARTNER: None (TBD)	DATE: 5/11/2009_Rev1 APD Schematic
WELL NAME:	MC 252 #1, MACONDO PROSPECT, OCS-G-32306		PTD: 20,200' MD/TVD
FIELD / PROSPECT:	WILDCAT	AREA: OFFSHORE STATE LA	RF ELEV: 89' (Marianas) WD: 4992'
SURFACE LOCATION:	X=1,202,803.88 Y=10,431,617.00		PBHL: X=1,202,803.88 Y=10,431,617.00
OBJECTIVE ZONE(S):	M56		RIG: Transocean Marianas

DRIL-QUIP SS-15ES BIGBORE II WELLHEAD SYSTEM WITH 18.500" ID

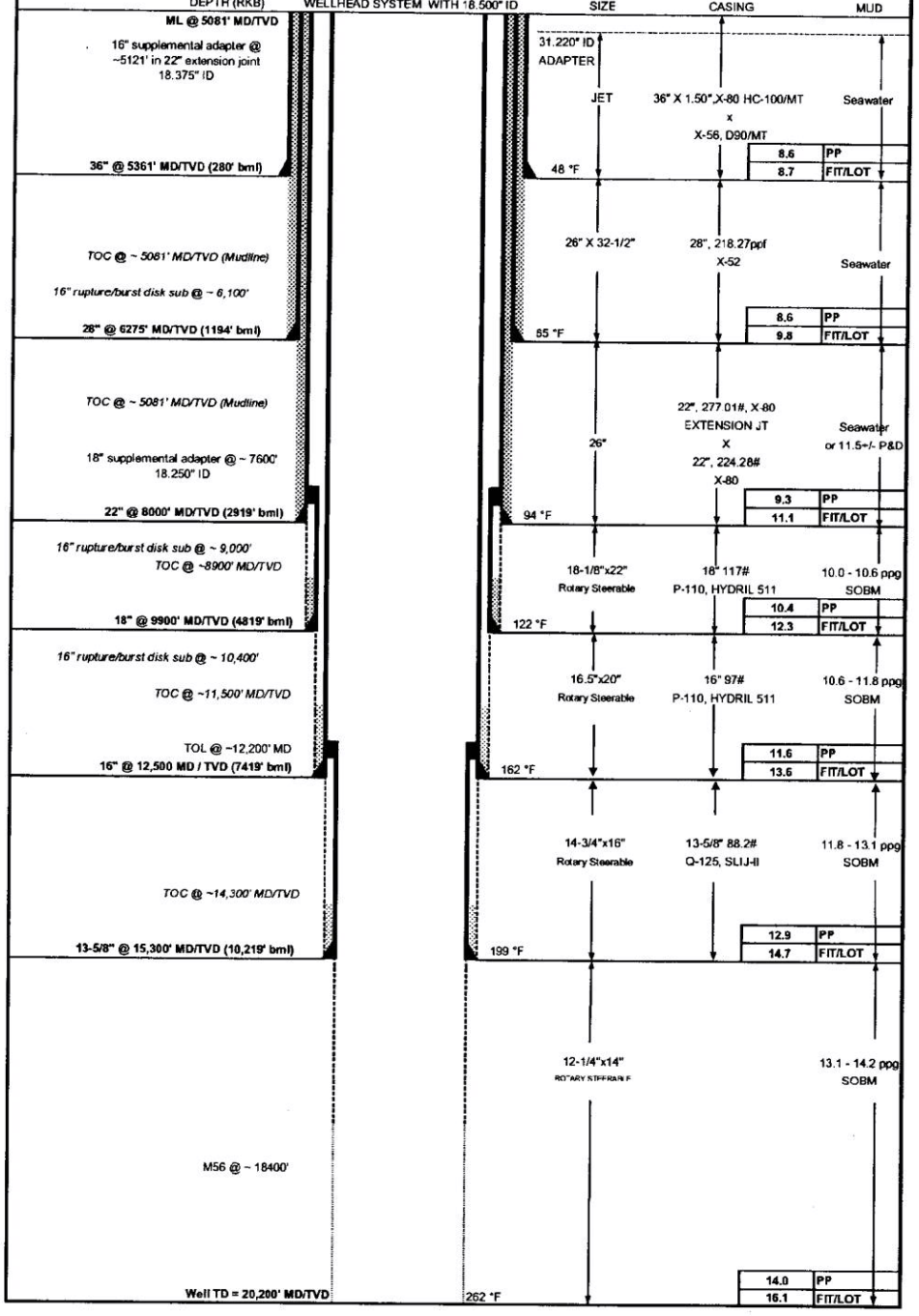

MC 252 #1
OCS-G-32306
Attachment 3

Mark Hafle
5/11/09

Y = 10, 438, 560.00ft

X = 1, 188, 000.00ft

Notes:
1) All coordinate data in UTM Zone 16 North, NAD27, US survey feet unless otherwise noted;
2) All geodetic conversions transformed utilizing NADCON version 2.0 or better equivalent software;
3) Locations NOT in a Military Warning Area

NAD83 Data:	
SHL Data MC252 No. 1 ST00 BP00	Latitude 28°44'18.128"N Longitude 88°21'57.362"W

Proposed Well Location
MC252 OCS-G32306
Well No. 1 ST00 BP00
X = 1,202,803.88ft UTM Zone 16 North
Y = 10,431,617.00ft NAD27 - US Survey feet
Latitude 28°44'17.277"N NAD27
Longitude 88°21'57.340"W
MD/TVD= 20,200ft
Water depth = -4992ft

6943.00ft

1036.12ft

MC252
BP E&P Inc
OCS-G32306

Grid North

BHL 001 ST00BP01
SHL 001
BHL 001 ST00BP00
BHL 001 ST00BPC2
SHL 001

Y = 10, 422, 720.00ft

X = 1, 203, 840.00ft

Digital Copy
Signed & sealed original on file
Brian D. Autio Date: 8 May 2009
Registered Professional Land Surveyor
State of Louisiana
Registration Number 4818
Employee of bp America, Inc
(281) 366-4452

I, Brian D. Autio, hereby certify that the proposed surface location of BP EXPL & PROD. OCS-G32306 MC 252 No. 1 ST00BP00 is as follows:
Location: 1,036.12 ft. from the East Line and 6,943.00 ft. from the North Line of Mississippi Canyon Block 252.

"Confidential Information"

Sheet 2 of 2

bp

BP EXPLORATION AND PRODUCTION
Proposed Well Location OCS-G32306 MC 252 No. 1 ST00BP00
Mississippi Canyon Area (OPD# NH16-10) Block 252 Offshore Federal - Louisiana
Plat prepared by: Brian D. Autio, RPLS BP IT&S GoM SPU

Scale 1" = 2000 ft
Date: 8May2009

CONFIDENTIAL TREATMENT REQUESTED

BP Gulf of Mexico - MMS APD Worksheet

MASP - Frac Gradient Method

The frac pressure at the 22 Casing shoe is:
P @ shoe = 8,000' x 11.1ppg x 0.052 = 4,618 psi

A column of 0.10 psi/ft gas yields:
P @ ML = 4,618 - 0.10 x 2,919' = 4,326 psi
P @ surf = 4,618 - 0.10 x 8,000' = 3,818 psi

The frac pressure at the 18 shoe is:
P @ shoe = 9,900' x 12.3ppg x 0.052 = 6,332 psi

A column of 0.15 psi/ft gas yields:
P @ ML = 6,332 - 0.15 x 4,819' = 5,609 psi
P @ surf = 6,332 - 0.15 x 9,900' = 4,847 psi

MASP - Bottom Hole Pressure Method

The bottom hole pressure at 9,900' TVD is:
P @ TD = 9,900' x 10.4ppg x 0.052 = 5,354 psi

A column of 70% gas & 30% liquid back to surface gives:
P @ surf = 5,354 - 0.7 x 9,900' x 0.10 psi/ft
- 0.3 x 9,900' x 10.6ppg x 0.052 = 3,024 psi

Using 70% gas and 30% liquid from ML to surface, the mudline pressure is:
P @ ML = 3,024 + 0.7 x 5,081' x 0.10 psi/ft
+ 0.3 x 5,081' x 10.6ppg x 0.052 = 4,220 psi

The bottom hole pressure at 12,500' TVD is:
P @ TD = 12,500' x 11.6ppg x 0.052 = 7,540 psi

A column of 60% gas & 40% liquid back to surface gives:
P @ surf = 7,540 - 0.6 x 12,500' x 0.15 psi/ft
- 0.4 x 12,500' x 11.8ppg x 0.052 = 3,347 psi

Using 60% gas and 40% liquid from ML to surface, the mudline pressure is:
P @ ML = 3,347 + 0.6 x 5,081' x 0.15 psi/ft
+ 0.4 x 5,081' x 11.8ppg x 0.052 = 5,051 psi

MASP (at surface)

MASP for 22 Casing = 3,024 psi
Worst Case MASP = 3,347 psi, rounded up to 3,400 psi

MASP for 18 Liner = 3,347 psi

Test Pressure

MASP at the wellhead (based on the liner) + 500 psi is:
P @ ML = 5,051 + 500 = 5,551 psi
The maximum test pressure with 8.6 ppg mud is:
P @ surf = 5,551 - 5,081' x 8.6 ppg x 0.052 = 3,279 psi
At the casing shoe, external pressure is:
Po @ shoe = 8,000' x 9.0 ppg x 0.052 = 3,744 psi
The test pressure is limited to 70% of the 22" MIYP:
P @ surf = 0.7 x 6,360 + 3,744 - 8,000' x 8.6ppg x 0.052 = 4,618 psi

For the liner, MASP at the wellhead + 500 psi is:
P @ ML = 5,051 + 500 = 5,551 psi
The maximum test pressure with 10.6 ppg mud is:
P @ surf = 5,551 - 5,081' x 10.6 ppg x 0.052 = 2,751 psi
At the liner shoe, external pressure is:
Po @ shoe = 9,900' x 9.0 ppg x 0.052 = 4,633 psi
The test pressure is limited to 70% of the 18" MIYP:
P @ surf = 0.7 x 6,680 + 4,633 - 9,900' x 10.6ppg x 0.052 = 3,852 psi
Limiting the test pressure to 70% of the 22 Casing MIYP at 7,600' yields:
P @ surf = 0.7 x 6,360 - 7,600' x (10.6ppg - 9.0ppg) x 0.052 = 3,820 psi

The highest test pressure is 3,279 psi on 8.6 ppg mud, rounded up to 3,300 psi.

TREX 004751.0016

BP Gulf of Mexico - MMS APD Worksheet

Minimum Design Factors

The burst design factor is calculated as follows:

DF = MIYP / load, where the load is the differential pressure at either the top of the string or at the shoe

At the mudline, the internal pressure is the MASP at the wellhead

Internal pressure at 5,081' = 5,051 psi
External pressure at 5,081' = 5,081' x 8.6 ppg x 0.052 = 2,272 psi
DF = 7,950 / (5,051 - 2,272) = 2.86

At the 18 TOL, the internal pressure is the MASP at the wellhead + 2,519' of 60% gas and 40% mud

Internal pressure at 7,600' = 5,051 psi + 2,519' x [0.4 x 11.8 ppg x 0.052 + 0.6 x 0.15 psi/ft] = 5,896 psi
External pressure at 7,600' = 7,600' x 9.0 ppg x 0.052 = 3,557 psi
DF = 6,360 / (5,896 - 3,557) = 2.72

At the x-over, the internal pressure is the MASP at the wellhead + 80' of 70% gas and 30% mud

Internal pressure at 5,161' = 5,051 psi + 80' x [0.3 x 11.8 ppg x 0.052 + 0.7 x 0.15 psi/ft] = 5,074 psi
External pressure at 5,161' = 5,161' x 9.0 ppg x 0.052 = 2,415 psi
DF = 6,360 / (5,074 - 2,415) = 2.39

The minimum burst design factor = 2.39

The collapse design factor is calculated as follows:

DF = Collapse Rating / load, where the load is defined by replacing the lightest internal mud weight with seawater down to the mudline

At the mudline, the internal pressure is 5,081' of 8.6 ppg sea water

Internal pressure at 5,081' = 5,081' x 8.6 ppg x 0.052 = 2,272 psi
External pressure at 5,081' = 5,081' x 9.5 ppg x 0.052 = 2,510 psi
The API collapse pressure is 2,510 - 2,272 x [1 - 2 / (22 / 1.25)] = 496 psi
DF = 6,670 / 496 = 13.45

At the shoe, the internal pressure is 5,081' of 8.6 ppg sea water + 2,919' of 8.6 ppg mud

Internal pressure at 8,000' = 5,081' x 8.6 ppg x 0.052 + 2,919' x 8.6 ppg x 0.052 = 3,578 psi
External pressure at 8,000' = 8,000' x 9.5 ppg x 0.052 = 3,952 psi
The API collapse pressure is 3,952 - 3,578 x [1 - 2 / (22 / 1)] = 700 psi
DF = 3,870 / 700 = 5.53

At the x-over, the internal pressure is 5,081' of 8.6 ppg sea water + 80' of 8.6 ppg mud

Internal pressure at 5,161' = 5,081' x 8.6 ppg x 0.052 + 80' x 8.6 ppg x 0.052 = 2,308 psi
External pressure at 5,161' = 5,161' x 9.5 ppg x 0.052 = 2,550 psi
The API collapse pressure is 2,550 - 2,308 x [1 - 2 / (22 / 1)] = 451 psi
DF = 3,870 / 451 = 8.57

The minimum collapse design factor is 5.53

The tension design factor is calculated as follows:

DF = Tension Rating / load, where the load is the hanging weight of the string in mud plus 100 kips overpull

This simplified tension uses the TVD hanging weight and a buoyancy factor of (65.5 - 9.5) / 65.5 = 0.855 for 9.5 ppg mud
Tension = (8,000' - 5,161') x 224 ppf x 0.855 = 543.7 kips
DF = 5,278.0 / (543.7 + 100 kips overpull) = 8.20

The tension design factor is 8.20

CONFIDENTIAL TREATMENT REQUESTED
BP-HZN-CEC008699
TREX 004751.0017

BP Gulf of Mexico - MMS APD Worksheet

MASP - Frac Gradient Method

The frac pressure at the 18 Liner shoe is:

P @ shoe = 9,900' x 12.3ppg x 0.052 = 6,332 psi

A column of 0.15 psi/ft gas yields:

P @ ML = 6,332 - 0.15 x 4,819' = 5,609 psi
P @ surf = 6,332 - 0.15 x 9,900' = 4,847 psi

MASP - Bottom Hole Pressure Method

The bottom hole pressure at 12,500' TVD is:

P @ TD = 12,500' x 11.6ppg x 0.052 = 7,540 psi

A column of 60% gas & 40% liquid back to surface gives:

P @ surf = 7,540 - 0.6 x 12,500' x 0.15 psi/ft
- 0.4 x 12,500' x 11.8ppg x 0.052 = 3,347 psi

Using 60% gas and 40% liquid from ML to surface, the mudline pressure is:

P @ ML = 3,347 + 0.6 x 5,081' x 0.15 psi/ft
+ 0.4 x 5,081' x 11.8ppg x 0.052 = 5,051 psi

MASP (at surface)

MASP for 18 Liner = 3,347 psi
Worst Case MASP = 3,347 psi, rounded up to 3,400 psi

Test Pressure

MASP at the wellhead + 500 psi is:

P @ ML = 5,051 + 500 = 5,551 psi

The maximum test pressure with 10.6 ppg mud is:

P @ surf = 5,551 - 5,081' x 10.6 ppg x 0.052 = 2,751 psi

At the casing shoe, external pressure is:

Po @ shoe = 9,900' x 9.0 ppg x 0.052 = 4,633 psi

The test pressure is limited to 70% of the 18" MIYP:

P @ surf = 0.7 x 6,680 + 4,633 - 9,900' x 10.6ppg x 0.052 = 3,852 psi

The test pressure is also limited by the 22 Casing at 7,600'

P @ surf = 0.7 x 6,360 - 7,600' x (10.6ppg - 9.0ppg) x 0.052 = 3,820 psi

The highest test pressure is 2,751 psi on 10.6 ppg mud, rounded up to 2,800 psi.

CONFIDENTIAL TREATMENT REQUESTED

BP Gulf of Mexico - MMS APD Worksheet

Minimum Design Factors

The burst design factor is calculated as follows:

DF = MIYP / load, where the load is the differential pressure at either the top of the string or at the shoe

At the TOL, the internal pressure is the MASP at the wellhead + 2,519' of 60% gas / 40% mud

Internal pressure at 7,600' = 5,051 psi + 2,519' x [0.4 x 11.8 ppg x 0.052 + 0.6 x 0.15 psi/ft] = 5,896 psi
External pressure at 7,600' = 7,600' x 9.0 ppg x 0.052 = 3,557 psi
DF = 6,680 / (5,896 - 3,557) = 2.86

At the shoe, the internal pressure is the MASP at the wellhead + 4,819' of 60% gas and 40% mud

Internal pressure at 9,900' = 5,051 psi + 4,819' x [0.4 x 11.8 ppg x 0.052 + 0.6 x 0.15 psi/ft] = 6,668 psi
External pressure at 9,900' = 9,900' x 9.0 ppg x 0.052 = 4,633 psi
DF = 6,680 / (6,668 - 4,633) = 3.28

The minimum burst design factor = 2.86

The collapse design factor is calculated as follows:

DF = Collapse Rating / load, where the load is defined by replacing the lightest internal mud weight with seawater down to the mudline

At the TOL, the internal pressure is 5,081' of 8.6 ppg sea water + 2,519' of 10.6 ppg mud

Internal pressure at 7,600' = 5,081' x 8.6 ppg x 0.052 + 2,519' x 10.6 ppg x 0.052 = 3,661 psi
External pressure at 7,600' = 7,600' x 10.6 ppg x 0.052 = 4,189 psi
The API collapse pressure is 4,189 - 3,661 x [1 - 2 / (18 / 0.625)] = 783 psi
DF = 2,110 / 783 = 2.70

At the shoe, the internal pressure is 5,081' of 8.6 ppg sea water + 4,819' of 10.6 ppg mud

Internal pressure at 9,900' = 5,081' x 8.6 ppg x 0.052 + 4,819' x 10.6 ppg x 0.052 = 4,928 psi
External pressure at 9,900' = 9,900' x 10.6 ppg x 0.052 = 5,457 psi
The API collapse pressure is 5,457 - 4,928 x [1 - 2 / (18 / 0.625)] = 871 psi
DF = 2,110 / 871 = 2.42

The minimum collapse design factor = 2.42

The tension design factor is calculated as follows:

DF = Tension Rating / load, where the load is the hanging weight of the string in mud plus 100 kips overpull

This simplified tension uses the TVD hanging weight and a buoyancy factor of (65.5 - 10.6) / 65.5 = 0.838 for 10.6 ppg mud
Tension = (9,900' - 7,600') x 117 ppf x 0.838 = 225.6 kips
DF = 2,331.0 / (225.6 + 100 kips overpull) = 7.16

The tension design factor is 7.16

CONFIDENTIAL TREATMENT REQUESTED

BP Gulf of Mexico - MMS APD Worksheet

MASP - Frac Gradient Method

The frac pressure at the 16 Casing shoe is:
P @ shoe = 12,500' x 13.6ppg x 0.052 = 8,840 psi

A column of 0.15 psi/ft gas yields:
P @ ML = 8,840 - 0.15 x 7,419' = 7,727 psi
P @ surf = 8,840 - 0.15 x 12,500' = 6,965 psi

The frac pressure at the 13.625 shoe is:
P @ shoe = 15,300' x 14.7ppg x 0.052 = 11,695 psi

A column of 0.15 psi/ft gas yields:
P @ ML = 11,695 - 0.15 x 10,219' = 10,162 psi
P @ surf = 11,695 - 0.15 x 15,300' = 9,400 psi

MASP - Bottom Hole Pressure Method

The bottom hole pressure at 15,300' TVD is:
P @ TD = 15,300' x 12.9ppg x 0.052 = 10,263 psi

A column of 50% gas & 50% liquid back to surface gives:
P @ surf = 10,263 - 0.5 x 15,300' x 0.15 psi/ft
- 0.5 x 15,300' x 13.1ppg x 0.052 = 3,905 psi

Using 50% gas and 50% liquid from ML to surface, the mudline pressure is:
P @ ML = 3,905 + 0.5 x 5,081' x 0.15 psi/ft
+ 0.5 x 5,081' x 13.1ppg x 0.052 = 6,016 psi

The bottom hole pressure at 20,200' TVD is:
P @ TD = 20,200' x 14.0ppg x 0.052 = 14,706 psi

A column of 50% gas & 50% liquid back to surface gives:
P @ surf = 14,706 - 0.5 x 20,200' x 0.15 psi/ft
- 0.5 x 20,200' x 14.2ppg x 0.052 = 5,733 psi

Using 50% gas and 50% liquid from ML to surface, the mudline pressure is:
P @ ML = 5,733 + 0.5 x 5,081' x 0.15 psi/ft
+ 0.5 x 5,081' x 14.2ppg x 0.052 = 7,990 psi

MASP (at surface)

MASP for 16 Casing = 3,905 psi
Worst Case MASP = 5,733 psi, rounded up to 5,800 psi

MASP for 13.625 Liner = 5,733 psi

Test Pressure

MASP at the wellhead (based on the liner) + 500 psi is:
P @ ML = 7,990 + 500 = 8,490 psi
The maximum test pressure with 11.8 ppg mud is:
P @ surf = 8,490 - 5,081' x 11.8 ppg x 0.052 = 5,372 psi
At the casing shoe, external pressure is:
Po @ shoe = 12,500' x 9.0 ppg x 0.052 = 5,850 psi
The test pressure is limited to 70% of the 16" MIYP:
P @ surf = 0.7 x 6,660 + 5,850 - 12,500' x 11.8ppg x 0.052 = 2,842 psi

For the liner, MASP at the wellhead + 500 psi is:
P @ ML = 7,990 + 500 = 8,490 psi
The maximum test pressure with 13.1 ppg mud is:
P @ surf = 8,490 - 5,081' x 13.1 ppg x 0.052 = 5,029 psi
At the liner shoe, external pressure is:
Po @ shoe = 15,300' x 9.0 ppg x 0.052 = 7,160 psi
The test pressure is limited to 70% of the 13.625" MIYP:
P @ surf = 0.7 x 10,030 + 7,160 - 15,300' x 13.1ppg x 0.052 = 3,759 psi
Limiting the test pressure to 70% of the 16 Casing MIYP at 5,081' yields:
P @ surf = 0.7 x 6,660 - 5,081' x (13.1ppg - 9.0ppg) x 0.052 = 3,579 psi

The highest test pressure is 3,579 psi on 13.1 ppg mud, rounded up to 3,600 psi.

CONFIDENTIAL TREATMENT REQUESTED
BP-HZN-CEC008702
TREX 004751.0020

BP Gulf of Mexico - MMS APD Worksheet

Minimum Design Factors

The burst design factor is calculated as follows:

DF = MIYP / load, where the load is the differential pressure at either the top of the string or at the shoe

At the mudline, the internal pressure is the MASP at the wellhead

Internal pressure at 5,081' = 7,990 psi

External pressure at 5,081' = 5,081' x 8.6 ppg x 0.052 = 2,272 psi

DF = 6,660 / (7,990 - 2,272) = 1.16

At the 13.625 TOL, the internal pressure is the MASP at the wellhead + 7,119' of 50% gas and 50% mud

Internal pressure at 12,200' = 7,990 psi + 7,119' x [0.5 x 14.2 ppg x 0.052 + 0.5 x 0.15 psi/ft] = 11,152 psi

External pressure at 12,200' = 12,200' x 9.0 ppg x 0.052 = 5,710 psi

DF = 6,660 / (11,152 - 5,710) = 1.22

The minimum burst design factor = 1.16

The collapse design factor is calculated as follows:

DF = Collapse Rating / load, where the load is defined by replacing the lightest internal mud weight with seawater down to the mudline

At the mudline, the internal pressure is 5,081' of 8.6 ppg sea water

Internal pressure at 5,081' = 5,081' x 8.6 ppg x 0.052 = 2,272 psi

External pressure at 5,081' = 5,081' x 11.8 ppg x 0.052 = 3,118 psi

The API collapse pressure is 3,118 - 2,272 x [1 - 2 / (16 / 0.575)] = 1,009 psi

DF = 2,340 / 1,009 = 2.32

At the shoe, the internal pressure is 5,081' of 8.6 ppg sea water + 7,419' of 11.8 ppg mud

Internal pressure at 12,500' = 5,081' x 8.6 ppg x 0.052 + 7,419' x 11.8 ppg x 0.052 = 6,825 psi

External pressure at 12,500' = 12,500' x 11.8 ppg x 0.052 = 7,670 psi

The API collapse pressure is 7,670 - 6,825 x [1 - 2 / (16 / 0.575)] = 1,336 psi

DF = 2,340 / 1,336 = 1.75

The minimum collapse design factor = 1.75

The tension design factor is calculated as follows:

DF = Tension Rating / load, where the load is the hanging weight of the string in mud plus 100 kips overpull

This simplified tension uses the TVD hanging weight and a buoyancy factor of (65.5 - 11.8) / 65.5 = 0.820 for 11.8 ppg mud

Tension = (12,500' - 5,081') x 97 ppf x 0.820 = 590.0 kips

DF = 1,916.0 / (590.0 + 100 kips overpull) = 2.78

The tension design factor is 2.78

CONFIDENTIAL TREATMENT REQUESTED

TREX 004751.0021

BP Gulf of Mexico - MMS APD Worksheet

MASP - Frac Gradient Method

The frac pressure at the 13.625 Liner shoe is:

P @ shoe = 15,300' x 14.7ppg x 0.052 = 11,695 psi

A column of 0.15 psi/ft gas yields:

P @ ML = 11,695 - 0.15 x 10,219' = 10,162 psi
P @ surf = 11,695 - 0.15 x 15,300' = 9,400 psi

MASP - Bottom Hole Pressure Method

The bottom hole pressure at 20,200' TVD is:

P @ TD = 20,200' x 14.0ppg x 0.052 = 14,706 psi

A column of 50% gas & 50% liquid back to surface gives:

P @ surf = 14,706 - 0.5 x 20,200' x 0.15 psi/ft
- 0.5 x 20,200' x 14.2ppg x 0.052 = 5,733 psi

Using 50% gas and 50% liquid from ML to surface, the mudline pressure is:

P @ ML = 5,733 + 0.5 x 5,081' x 0.15 psi/ft
+ 0.5 x 5,081' x 14.2ppg x 0.052 = 7,990 psi

MASP (at surface)

MASP for 13.625 Liner = 5,733 psi
Worst Case MASP = 5,733 psi, rounded up to 5,800 psi

Test Pressure

MASP at the wellhead + 500 psi is:

P @ ML = 7,990 + 500 = 8,490 psi

The maximum test pressure with 13.1 ppg mud is:

P @ surf = 8,490 - 5,081' x 13.1 ppg x 0.052 = 5,029 psi

At the casing shoe, external pressure is:

Po @ shoe = 15,300' x 9.0 ppg x 0.052 = 7,160 psi

The test pressure is limited to 70% of the 13.625" MIYP:

P @ surf = 0.7 x 10,030 + 7,160 - 15,300' x 13.1ppg x 0.052 = 3,759 psi

The test pressure is also limited by the 16 Casing at 12,200'

P @ surf = 0.7 x 6,660 - 12,200' x (13.1ppg - 9.0ppg) x 0.052 = 2,061 psi

The highest test pressure is 2,061 psi on 13.1 ppg mud, rounded up to 2,100 psi.

CONFIDENTIAL TREATMENT REQUESTED

TREX 004751.0022

BP Gulf of Mexico - MMS APD Worksheet

Minimum Design Factors

The burst design factor is calculated as follows:

DF = MIYP / load, where the load is the differential pressure at either the top of the string or at the shoe

At the TOL, the internal pressure is the MASP at the wellhead + 7,119' of 50% gas / 50% mud

Internal pressure at 12,200' = 7,990 psi + 7,119' x [0.5 x 14.2 ppg x 0.052 + 0.5 x 0.15 psi/ft] = 11,152 psi

External pressure at 12,200' = 12,200' x 9.0 ppg x 0.052 = 5,710 psi

DF = 10,030 / (11,152 - 5,710) = 1.84

At the shoe, the internal pressure is the MASP at the wellhead + 10,219' of 50% gas and 50% mud

Internal pressure at 15,300' = 7,990 psi + 10,219' x [0.5 x 14.2 ppg x 0.052 + 0.5 x 0.15 psi/ft] = 12,529 psi

External pressure at 15,300' = 15,300' x 9.0 ppg x 0.052 = 7,160 psi

DF = 10,030 / (12,529 - 7,160) = 1.87

The minimum burst design factor = 1.84

The collapse design factor is calculated as follows:

DF = Collapse Rating / load, where the load is defined by replacing the lightest internal mud weight with seawater down to the mudline

At the TOL, the internal pressure is 5,081' of 8.6 ppg sea water + 7,119' of 13.1 ppg mud

Internal pressure at 12,200' = 5,081' x 8.6 ppg x 0.052 + 7,119' x 13.1 ppg x 0.052 = 7,122 psi

External pressure at 12,200' = 12,200' x 13.1 ppg x 0.052 = 8,311 psi

The API collapse pressure is 8,311 - 7,122 x [1 - 2 / (13.625 / 0.625)] = 1,842 psi

DF = 4,800 / 1,842 = 2.61

At the shoe, the internal pressure is 5,081' of 8.6 ppg sea water + 10,219' of 13.1 ppg mud

Internal pressure at 15,300' = 5,081' x 8.6 ppg x 0.052 + 10,219' x 13.1 ppg x 0.052 = 9,233 psi

External pressure at 15,300' = 15,300' x 13.1 ppg x 0.052 = 10,422 psi

The API collapse pressure is 10,422 - 9,233 x [1 - 2 / (13.625 / 0.625)] = 2,036 psi

DF = 4,800 / 2,036 = 2.36

The minimum collapse design factor = 2.36

The tension design factor is calculated as follows:

DF = Tension Rating / load, where the load is the hanging weight of the string in mud plus 100 kips overpull

This simplified tension uses the TVD hanging weight and a buoyancy factor of (65.5 - 13.1) / 65.5 = 0.800 for 13.1 ppg mud

Tension = (15,300' - 12,200') x 88.7 ppf x 0.800 = 220.0 kips

DF = 2,393.0 / (220.0 + 100 kips overpull) = 7.48

The tension design factor is 7.48

CONFIDENTIAL TREATMENT REQUESTED

TREX 004751.0023

MC 252 #1 - Macondo Prospect

MMS APD Attachment - PP/MW/FG

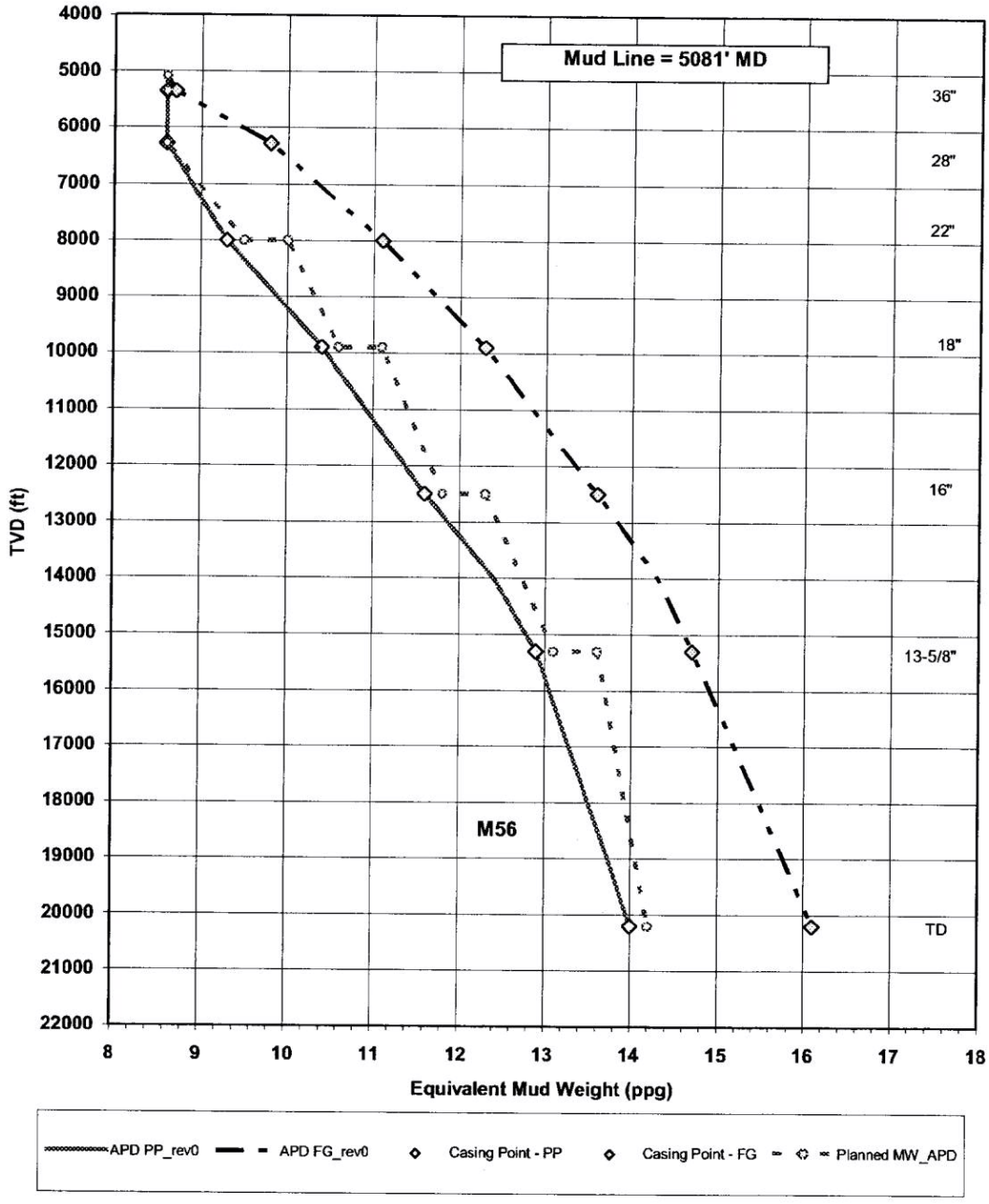

MC 252 #1
OCS-G-32306
Attachment 2

Mark Hafle
5/11/09

Departures to Code of Federal Regulations (23-Feb-03 Edition)

250.423 (b)	The conductor casing (28") will not be tested to 200 psi as the subsequent open hole section will be drilled riserless.
250.433(b)	Partial closing of the diverter sealing element shall be considered to be an actuation test. Full closure actuation will be conducted in conjunction with regular scheduled BOP testing. The vent lines will not be flow tested and the system will not be pressure tested per the subject regulation.
250.445(g)	A safety valve will not be on the rig floor for the casing being run unless the casing string length results in the casing being across the blind/shear rams prior to crossing over to the drill pipe running string.
250.447(b)	The 14-day BOP pressure test is not required for blind shear rams. The blind shear rams and the wellhead connector will be tested to the casing pressure tests as specified in the APD during casing tests such that code requirement of 250.449(e) is met.
250.447(c)	The BOP's will be pressure tested every 14 days. The BOP test before drilling out each casing string and/or liner shall not be expressly required, except that the 14-day pressure test must be valid. This applies to the following casing strings: ➢ 18" Liner ➢ 16" ➢ 13 5/8" Liner ➢ contingency liners
250.448 (b & c)	The subsea BOPs will *not* be pressure tested to 15K psi rated working pressure, and the annular will *not be* tested to 70% of its rated working pressure, on the test stump, or after installation. We propose that the single ram type BOPs shall be stump-tested to 10,000 psi and the annular-type BOPs shall be stump-tested to 5,000 psi. Thereafter, test pressures will be per the APD. The blind/shear rams will not be pressure tested to their rated working pressure upon installation or during subsequent tests. The blind/shear rams will be tested to the casing test pressures as specified in the APD. The upper inner and outer annular bleed valves will *not* be pressure tested to their rated working pressure. A pressure test of the upper inner and outer bleed valves will be performed against the annular BOP to the annular test pressure specified in the APD.

250.449 (f)	Request not to test on 6⅝" casing landing string during BOP tests. During drilling operations 6⅝" drill pipe will be used above the BOP stack (it will never go into or below the BOP stack). The remainder of the string will be made up of 5½" drill pipe (From the BOP stack down). However to land the heavy 22" and 16" casing stings, a 6⅝" drill pipe landing string will be used. Once the casing is landed and cemented, the 6⅝" drill pipe will be across the BOP stack (for approximately 12 hours). There will be no drilling ahead with the 6⅝" drill pipe in or below the BOP stack. Both 5½" drill pipe and 6⅝" drill pipe will be tested during the stump test, prior to running the BOP stack.
250.449 (f)	Variable bore-pipe rams will be pressure tested against largest and smallest sizes of pipe that will be across the stack, excluding drill collars, HWDP, and bottom-hole tools. The annular BOP will only be tested to the smallest OD drill pipe when a tapered string is in use.
250.449(h)	Request to delay or omit 7-day function test of Blind/Shear and casing shear rams, when function test is due and the drill string is across the stack. The maximum time between function tests shall not exceed 14 days, unless authorized by the MMS district office on a case by case basis.
250.461 (a)(2)	In the event a directional MWD is run, a multi-shot (or single-shot) survey shall not be required at casing points or TD.

MC 252 #001 is a straight hole.

DATE	
OPERATOR	B P
LOCATION	MC252
WELL NAME	Macondo
WATER DEPTH	4992 Ft
RKB to Waterline	89
RKB TO MUDLINE	5081 Ft
RKB TO WELLHEAD	5071 Ft
Ht ML to WELLHEAD	10 Ft
WELLHEAD TYPE	Vetco
CONNECTOR TYPE	H4 E x F

Marianas

Drill & Comp

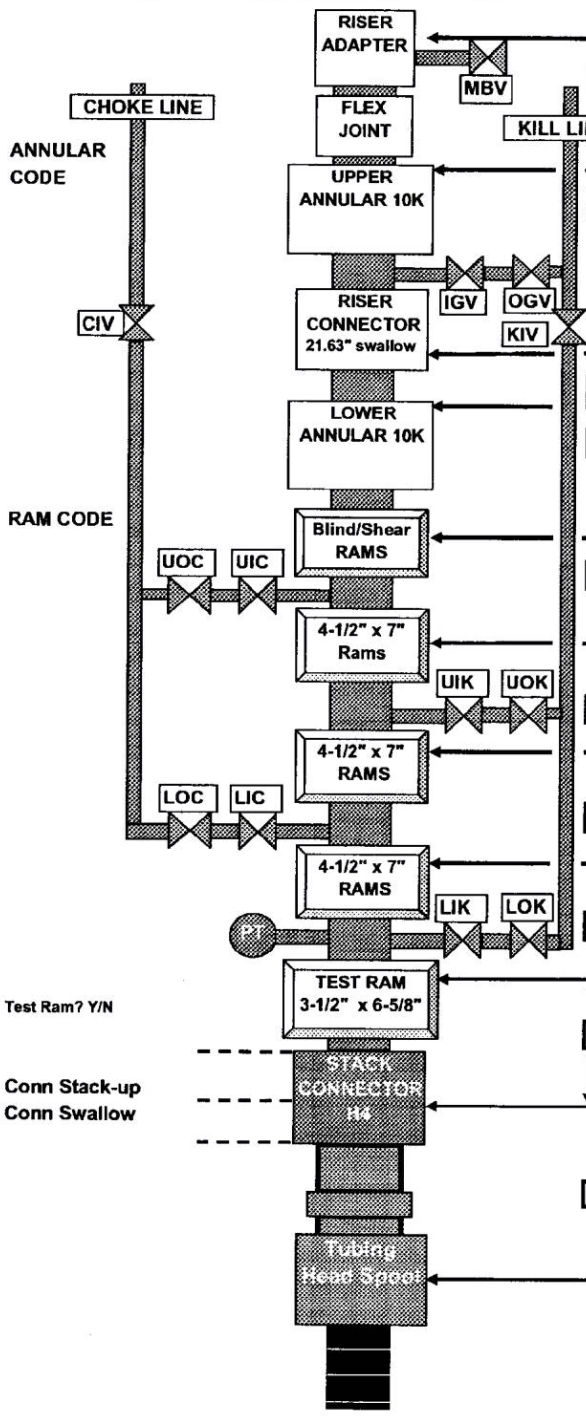

Ram Cavity Elev (Inches)	Spaceouts (inches)	Elev. From BOP Conn face (Inches)		Drilling	Completion
			RKB to Waterline		
		521.06	Riser Adptr Shoulder	5027.58	5027.58
521.06	120.50				
		400.56	Top of Element	5037.62	5037.62
400.56	43.75				
		382.24	Bottom of Element	5039.15	5039.15
		356.810	Top of Adptr Spool	5041.27	5041.27
356.81	86.81				
		270.000	Top of Element	5048.50	5048.50
270.00	67.97				
		251.680	Bottom of Element	5050.03	5050.03
		202.030	Top of Ram Cavity	5054.16	5054.16
202.03	41.00				
		191.030	Btm of Ram Cavity	5055.08	5055.08
		161.030	Top of Ram Cavity	5057.58	5057.58
		156.492	Top of Ram Packer	5057.96	5057.96
161.03	46.94	153.216	Btm of Ram Packer	5058.23	5058.23
		150.030	Btm of Ram Cavity	5058.50	5058.50
		114.090	Top of Ram Cavity	5061.49	5061.49
		109.552	Top of Ram Packer	5061.87	5061.87
114.09	28.12	106.276	Btm of Ram Packer	5062.14	5062.14
		103.090	Btm of Ram Cavity	5062.41	5062.41
		85.970	Top of Ram Cavity	5063.84	5063.84
		81.432	Top of Ram Packer	5064.21	5064.21
85.970	48.03	78.156	Btm of Ram Packer	5064.49	5064.49
		74.970	Btm of Ram Cavity	5064.75	5064.75
		37.940	Top of Ram Cavity	5067.84	5067.84
		34.760	Top of Ram Packer	5068.10	5068.10
37.940	37.94	30.030	Btm of Ram Packer	5068.50	5068.50
		26.410	Btm of Ram Cavity	5068.80	5068.80
		0.000	Btm of BOP Conn.	5071.00 (DATUM)	5071.00

Elev. From RKB (ft): W/O THS | with THS

Tubing Head Spool height (in)

Top of Wellhead	5071.00	5071.00 (DATUM)
RKB to Mudline	5081.00	5081.00

Douglas, Scherie D

From: Labiche, Lance [Lance.Labiche@mms.gov]
Sent: Wednesday, May 13, 2009 9:07 AM
To: Douglas, Scherie D
Cc: Powers, Jane; Patton, Frank; Trocquet, David; Labiche, Lance
Subject: Mooring approval for BP at MC 252 - Marianas

Scherie,
We have reviewed the mooring application submitted for the *Transocean Marianas* at Mississippi Canyon Block 252. MMS will allow the *Transocean Marianas* to be on the MC 252 location through August 15, 2009, with the mooring system proposed in Intermoor's mooring report dated April 29, 2009 and Delmar's mooring risk assessment dated April 29, 2009 (#4128-RA-0). This approval is conditional on the following:

- All of the mooring components have current inspection records and there are no documented defects/damages to any of the equipment.
- Anchors will be installed according to the installation plan.
- BP will contact the MMS New Orleans Drilling engineer (Frank Patton) on August 1, 2009, to discuss the progress of the well and the projected schedule. If, at the time of this progress report, it looks as though you will not meet the August 15, 2009 move-off date, you will be directed to secure the well and move off location. You will also provide to him how long it will take to secure the well and move off location, including the name of the vessels that will be conducting this work. [Note: If BP believes that there is not a sufficient weather window to safely move the rig off of this location and on to the next location, you should provide sufficient information to the MMS New Orleans Drilling Engineer and discuss this with him. MMS does not want a moored rig without all of its mooring system to be on location during a tropical storm event.]
- A detailed configuration listing all of the mooring equipment as installed in the mooring lines must be submitted to either Lance Labiche or Jane Powers once the rig is moored on location.
- If the mooring system sustains any damage during the 2009 hurricane season you must recover the damaged components and conduct a detailed investigation to determine the failure mechanism/mode of the damaged components.
- Please attach this email along with the report and risk assessment to your Ewell submittal.

Thanks,

Lance Labiche
Petroleum Engineer
MMS, Office of Safety Management
Phone: (504)736-2433
lance.labiche@mms.gov