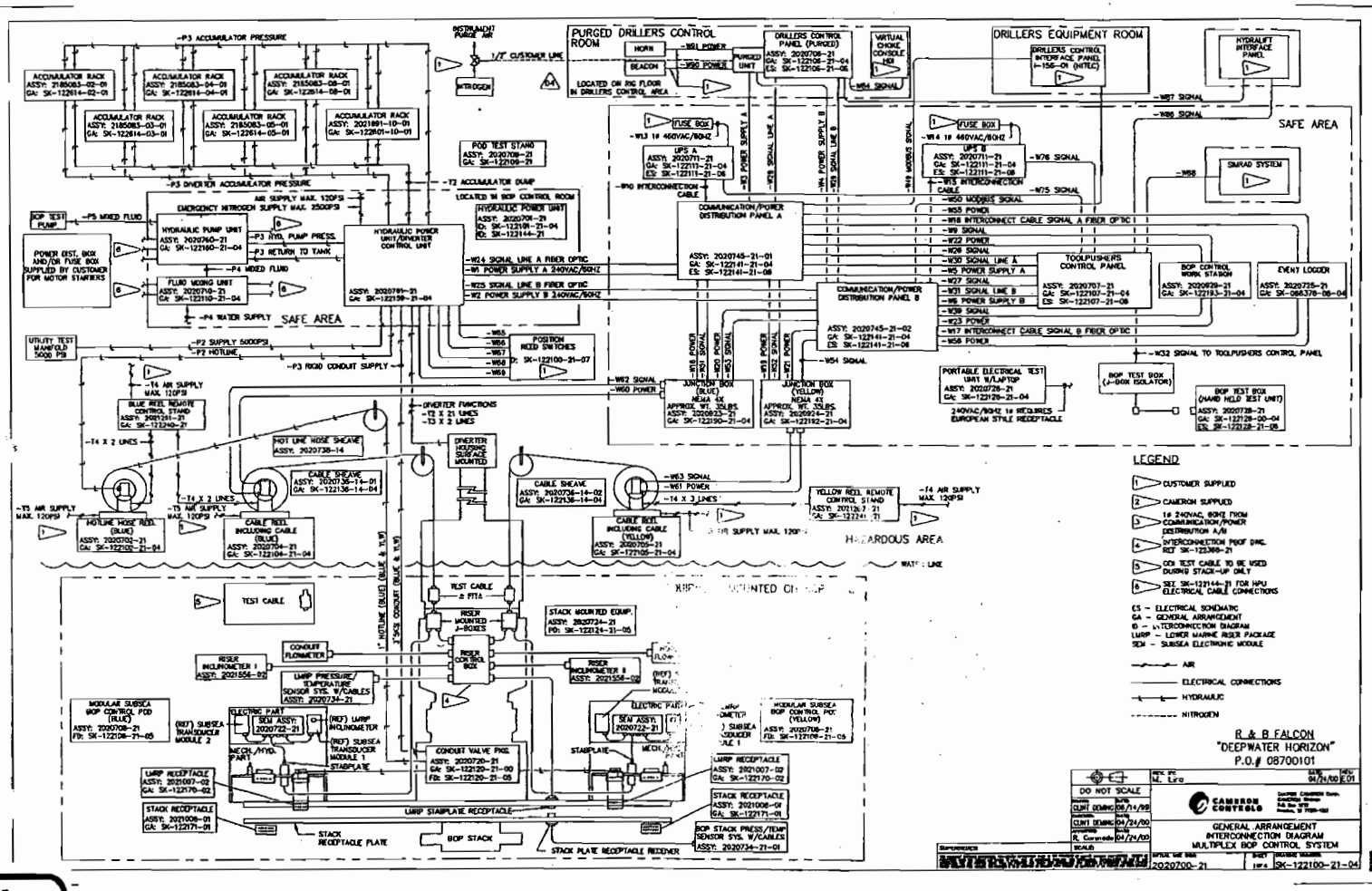

Exhibit No. 8037
Worldwide Court Reporters, Inc.

eatment Requested by Transocean Holdings LLC