RISK ASSESSMENT OF THE DEEPWATER HORIZON BLOWOUT PREVENTER (BOP) CONTROL SYSTEM

April 2000 – Final Report

Prepared for:

CAMERON CONTROLS CORP.

4275
Exhibit No. _____
Worldwide Court Reporters, Inc.

EQE INTERNATIONAL

Confidential Treatment Requested by Transocean Holdings LLC

CAMERON

087
HORIZON

139

This book is a part of the
CER Library.
Do Not Remove

Rev. 12
04-13-00

4117

RB Exploration – Houston Project Office
RBS8D Vendor Data
Interdiscipline Check Routing Form

Vendor: Cameron	Date Received: 5/11/00	Date Returned to Doc. C: 6/13/00	IDC No:
PO: 087-00101	Date Required: (+10 Days) 5/24/00	R&B Transmittal 4068	D324
PM Code: 139			

SEE ATTACHED DOCUMENT LIST

Record the date the document is received and date and initial when you have completed your review. Also, initial on the documentation. Pass the documentation to the next individual indicated on the routing order. The last person to review will deliver the document to Document Control. Original mark-ups will be retained in the files; a copy will be transmitted to HHI

Info Only	Review Required	Route	Discipline	Name	Loc.	Date in	Date out	Initials
			Proj. Mgr.	Lindsay Clark	Site			
copy			Ulsan Proj. Team		Site			
			Eng. Mgr.	Dan Farr	Hou			
			Proj. Engr. Mgr.	Russ Krohn	Hou			
Copy			Vastar	W. Cole	Hou			
			IHI	Y. Awashima	Tok			
copy			HHI	D. Y. Kim	Site			
Copy		5	Rig Mgr.	Kevin Wink	Hou			KB
		6	Drilling / Subsea	Drew Weathers	Hou		6/12/00	DAW
				Al Cotten	Hou			
				Matt Goulet	Hou			
			OIM	Joe Jameson	Hou			
			OIM	Ken Reed	Hou			
		~~4~~	Electrical	John May	Hou		[illegible]	
		4		Ben Tillison	Hou		6/12	BT AW
				Randy Denton	Hou			
			Naval Arch/ Mooring	Bill Ambrose	Hou			
			Structure / Hull System	Joe White	Hou			
		3	Chief Engineer	Nick Brackett	Hou	5-31-00	6-9-00	NBB
			Captain	Richard Simpson	Hou			
			Captain	Brent Young	Hou			
		2	Mech. Sup.	Kennedy, Richard	Hou	5/30/2000	5/30/2000	[illegible]
		1	E. T.	Spicer, Richard	Hou	5-25-00	5-30-00	[illegible]
T+D			Purchasing	Mellissa Gentry	Hou			

Brief Summary of Comments (Note: Actual comments are included on the drawings. Please note any interface issues that may impact other documents.)

T = Transmittal only
D = Documents

Why is there NO evaluation of possible software faults? BT

RISK ASSESSMENT OF THE DEEPWATER HORIZON BLOWOUT PREVENTER (BOP) CONTROL SYSTEM

April 2000 – Final Report

☐ 1. Approved-No Comments	Date Received
☒ 2. Approved-See Comments	Received By
☐ 3. Disapproved-See Comments	Date Reviewed 4/12/00
☐ 4. Received-No Action Taken	Reviewed By ASA
Houston File Location	

NOTE: Drawing approval does not relieve Bidder of responsibility to comply with its contractual requirements, to insure compatibility of this drawing with other drawings and to correct any errors or omissions discovered subsequently. All deviations from contractual requirements must be specifically noted as such.

See IDC transmittal Sheet Ben Tillison Comments

Prepared By:

Marc D. Quilici
Eric J. Jorgenson
EQE International
Seattle, Washington

Project #:

P.O. #: 087-00101

Comp. #: 139

Prepared for:

CAMERON CONTROLS CORP.
Houston Texas

MAY 11 2000

EQE Project Number: 253150

Notice: Proprietary Rights Involved

This document and all accompanying information and data are and remain the property of Cameron Controls, and are not to be copied, recopied, reproduced, nor transmitted or disclosed to others without express permission and are to be returned upon request therefor, all rights in proprietary and novel feature of the subject matter are expressly reserved by Cameron Controls, recipients's agreement to the foregoing is indicated by acceptance of this document.

Confidential Treatment Requested by Transocean Holdings LLC TRN-HCEC-00056394

TABLE OF CONTENTS

Page

TABLE OF CONTENTS iii

1. INTRODUCTION 1

2. FAULT TREE ANALYSIS 4

3. DESCRIPTION OF THE MODEL 7

3.1 TOP LOGIC 8

3.2 ASSUMPTIONS 9

3.3 DATA 12

4. EVALUATION RESULTS 37

5. OBSERVATIONS 42

APPENDICES

A Fault Tree Model Printout

B Data

C Cutset Listings

D Importance Analysis Results

Confidential Treatment Requested by Transocean Holdings LLC TRN-HCEC-00056395

1. INTRODUCTION

Cameron Controls is developing and building a blowout preventer (BOP) control system under contract to R & B Falcon Drilling. The BOP is designed for deepwater drilling operations up to 10,000 feet below sea level and is to be installed on the Deepwater Horizon. EQE was contracted by Cameron to conduct a risk assessment of the BOP system. The risk assessment was developed to identify any reliability concerns and rank the contributors to system unavailability based on their likelihood of occurrence.

This report documents the analyses of the Cameron BOP control system to function properly on demand. The analyses were performed using a quantitative method, Fault Tree Analysis.

The fault tree analysis of the BOP control system design uses boolean logic fault tree models which were developed for each of the various portions of the system. The model was evaluated using the SAPHIRE fault tree computer code. The results of this evaluation are an identification of the combinations of equipment failures, operator errors, and/or environmental conditions, which if they occur will lead to failure of the BOP to perform its desired function. Each of these combinations is called a "cutset" and each cutset represent one minimal grouping of failures leading to the undesired failure state.

This quantified fault tree model of the BOP control system also evaluates the probability of failure on demand of the modeled system. This probability of failure is largely site independent, although specific environmental conditions could have some impact on the results. In order for the model to be useful, it is important that the details of the BOP control system configuration be accurately reflected. While generic data for BOP control systems are available in the OREDA database at a high level, a fault tree analysis performed for the specific BOP control system design provides a more accurate picture of system reliability. The results also allow a more detailed exploration of the system design to determine potential weak areas in the design with respect to reliability.

The undesired BOP failure states included in the risk assessment were defined and agreed upon during discussions between Cameron and EQE. These undesired

Confidential Treatment Requested by Transocean Holdings LLC TRN-HCEC-00056396

events form the definition for the fault tree models developed. These events are defined as failure of the system in such a manner as to result in potentially severe environmental damage and/or significant danger to personnel safety. The specific events and subevents examined by the analysis are:

1. Failure to perform the critical functions of the emergency disconnect sequence (EDS) are examined as a single event as well as individually, including:

   - Failure to close the blind shear ram,
   - Failure to close the casing shear ram (if casing is in the stack),
   - Failure to disconnect the riser from the stack,
   - Failure to close the upper and lower choke lines,
   - Failure to close the upper and lower kill lines.

2. Failure to adequately perform well control operations, including:

   - Failure to close the upper and lower annular,
   - Failure to close shear rams and the pipe rams,
   - Failure to open the applicable upper or lower choke lines, or
   - Failure to open the applicable upper or lower kill lines.

The fault tree models and FMEA were developed based on design and operational information provided by R & B Falcon and Cameron Controls. The risk assessment includes:

1) the electro-hydraulic system necessary to perform the EDS and well control functions up to but not including the ship's hydraulic supply to the subsea units;

2) the yellow and blue pod subsea electronic modules, each containing two redundant sets of electronics which control the position of the electro-hydraulic valves;

3) the modems and multiplex cables used to transmit the signals from the surface to the subsea electronic modules;

4) the communication and power distribution cabinets;

5) the Driller's and Toolpusher's control panels;

Confidential Treatment Requested by Transocean Holdings LLC TRN-HCEC-00056397

6) the CCU Workstation;

7) the uninterruptible power supply (UPS) up to but not including the ship's supply buses.

The electro-hydraulic models were developed at the component level of detail, e.g., solenoid operated pilot valve, hydraulic operated inner choke valve, pressure regulators, etc. The electronics portions of the models were typically developed at the board level of detail. All other portions of the model were developed at the component level of detail. Human errors were included in the model for failing to perform various necessary actions such as initiating the emergency disconnect sequence, switching to the backup electronics pod in the event of a failure of the active pod, or actuating individual components in those cases where the EDS is not present.

This report summarizes the development of the fault tree model and the results obtained from its evaluation. Section 2 is a short summary of the fault tree analysis analytical tool. Section 3 provides a specific description of the fault tree model, including the top events developed, the data used to evaluate the model, and key assumptions used in the model development. Section 4 summarizes the results obtained from the fault tree model evaluation. Section 5 provides a summary of observations that can be drawn from the evaluation results. The graphical printout of the fault tree model, the data used in the evaluation, the failure cutset listings, and the importance measure calculations are provided in the appendices in their raw form.

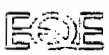

Confidential Treatment Requested by Transocean Holdings LLC TRN-HCEC-00056398

2. FAULT TREE METHODOLOGY

Fault tree analysis is an analytical tool that uses deductive reasoning and a graphical depiction of that reasoning process to determine the various failure event combinations, which if they occur, lead to the occurrence of an undesired event. It is a structured, systematic approach that can be used to evaluate a single system or multiple systems and account for system interactions. Fault tree analysis is a tool that can be used to develop both qualitative and quantitative results.

The fault tree model is developed from logic gates, which are graphic representations of Boolean AND and OR operators, and basic events which are analogous to individual failures. The graphical symbols seen in Figure 2-1 are the symbols most often used in fault tree analysis. These symbols are AND Gate, OR Gate, Transfer, and Basic Event. These symbols and their definitions are discussed below.

OR GATE (SEE SYMBOL LABELED OR-GATE)

A Boolean logic operator with one or more inputs which is true if any of the inputs to the gate are true. For example, in the figure below, if any of the basic events, BASIC-EVENT-2, BASIC-EVENT-3, or BASIC-EVENT-4 which are input to the OR gate occur, the OR gate is considered to occur.

AND GATE (SEE SYMBOL LABELED AND-GATE)

A Boolean logic operator with one or more inputs which is true if all the inputs to the gate are true. For example, in the figure below, if the basic event (labeled BASIC-EVENT-1) and the OR gate occur, the AND gate is considered to occur.

Confidential Treatment Requested by Transocean Holdings LLC TRN-HCEC-00056399

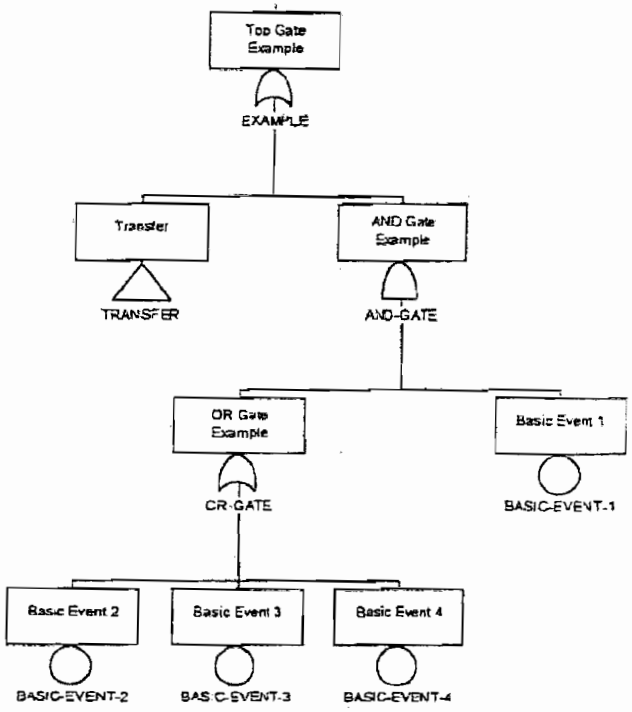

Figure 2-1 - Fault Tree Graphical Symbols

TRANSFER (BOX WITH A TRIANGLE BELOW - SEE SYMBOL LABELED TRANSFER)

Convenience for the analyst which denotes that this event is described in more detail in another place within the model (e.g., another page).

BASIC EVENT (BOX WITH A CIRCLE BELOW - SEE SYMBOLS LABELED BASIC-EVENT-X)

This symbol represents a basic component failure, human error, or maintenance unavailability. These events are representative of the lowest level of resolution in the model. Each basic event has an associated probability of failure associated with it if quantitative results are desired.

Confidential Treatment Requested by Transocean Holdings LLC TRN-HCEC-00056400

The development of the fault tree model begins by identifying the undesired condition to be examined, commonly referred to as the top event. This event may be defined as broadly or as narrowly as desired but this event definition sets the bounds of the analysis so care must be taken. This event is usually defined as failure to achieve a desired goal for example, "Failure to perform an emergency disconnect". Once the top event is defined, the analyst performs a systematic review of each small piece of the system to determine how that event can happen, either in terms of basic events (e.g., Failure of the upper shear ram to shear the pipe) or in terms of other broader events (e.g., Failure of hydraulic supply to the upper shear ram). These broadly defined events are usually represented by AND or OR logic gates which are then examined in the same manner as the top event. The modeling process continues until all of the broad events are defined in terms of basic events and the associated logic gates. The fault tree logic model is then evaluated to determine the possible combinations of basic events that will result in occurrence of the top event. These possible combinations are referred to as cutsets. The cutsets may be qualitative in nature if no failure data is applied or quantitative if failure data is applied depending upon the desired goal of the analysis.

Confidential Treatment Requested by Transocean Holdings LLC TRN-HCEC-00056401

3. FAULT TREE ANALYSIS

The fault tree model was developed to represent system functions that are required to successfully shut-in the well and disconnect the LMRP. These functions are included in the EDS and are intended to ensure personnel safety and isolation of the well to preserve the environment. Well control functions, including operation of choke and kill valves and the hydraulic supplies for closure of the upper and lower annulars and the shear and pipe rams were also modeled.

Systems, equipment and components that are necessary to accomplish an EDS were modeled from the individual hydraulic supplies to the BOP Stack components back through the entire system to the ship electrical and hydraulic supply. Estimated failure rates were included in the model to achieve an understanding of the relative importance of failure combinations. Reliability of operators, where human actions are necessary, was also modeled. Common cause failures (CCFs) are failures which, as the name implies, arise from common causes. Since these events have historically been found to occur with a higher likelihood of occurrence than independent failures of similar components, they tend to become important in highly redundant systems. In this modeling effort, CCFs were included in the model for failures of CPU boards, fuses, modems, and power supplies. These CCFs were postulated for multiple identical components that are in similar environments. For example, CCFs were included for failure of both CPU boards in a single pod and for failure of all four CPU boards in the blue and yellow pods. No CCFs were included for components which are in different physical locations and environments. Although a case may be made for some potential for CCFs in these cases, they are in non-redundant sets of components within the same signal flow path and therefore do not significantly affect the system reliability.

In order to focus on the equipment necessary to perform the EDS and Well Control operations, simplified block diagrams were developed for the electronic portions of the system. These block diagrams were developed from the detailed electrical schematics for the Driller's Panel, the Toolpusher's Panel, the CCU Workstation, the Communication/Power Distribution Cabinets, and the Subsea Electronic Modules and their accuracy was verified by the applicable Cameron personnel. The block diagram representations of the electronic portion of the control system formed the

Confidential Treatment Requested by Transocean Holdings LLC TRN-HCEC-00056402

basis for the fault tree model and are shown in Figures 3-1 through 3-11. Table 3-1 identifies the modeled configuration for solenoid/connector assumed assignments.

A description of fault tree top logic, model assumptions, and input data are discussed in Sections 3.1, 3.2, and 3.3, respectively.

3.1 TOP LOGIC

Top logic for the fault tree was defined based on the successful operation of an EDS: closure of the upper or lower shear ram, riser disconnect, opening the upper annular, and isolation of the choke and kill valves. Closure of the upper or lower shear ram will isolate the riser as well as cut the drill string for separation from the BOP Stack. Riser disconnect will allow separation of the riser from the stack. Opening of the upper annular will facilitate separation of the riser (and drill ship) from the stack. Isolation of the Choke and Kill lines along with closure of the shear ram will isolate the well to prevent the release of well contents to the environmental. These same functions are also modeled in a top logic model for a planned disconnect.

The probability of successful operation of these functions is modeled by the following failure to operate BOP fault tree top logic:

- Failure to close the blind shear ram
- Failure to close the casing shear ram if casing is present
- Failure to disconnect the riser from the stack
- Failure to isolate the upper and lower choke lines
- Failure to isolate the upper and lower kill lines

A separate model top logic was developed to evaluate the probability of failure of the essential well control functions and consisted of the following:

- Failure to close the blind shear ram, or failure to open the upper or lower choke lines or the upper or lower kill lines, or close the upper and lower annulars
- Failure to close the pipe rams, or failure to open the available upper or lower choke lines and the upper or lower kill lines, or close the upper and lower annulars

Confidential Treatment Requested by Transocean Holdings LLC TRN-HCEC-00056403

3.2 ASSUMPTIONS

Generation of fault tree models in order to gain a quantitative understanding of the system reliability and governing failure combinations, required a number of important assumptions. Assumptions were established during development of the model based on the following:

- Definition of Undesired Events
- System Operational Functional Description
- Inputs/Outputs for Each Component
- System Design/Operational Requirements
- Monitored Parameters and Associated Instrumentation Which Identify Need for Actuation
- Maintenance/Testing Practices, Frequencies, and Philosophies

The above information was compiled based on hydraulic, electrical, instrumentation, and control system drawings as well as interviews with R&B Falcon and Cameron staff. Access to information from the Cameron Project Manager and engineers responsible for various aspects of the system was provided to the analysis team.

Resulting key model boundary conditions and assumptions follow:

1. EDS failure is defined as failure to close blind shear ram or failure to close the casing shear ram when casing is in the hole or failure to disconnect riser or failure to open upper annular or failure to isolate choke or failure to isolate kill.

2. Well control failure is defined as failure to seal using the blind shear ram or any one of the three pipe rams or failure to open any applicable choke or kill paths or failure to close the upper and lower annular.

3. The EDS1 and EDS2 sequences are taken into account in the model by accounting for the fraction of the time that casing or a tool joint is in the stack. The human error for failure to initiate EDS is considered to include the proper mode selection. An estimate of 5% of the time was made that the casing shear ram is required. This estimate is felt to be conservative.

Confidential Treatment Requested by Transocean Holdings LLC TRN-HCEC-00056404

4. The casing shear ram is not considered to be a redundancy to the blind shear ram due to its inability to seal the well in.

5. It is assumed that the pressure regulators do not require either an increase or decrease signal during the period of operation of critical functions.

6. It is assumed that the stack accumulator charge signal is active during normal pod operation.

7. Unlock of the choke and kill connectors is not required for successful riser disconnect.

8. Closure of the inner and outer bleed valves is not required for successful EDS.

9. All components are assumed to be designed with sufficient margin, and of sufficient quality, ("i.e., "fit for service") to fit their intended applications.

10. Although retraction of stabs is a desirable function to avoid hardware damage, retraction was not included in the model because failure of retraction would not prevent disconnect and there would be no significant personnel or environmental hazard associated with failure.

11. Closure of the choke and kill isolation valves are not required for successful EDS operation.

12. The blue pod is normally in operation and the yellow pod is in standby. Although pod operation is rotated on a weekly basis, the model was developed for one configuration. Due to symmetry between the pods, the results are not impacted with the exception of the dominance of blue pod components. The importance of each failure identified associated with the blue pod components is equivalent for the yellow pod.

13. Failures associated with the cable reels are assumed to be covered in the cabling.

14. Since it is allowable to continue drilling with one train of POD electronics unavailable due to failures it is important to account for these partial failures. An overall POD electronics train unavailability due to prior failure is estimated to be 3.3E-1/drilling operation (1 failure in 3 drilling operations) in order to account

Confidential Treatment Requested by Transocean Holdings LLC TRN-HCEC-00056405

for the potential operation with one train of electronics failed within a POD. This is estimated by a failure rate of 3.18E-5/hr * 21 components * 45 days/drilling operation.

15. Failure of the "deadman" system (DMS) is conservatively not modeled for EDS. Spurious operation is considered to be statistically negligible based on the number of required failures necessary for spurious operation.

16. The solenoid cables to be used in the system are assumed to be "fit for purpose" and are not included in the model due to low cable failure rates for appropriate cable and the limited impact of single failures.

17. The pod bulkhead connectors are assumed to be more likely to leak with one or more of the pie connector plugs disconnected due to the lower open face pressure rating of the connector.

18. Failure of an isometer in one of the Communication/Power Distribution Panels can only isolate one pod.

19. The CCU workstation was not modeled in detail due to a lack of design information. The communication with the CCU Workstation was modeled however.

20. Both the blue and yellow hydraulic signals for opening the blue and yellow pod hot line supplies are always active.

21. If both the open and close (latch and unlatch) pilot signals are applied to a three position hydraulic operated valve, the actual position is indeterminate and the valve is assumed to fail.

22. The hot lines are assumed to be a redundancy to the rigid conduit for hydraulic supply. Although the operation of components will be slower, all the required functions can be operated and the largest consumers also have accumulator back up.

Confidential Treatment Requested by Transocean Holdings LLC TRN-HCEC-00056406

23. The upper and lower annular are completely redundant for well control operations.

3.3 DATA

Fault trees were developed using the computer code SAPHIRE, a risk analysis software package developed by Idaho National Engineering Laboratory (INEL) contractors for probabilistic analyses of nuclear power and nuclear weapons facilities. The resulting model includes almost 1800 logic gates and approximately 750 basic events.

Failure rates were assigned to the basic events based on the OREDA-92 and OREDA-97 offshore reliability databases, a combination of published data compiled for the nuclear industry, published data compiled for military applications, discussion with Cameron engineers, experience of the analysts, and engineering judgment.

Where available and in sufficient detail, data from the OREDA databases was preferentially used. In some cases however, either the data was unavailable for specific components or the data could not be broken down to the model level of detail. In these cases, other published data was used to estimate failure rates for components that are similar in type and function to standard hardware (solenoid valves, hydraulic valves, cable, etc.). It is recognized that hardware designed for the BOP service environment is not typical of industrial or military grade equipment. Although the service conditions for the subsea components is severe, many design features have been added to minimize the potential for environmental conditions to impact the reliability of the BOP. These data sources are therefore considered.

Most of the component failure rates used in the quantification of the overall failure probability are time-dependent. Most of the components are in the standby state during the majority of the drilling operation. The component failure probabilities for standby components with periodic testing are calculated from the following equation:

$$P = 1 + (e^{[-\lambda\tau]} - 1) / (\lambda\tau)$$

Confidential Treatment Requested by Transocean Holdings LLC TRN-HCEC-00056407

Where: λ = time dependent failure rate

τ = test interval

The test intervals associated with the various components were based on an estimate of how often the components would be demonstrated to be operable. In general, 4 time periods were used. Main power supply breakers and transformers would be expected to be monitored continuously and are assigned a test interval of 1 hour, which is conservative. Components such as the rams are tested weekly and are assigned a test interval of 168 hours. Electronic components associated with the operating and standby pod are continuously monitored and are assigned a conservative test interval of 1 hour. Components associated with the standby pod which are not continuously monitored are assigned a test interval of 168 hours (1 week) based on the expected weekly rotation of operational pods. Components which would be tested only by an actual disconnect were assigned a 1000 hour test interval, estimating a conservative average of one planned and one unplanned disconnect per drilling operation. The UPS batteries are only needed if power is lost and therefore may only be infrequently load tested. The batteries are therefore assigned a test interval of 2920 hours (1/3 year).

Experience and judgment was the primary method for estimating failure rates for components with limited failure data (such as modems, optical link modules, workstations, and software). In such cases, conservative failure rates were entered to determine the overall effect on system reliability.

Failure rates for operators to take necessary actions were estimated based on all of the above, with sensitivity studies performed to gain an understanding of the importance of operator actions. Experience, training, and system indication are key elements to reliable operator actions.

Common cause events were quantified using the multiple greek letter (MGL) method. Based on the data in OREDA-97 for control logic units, approximately 7% of the failures were attributable to common cause failures. This was used as the beta factor, which when multiplied by the individual component failure rate estimates the likelihood of two similar components to fail due to a common cause. No data regarding the likelihood of more than two components to fail due to the same common cause is identified in the OREDA data. Based on experience gained

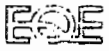

Confidential Treatment Requested by Transocean Holdings LLC TRN-HCEC-00056408

in the nuclear power industry, common cause failures of more than two components actually have occurred and have resulted in a significant contribution to overall unavailability. The likelihood of failure of a third similar component due to a common cause given failure of two components (delta) is estimated typically to be in the 20-30% range. For common mode failure of four or more components, given failure of three components due to a common mode (gamma), the estimate is typically in the 70-80% range. The failure of more than four components due to common causes given failure of four similar components due to common causes are typically assumed to be 100%. The specific details of the developed factors are shown in Table B-2 in Appendix B.

Basic events were named according to the convention AAA-BBB-CC-ZZZZZ where AAA is the system designator, BBB is the component type, CC is the failure mode, and ZZZZZ is a designator assigned to uniquely identify each event. A listing of basic events along with failure rates for each event are listed in Appendix B.

Confidential Treatment Requested by Transocean Holdings LLC TRN-HCEC-00056409

Table 3-1: Function/Connector Assignments							
No.	Train	Carrier Board (X)	Piggyback Board (Y)	Connector (Z)	Conn. No.	Plug	Horizon Component Signal
1	A	A4	A5	X19	1	A	85 - UIK Open
2	A	A4	A5	X19	1	B	86 - UIK Close
3	A	A4	A5	X19	1	C	87 - LOK Open
4	A	A4	A5	X19	1	D	88 - LOK Close
5	A	A4	A5	X19	1	E	
6	A	A4	A5	X19	1	F	
7	A	A4	A5	X20	2	A	
8	A	A4	A5	X20	2	B	
9	A	A4	A6	X20	2	C	
10	A	A4	A6	X20	2	D	
11	A	A4	A6	X20	2	E	
12	A	A4	A6	X20	2	F	
13	A	A4	A6	X21	3	A	
14	A	A4	A6	X21	3	B	12 - UA Preventer Close
15	A	A4	A6	X21	3	C	
16	A	A4	A6	X21	3	D	14 - LA Preventer Close
17	A	A7	A8	X21	3	E	15 - Blue Pod Hot Line Supply Open
18	A	A7	A8	X21	3	F	
19	A	A7	A8	X23	4	A	49 - Pod Select Pilot Open
20	A	A7	A8	X23	4	B	
21	A	A7	A8	X23	4	C	

Confidential Treatment Requested by Transocean Holdings LLC TRN-HCEC-00056410

Table 3-1: Function/Connector Assignments

No.	Train	Carrier Board (X)	Piggyback Board (Y)	Connector (Z)	Conn. No.	Plug	Horizon Component Signal
22	A	A7	A8	X23	4	D	
23	A	A7	A8	X23	4	E	31 - LMRP Conn. Secondary Unlatch
24	A	A7	A8	X23	4	F	
25	A	A7	A9	X24	5	A	
26	A	A7	A9	X24	5	B	
27	A	A7	A9	X24	5	C	
28	A	A7	A9	X24	5	D	
29	A	A7	A9	X24	5	E	
30	A	A7	A9	X24	5	F	
31	A	A7	A9	X25	6	A	
32	A	A7	A9	X25	6	B	
33	A	A10	A11	X25	6	C	
34	A	A10	A11	X25	6	D	
35	A	A10	A11	X25	6	E	
36	A	A10	A11	X25	6	F	
37	A	A10	A11	X27	7	A	
38	A	A10	A11	X27	7	B	
39	A	A10	A11	X27	7	C	
40	A	A10	A11	X27	7	D	
41	A	A10	A12	X27	7	E	
42	A	A10	A12	X27	7	F	

Confidential Treatment Requested by Transocean Holdings LLC TRN-HCEC-00056411

Table 3-1: Function/Connector Assignments

No.	Train	Carrier Board (X)	Piggyback Board (Y)	Connector (Z)	Conn No	Plug	Horizon Component Signal
43	A	A10	A12	X28	8	A	
44	A	A10	A12	X28	8	B	
45	A	A10	A12	X28	8	C	
46	A	A10	A12	X28	8	D	
47	A	A10	A12	X28	8	E	103 - HP Shear Close
48	A	A10	A12	X28	8	F	
49	A	A13	A14	X30	9	A	95 - LOC Open
50	A	A13	A14	X30	9	B	96 - LOC Close
51	A	A13	A14	X30	9	C	97 - LIC Open
52	A	A13	A14	X30	9	D	98 - LIC Close
53	A	A13	A14	X30	9	E	99 - HP Casing Shear Close
54	A	A13	A14	X30	9	F	
55	A	A13	A14	X31	10	A	91 - UOC Open
56	A	A13	A14	X31	10	B	92 - UOC Close
57	A	A13	A15	X31	10	C	
58	A	A13	A15	X31	10	D	76 - Upper Pipe Ram Close
59	A	A13	A15	X31	10	E	
60	A	A13	A15	X31	10	F	78 - Middle Pipe Ram Close
61	A	A13	A15	X32	11	A	
62	A	A13	A15	X32	11	B	
63	A	A13	A15	X32	11	C	
64	A	A13	A15	X32	11	D	

Confidential Treatment Requested by Transocean Holdings LLC TRN-HCEC-00056412

Table 3-1: Function/Connector Assignments							
No.	Train	Carrier Board (X)	Piggyback Board (Y)	Connector (Z)	Conn. No.	Plug	Horizon Component Signal
65	A	A16	A17	X32	11	E	
66	A	A16	A17	X32	11	F	66 - Shearing Blind Ram #1 Close
67	A	A16	A17	X34	12	A	
68	A	A16	A17	X34	12	B	68 - Lower Pipe Ram #5 Close
69	A	A16	A17	X34	12	C	
70	A	A16	A17	X34	12	D	
71	A	A16	A17	X34	12	E	
72	A	A16	A17	X34	12	F	72 - Casing Shear Ram #2 Close
73	A	A16	A18	X35	13	A	
74	A	A16	A18	X35	13	B	
75	A	A16	A18	X35	13	C	
76	A	A16	A18	X35	13	D	82 - Stack Accumulator Charge
77	A	A16	A18	X35	13	E	83 - UOK Open
78	A	A16	A18	X35	13	F	84 - UOK Close
79	A	A16	A18	X36	14	A	17 - LMRP Connector Unlatch
80	A	A16	A18	X36	14	B	
81	A	A19	A20	X36	14	C	
82	A	A19	A20	X36	14	D	
83	A	A19	A20	X36	14	E	23 - LMRP Accumulator Charge
84	A	A19	A20	X36	14	F	
85	A	A19	A20	X38	15	A	

Confidential Treatment Requested by Transocean Holdings LLC TRN-HCEC-00056413

Table 3-1: Function/Connector Assignments							
No.	Train	Carrier Board (X)	Piggyback Board (Y)	Connector (Z)	Conn. No.	Plug	Horizon Component Signal
86	A	A19	A20	X38	15	B	
87	A	A19	A20	X38	15	C	
88	A	A19	A20	X38	15	D	
89	A	A19	A21	X38	15	E	29 - Yellow Pod Hot Line Supply Open
90	A	A19	A21	X38	15	F	
91	A	A19	A21	X39	16	A	89 - LIK Open
92	A	A19	A21	X39	16	B	90 - LIK Close
93	A	A19	A21	X39	16	C	42 - Yellow Pod Conduit Supply Open
94	A	A19	A21	X39	16	D	43 - Blue Pod Conduit Supply Open
95	A	A19	A21	X39	16	E	93 - UIC Open
96	A	A19	A21	X39	16	F	94 - UIC Close
97	A	A22	A23	X41	17	A	
98	A	A22	A23	X41	17	B	
99	A	A22	A23	X41	17	C	
100	A	A22	A23	X41	17	D	
101	A	A22	A23	X41	17	E	
102	A	A22	A23	X41	17	F	
103	A	A22	A23	X42	18	A	
104	A	A22	A23	X42	18	B	
105	A	A22	A24	X42	18	C	

Confidential Treatment Requested by Transocean Holdings LLC TRN-HCEC-00056414

Table 3-1: Function/Connector Assignments

No.	Train	Carrier Board (X)	Piggyback Board (Y)	Connector (Z)	Conn. No.	Plug	Horizon Component Signal
106	A	A22	A24	X42	18	D	
107	A	A22	A24	X42	18	E	
108	A	A22	A24	X42	18	F	
109	B	A35	A36	X19	1	A	85 - UIK Open
110	B	A35	A36	X19	1	B	86 - UIK Close
111	B	A35	A36	X19	1	C	87 - LOK Open
112	B	A35	A36	X19	1	D	88 - LOK Close
113	B	A35	A36	X19	1	E	
114	B	A35	A36	X19	1	F	
115	B	A35	A36	X20	2	A	
116	B	A35	A36	X20	2	B	
117	B	A35	A37	X20	2	C	
118	B	A35	A37	X20	2	D	
119	B	A35	A37	X20	2	E	
120	B	A35	A37	X20	2	F	
121	B	A35	A37	X21	3	A	
122	B	A35	A37	X21	3	B	12 - UA Preventer Close
123	B	A35	A37	X21	3	C	
124	B	A35	A37	X21	3	D	14 - LA Preventer Close
125	B	A38	A39	X21	3	E	15 - Blue Pod Hot Line Supply Open
126	B	A38	A39	X21	3	F	

Confidential Treatment Requested by Transocean Holdings LLC TRN-HCEC-00056415

Table 3-1: Function/Connector Assignments							
No.	Train	Carrier Board (X)	Piggyback Board (Y)	Connector (Z)	Conn. No.	Plug	Horizon Component Signal
127	B	A38	A39	X23	4	A	49 - Pod Select Pilot Open
128	B	A38	A39	X23	4	B	
129	B	A38	A39	X23	4	C	
130	B	A38	A39	X23	4	D	
131	B	A38	A39	X23	4	E	31 - LMRP Conn. Secondary Unlatch
132	B	A38	A39	X23	4	F	
133	B	A38	A40	X24	5	A	
134	B	A38	A40	X24	5	B	
135	B	A38	A40	X24	5	C	
136	B	A38	A40	X24	5	D	
137	B	A38	A40	X24	5	E	
138	B	A38	A40	X24	5	F	
139	B	A38	A40	X25	6	A	
140	B	A38	A40	X25	6	B	
141	B	A41	A42	X25	6	C	
142	B	A41	A42	X25	6	D	
143	B	A41	A42	X25	6	E	
144	B	A41	A42	X25	6	F	
145	B	A41	A42	X27	7	A	
146	B	A41	A42	X27	7	B	
147	B	A41	A42	X27	7	C	

Confidential Treatment Requested by Transocean Holdings LLC TRN-HCEC-00056416

Table 3-1: Function/Connector Assignments							
No.	Train	Carrier Board (X)	Piggyback Board (Y)	Connector (Z)	Conn. No.	Plug	Horizon Component Signal
148	B	A41	A42	X27	7	D	
149	B	A41	A43	X27	7	E	
150	B	A41	A43	X27	7	F	
151	B	A41	A43	X28	8	A	
152	B	A41	A43	X28	8	B	
153	B	A41	A43	X28	8	C	
154	B	A41	A43	X28	8	D	
155	B	A41	A43	X28	8	E	103 - HP Shear Close
156	B	A41	A43	X28	8	F	
157	B	A44	A45	X30	9	A	95 - LOC Open
158	B	A44	A45	X30	9	B	96 - LOC Close
159	B	A44	A45	X30	9	C	97 - LIC Open
160	B	A44	A45	X30	9	D	98 - LIC Close
161	B	A44	A45	X30	9	E	99 - HP Casing Shear Close
162	B	A44	A45	X30	9	F	
163	B	A44	A45	X31	10	A	91 - UOC Open
164	B	A44	A45	X31	10	B	92 - UOC Close
165	B	A44	A46	X31	10	C	
166	B	A44	A46	X31	10	D	76 - Upper Pipe Ram Close
167	B	A44	A46	X31	10	E	
168	B	A44	A46	X31	10	F	78 - Middle Pipe Ram Close
169	B	A44	A46	X32	11	A	

Confidential Treatment Requested by Transocean Holdings LLC TRN-HCEC-00056417

Table 3-1: Function/Connector Assignments							
No.	Train	Carrier Board (X)	Piggyback Board (Y)	Connector (Z)	Conn No.	Plug	Horizon Component Signal
170	B	A44	A46	X32	11	B	
171	B	A44	A46	X32	11	C	
172	B	A44	A46	X32	11	D	
173	B	A47	A48	X32	11	E	
174	B	A47	A48	X32	11	F	66 - Shearing Blind Ram #1 Close
175	B	A47	A48	X34	12	A	
176	B	A47	A48	X34	12	B	68 - Lower Pipe Ram #5 Close
177	B	A47	A48	X34	12	C	
178	B	A47	A48	X34	12	D	
179	B	A47	A48	X34	12	E	
180	B	A47	A48	X34	12	F	72 - Casing Shear Ram #2 Close
181	B	A47	A49	X35	13	A	
182	B	A47	A49	X35	13	B	
183	B	A47	A49	X35	13	C	
184	B	A47	A49	X35	13	D	82 - Stack Accumulator Charge
185	B	A47	A49	X35	13	E	83 - UOK Open
186	B	A47	A49	X35	13	F	84 - UOK Close
187	B	A47	A49	X36	14	A	17 - LMRP Connector Unlatch
188	B	A47	A49	X36	14	B	
189	B	A50	A51	X36	14	C	
190	B	A50	A51	X36	14	D	

Confidential Treatment Requested by Transocean Holdings LLC TRN-HCEC-00056418

Table 3-1: Function/Connector Assignments							
No.	Train	Carrier Board (X)	Piggyback Board (Y)	Connector (Z)	Conn No.	Plug	Horizon Component Signal
191	B	A50	A51	X36	14	E	23 - LMRP Accumulator Charge
192	B	A50	A51	X36	14	F	
193	B	A50	A51	X38	15	A	
194	B	A50	A51	X38	15	B	
195	B	A50	A51	X38	15	C	
196	B	A50	A51	X38	15	D	
197	B	A50	A52	X38	15	E	29 - Yellow Pod Hot Line Supply Open
198	B	A50	A52	X38	15	F	
199	B	A50	A52	X39	16	A	89 - LIK Open
200	B	A50	A52	X39	16	B	90 - LIK Close
201	B	A50	A52	X39	16	C	42 - Yellow Pod Conduit Supply Open
202	B	A50	A52	X39	16	D	43 - Blue Pod Conduit Supply Open
203	B	A50	A52	X39	16	E	93 - UIC Open
204	B	A50	A52	X39	16	F	94 - UIC Close
205	B	A53	A54	X41	17	A	
206	B	A53	A54	X41	17	B	
207	B	A53	A54	X41	17	C	
208	B	A53	A54	X41	17	D	
209	B	A53	A54	X41	17	E	
210	B	A53	A54	X41	17	F	

Confidential Treatment Requested by Transocean Holdings LLC TRN-HCEC-00056419

Table 3-1: Function/Connector Assignments

No.	Train	Carrier Board (X)	Piggyback Board (Y)	Connector (Z)	Conn. No.	Plug	Horizon Component Signal
211	B	A53	A54	X42	18	A	
212	B	A53	A54	X42	18	B	
213	B	A53	A55	X42	18	C	
214	B	A53	A55	X42	18	D	
215	B	A53	A55	X42	18	E	
216	B	A53	A55	X42	18	F	

Confidential Treatment Requested by Transocean Holdings LLC TRN-HCEC-00056420

Figure 3-1: General Channel - Toolpusher's Panel (TPP) to Comm./Power Dist. Panel A
From Pushbutton Switch to Transmit Command Signal to CDC

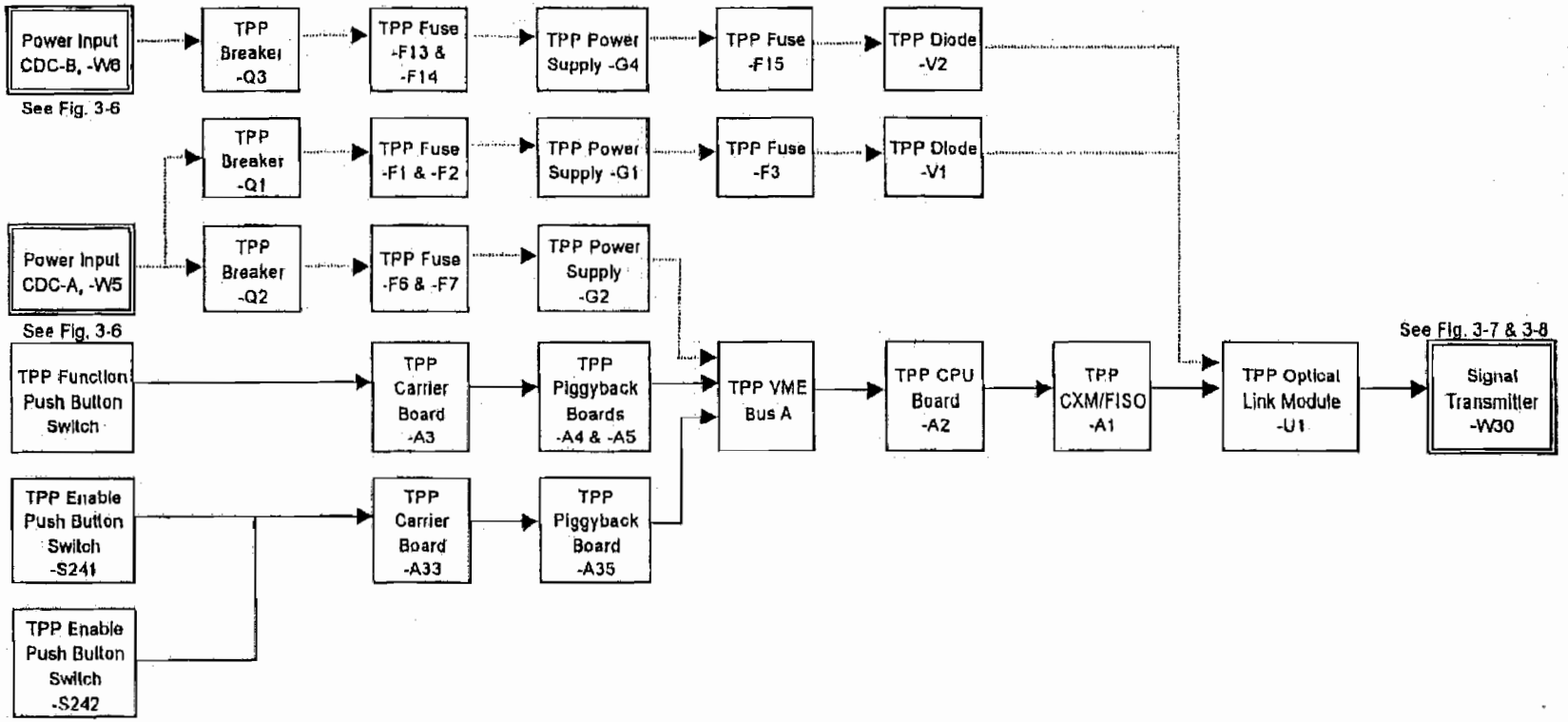

Note: See Figure 3-11 for symbol Key

Confidential Treatment Requested by Transocean Holdings LLC

TRN-HCEC-00056421

Figure 3-2: General Channel - Toolpusher's Panel (TPP) to Comm./Power Dist. Panel B
From Pushbutton Switch to Transmit Command Signal to CDC

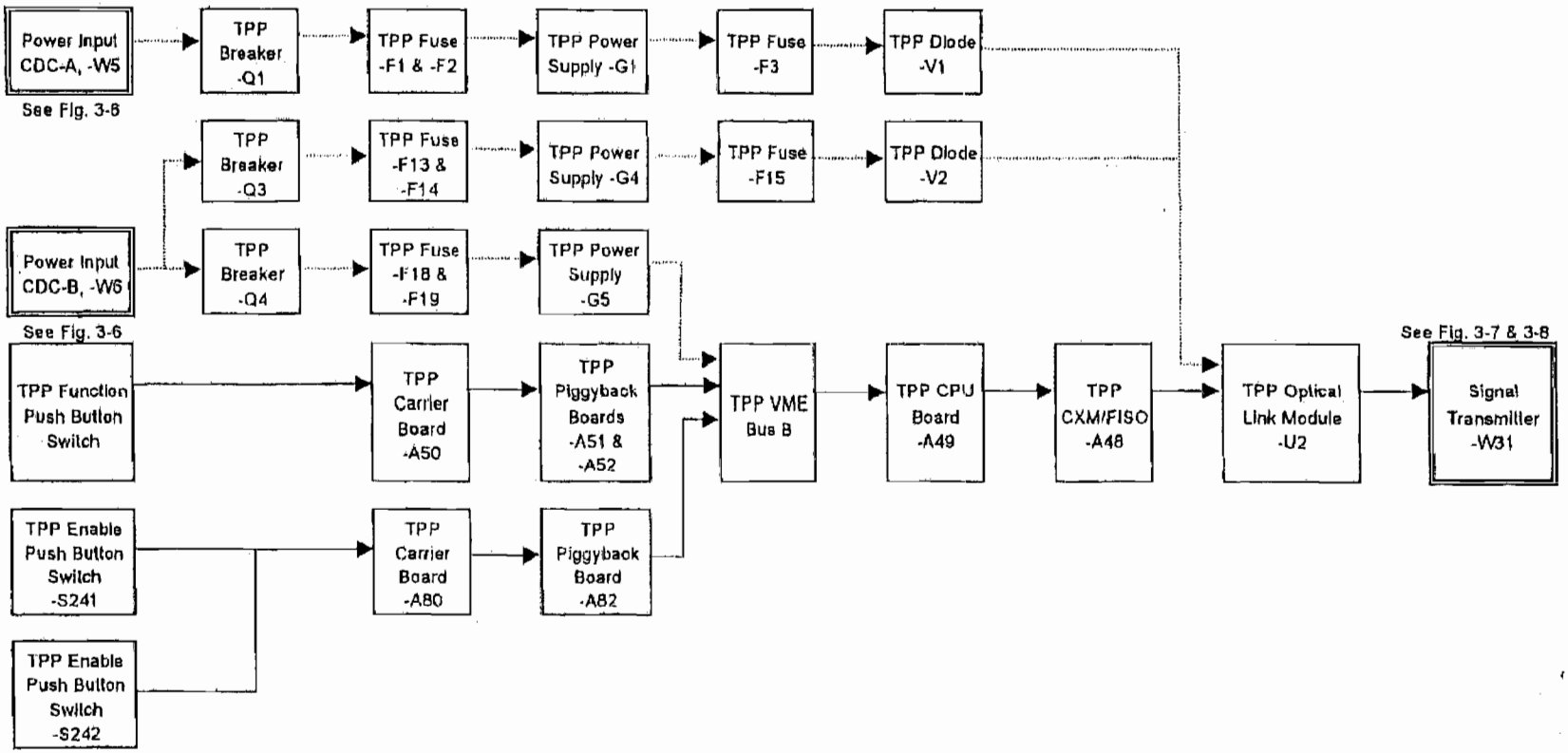

Note: See Figure 3-11 for symbol Key

Confidential Treatment Requested by Transocean Holdings LLC
TRN-HCEC-00056422

Confidential Treatment Requested by Transocean Holdings LLC

TRN-HCEC-00056423

Figure 3-3: General Channel - Driller's Panel (DP) to Comm./Power Dist. Panel A
From Pushbutton Switch to Transmit Command Signal to CDC

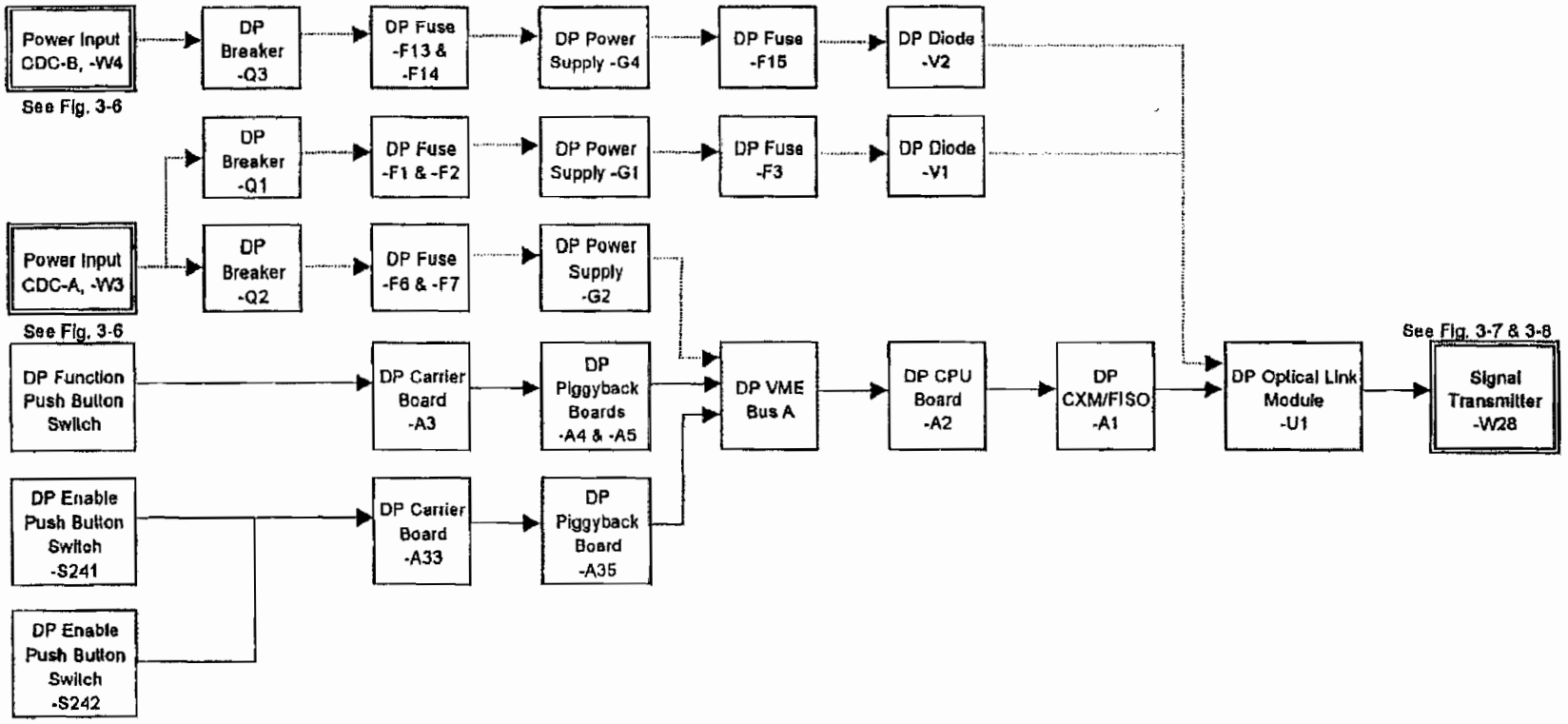

Note: See Figure 3-11 for symbol Key

Figure 3-4: General Channel - Driller's Panel (DP) to Comm./Power Dist. Panel B
From Pushbutton Switch to Transmit Command Signal to CDC

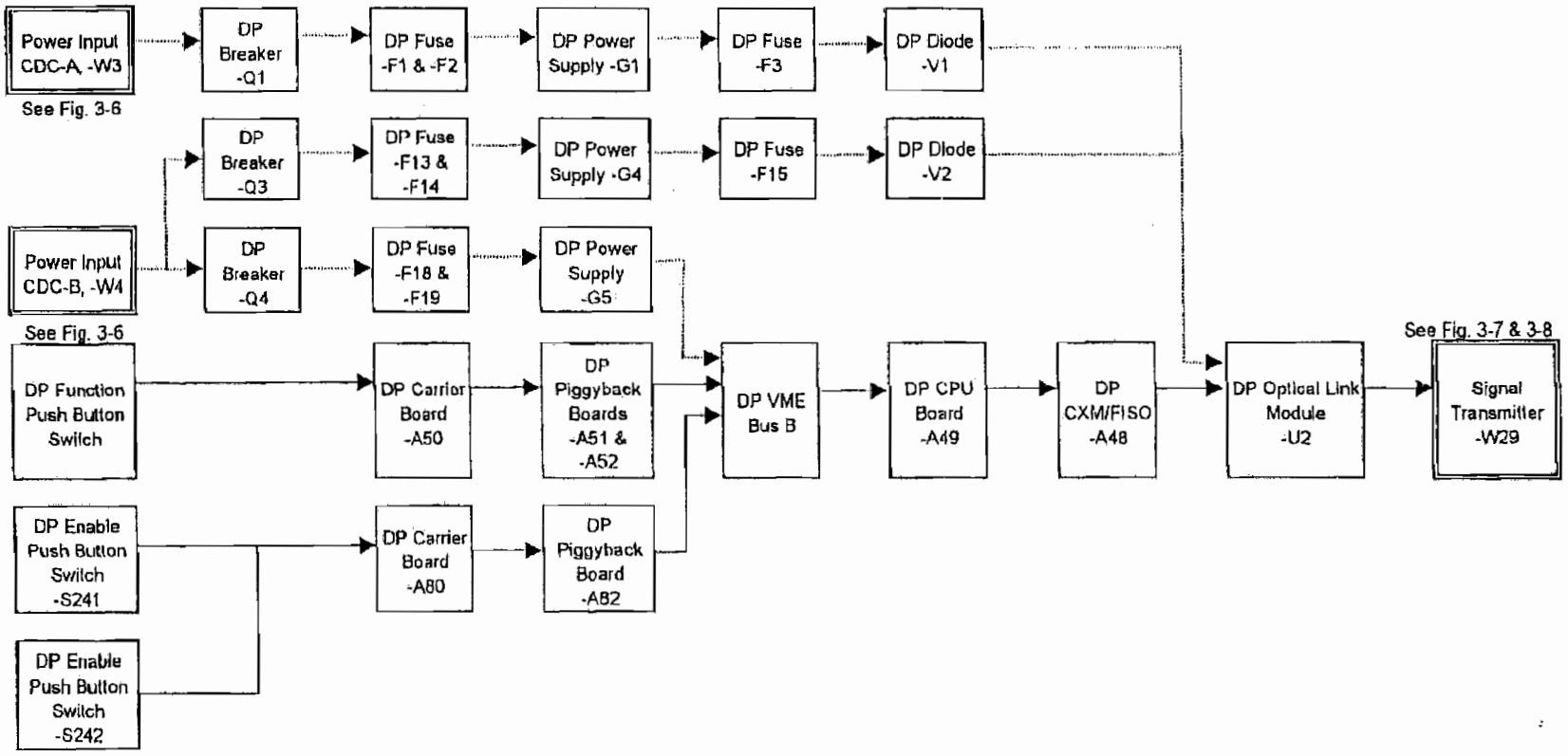

Note: See Figure 3-11 for symbol Key

Confidential Treatment Requested by Transocean Holdings LLC
TRN-HCEC-00056424

Figure 3-5: General Channel - CCU Workstation to Comm./Power Dist. Panel A & B
From CCU to Transmit Command Signal to CDC

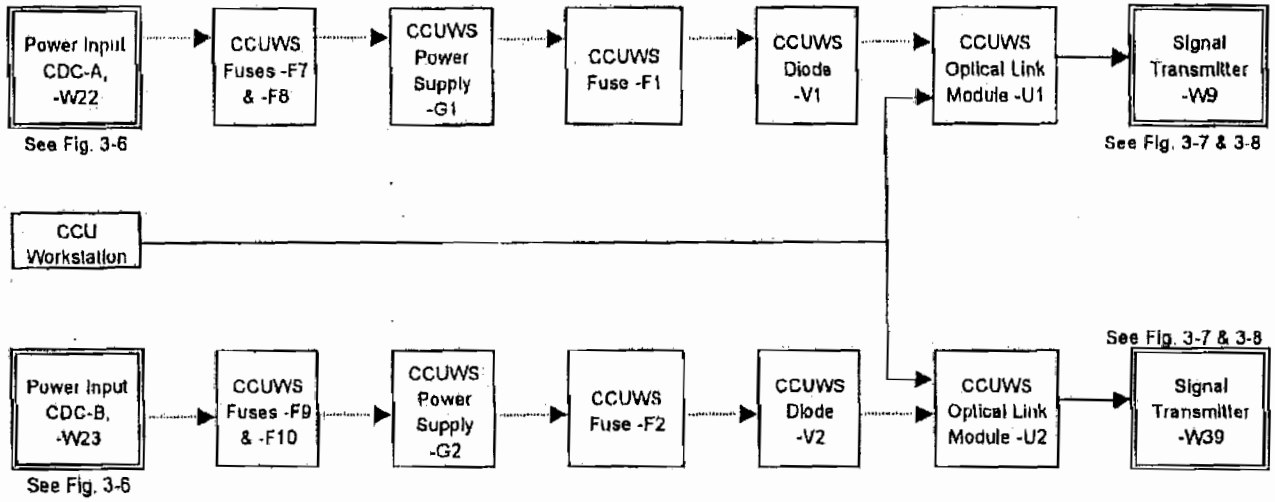

Note: See Figure 3-11 for symbol Key

Confidential Treatment Requested by Transocean Holdings LLC

TRN-HCEC-00056425

Figure 3-6: Power - Communications/Power Distribution Panel
Panel A (W5) and B (W6) to Toolpusher's Panel
Panel A (W3) and B (W4) to Driller's Panel
Panel A (W22) and B (W23) to CCU Workstation

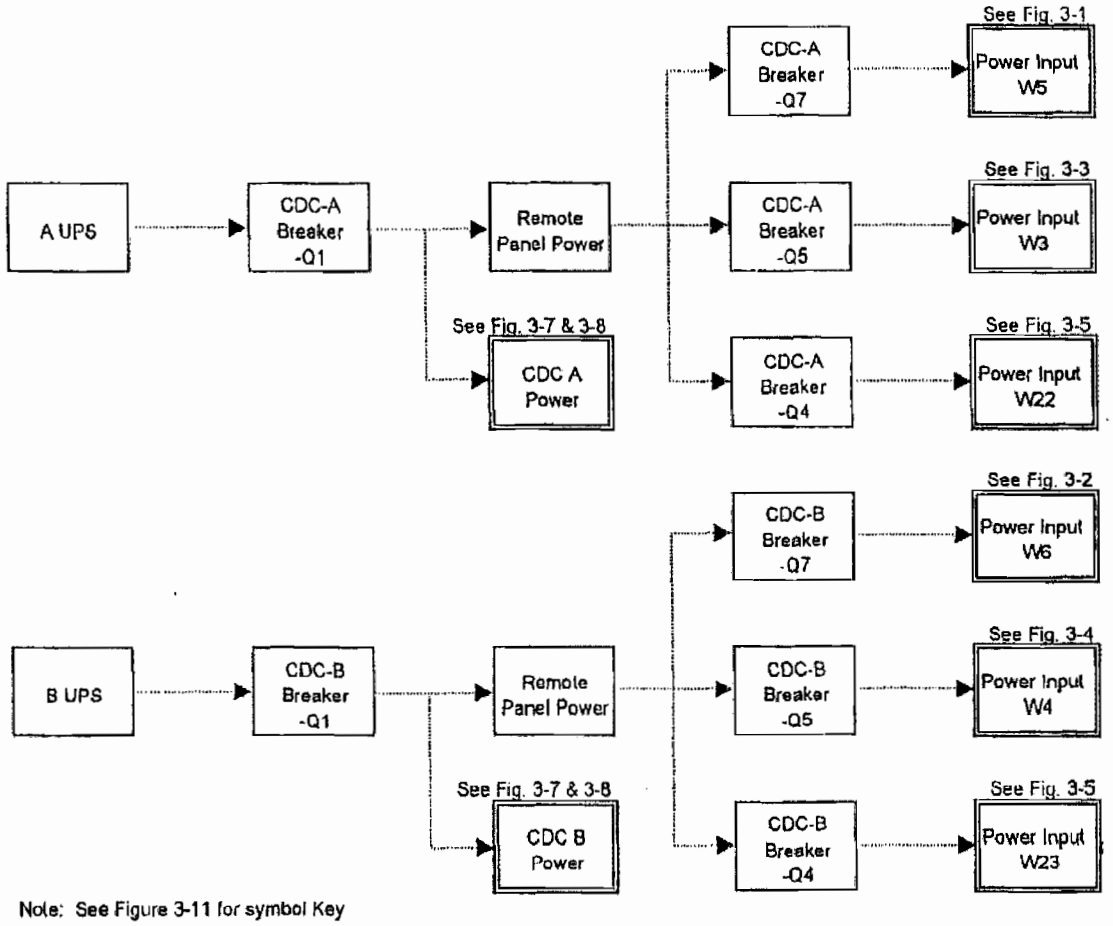

Note: See Figure 3-11 for symbol Key

Confidential Treatment Requested by Transocean Holdings LLC
TRN-HCEC-00056426

Figure 3-7: Blue Power/Signal Comm./Power Dist. Panel A&B to -W60, -W62

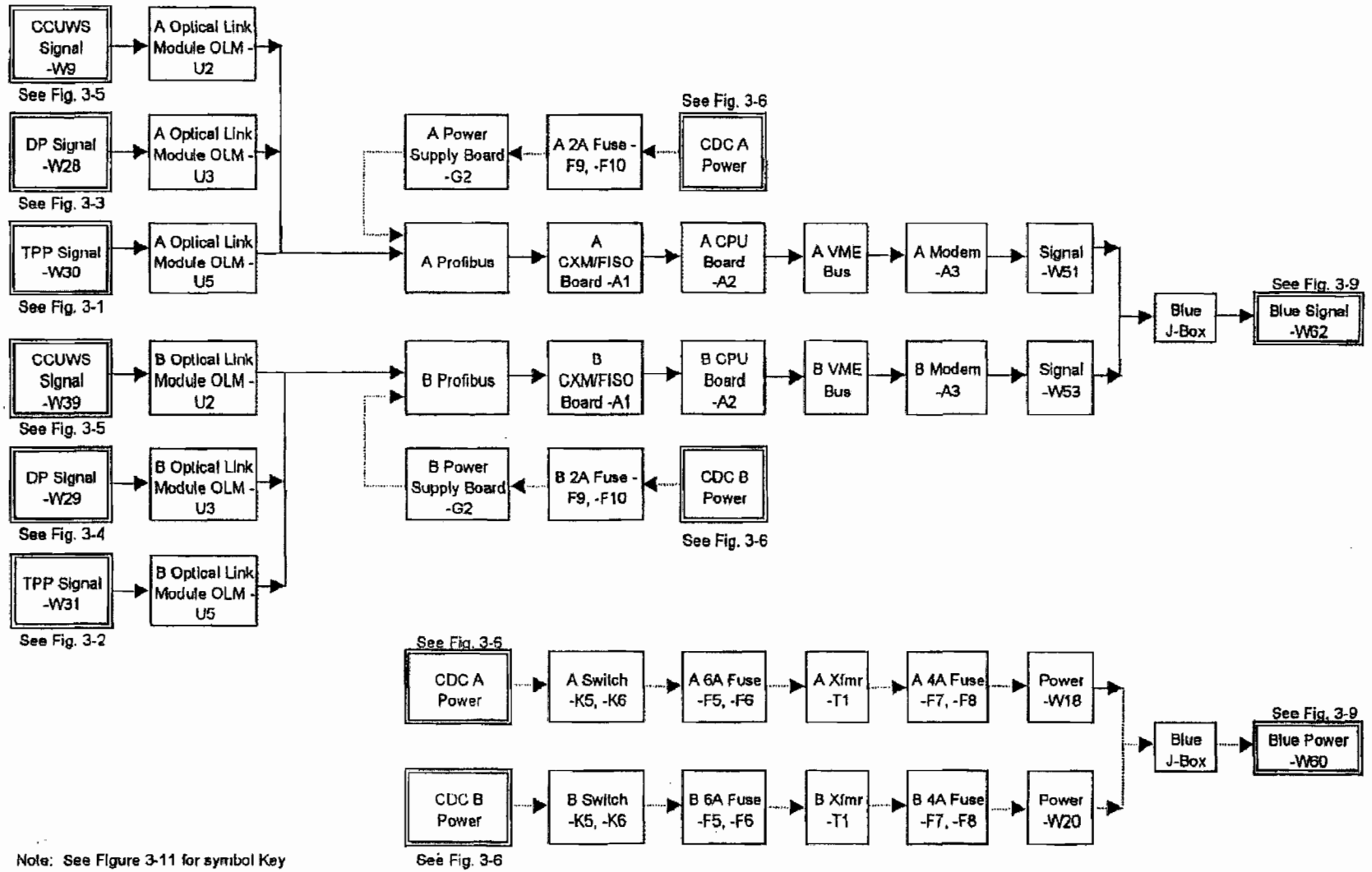

Note: See Figure 3-11 for symbol Key

Confidential Treatment Requested by Transocean Holdings LLC

TRN-HCEC-00056427

Figure 3-8: Yellow Power/Signal Comm./Power Dist. Panel A&B to -W61, -W63

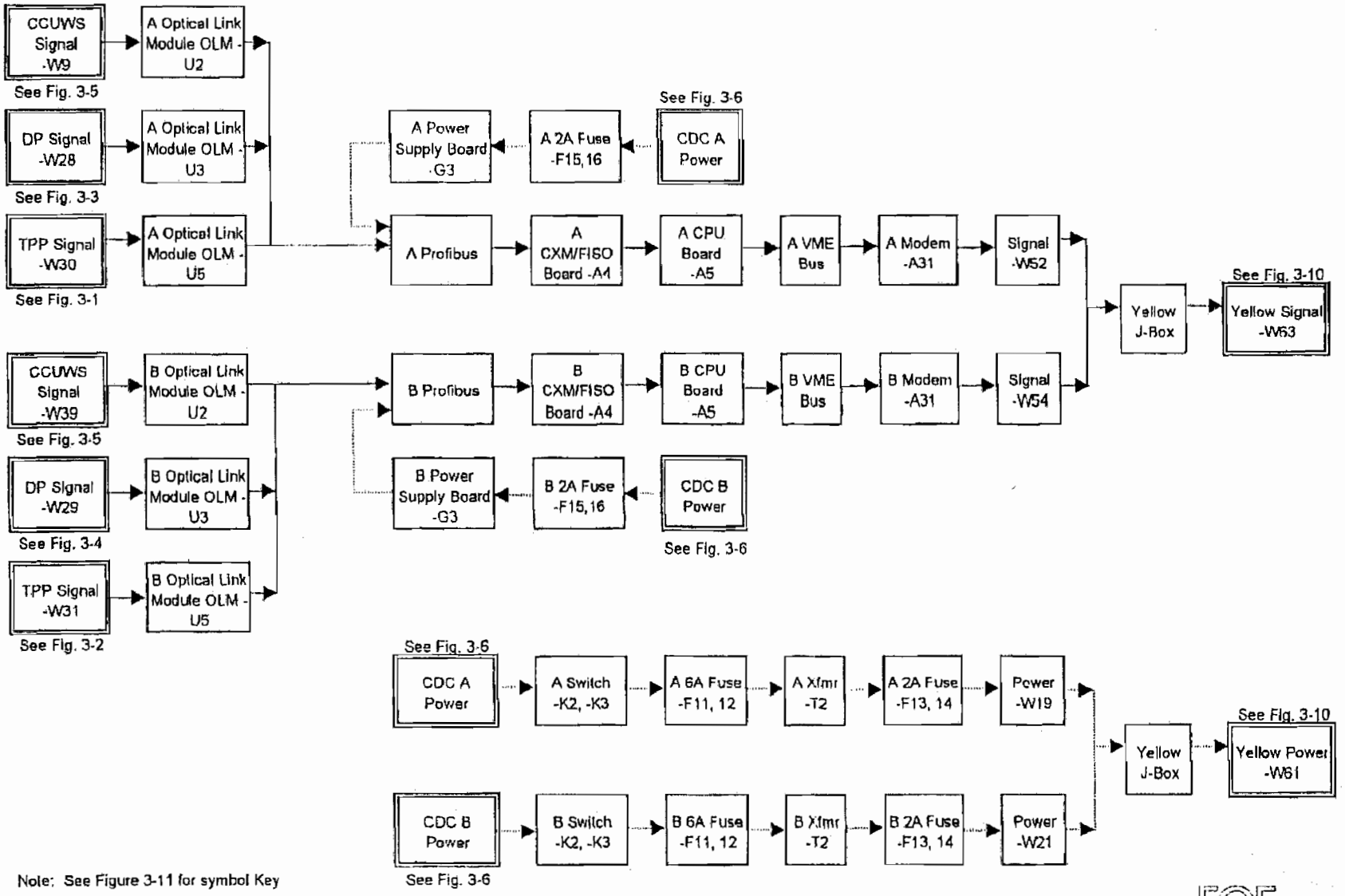

Note: See Figure 3-11 for symbol Key

Confidential Treatment Requested by Transocean Holdings LLC

TRN-HCEC-00056428

Figure 3-9: Blue Signal -W62 Thru SEM to Solenoid

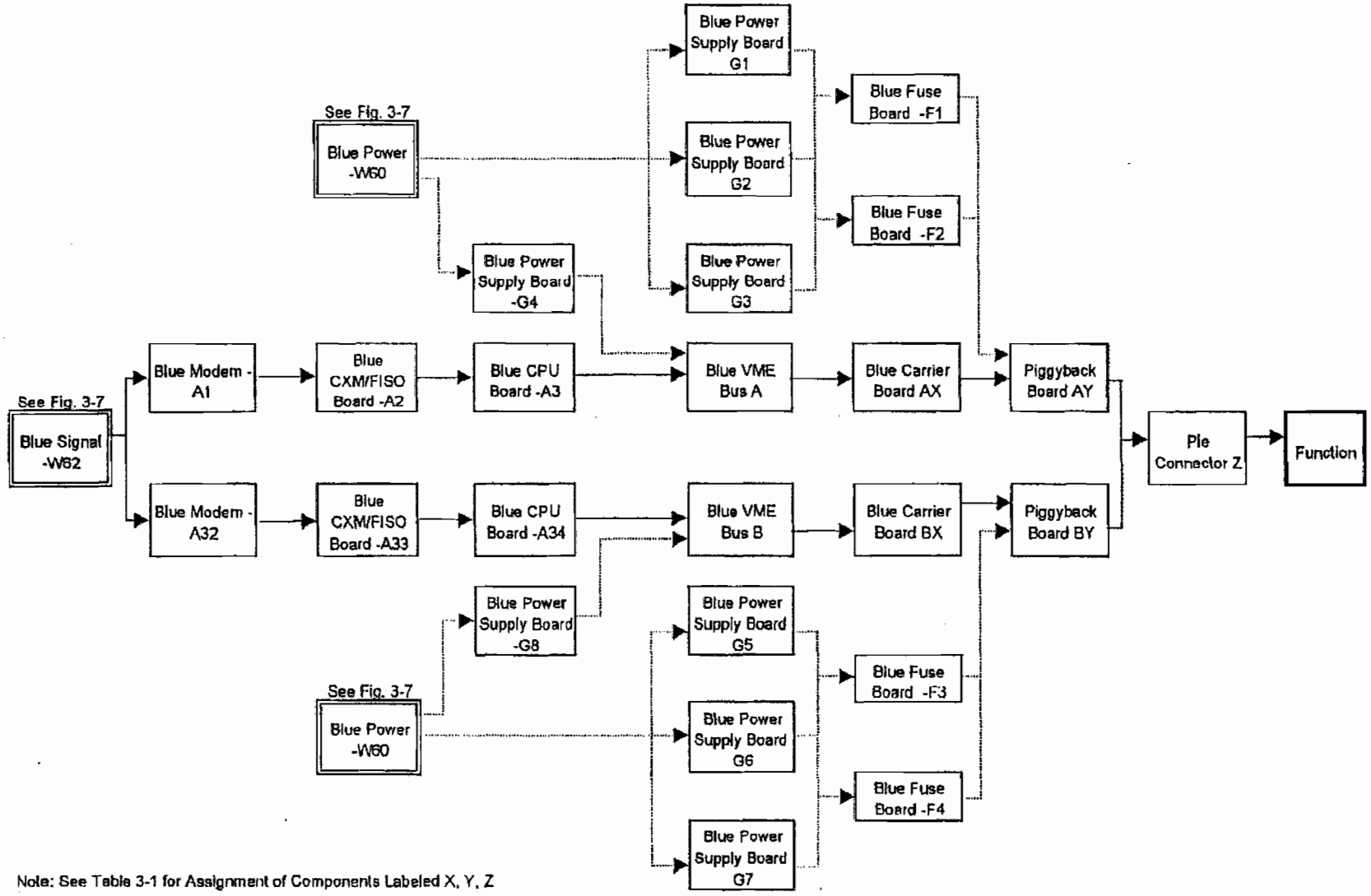

Note: See Table 3-1 for Assignment of Components Labeled X, Y, Z
See Figure 3-11 for symbol key

Confidential Treatment Requested by Transocean Holdings LLC TRN-HCEC-00056429

Figure 3-10: Yellow Signal -W63 Thru SEM to Solenoid

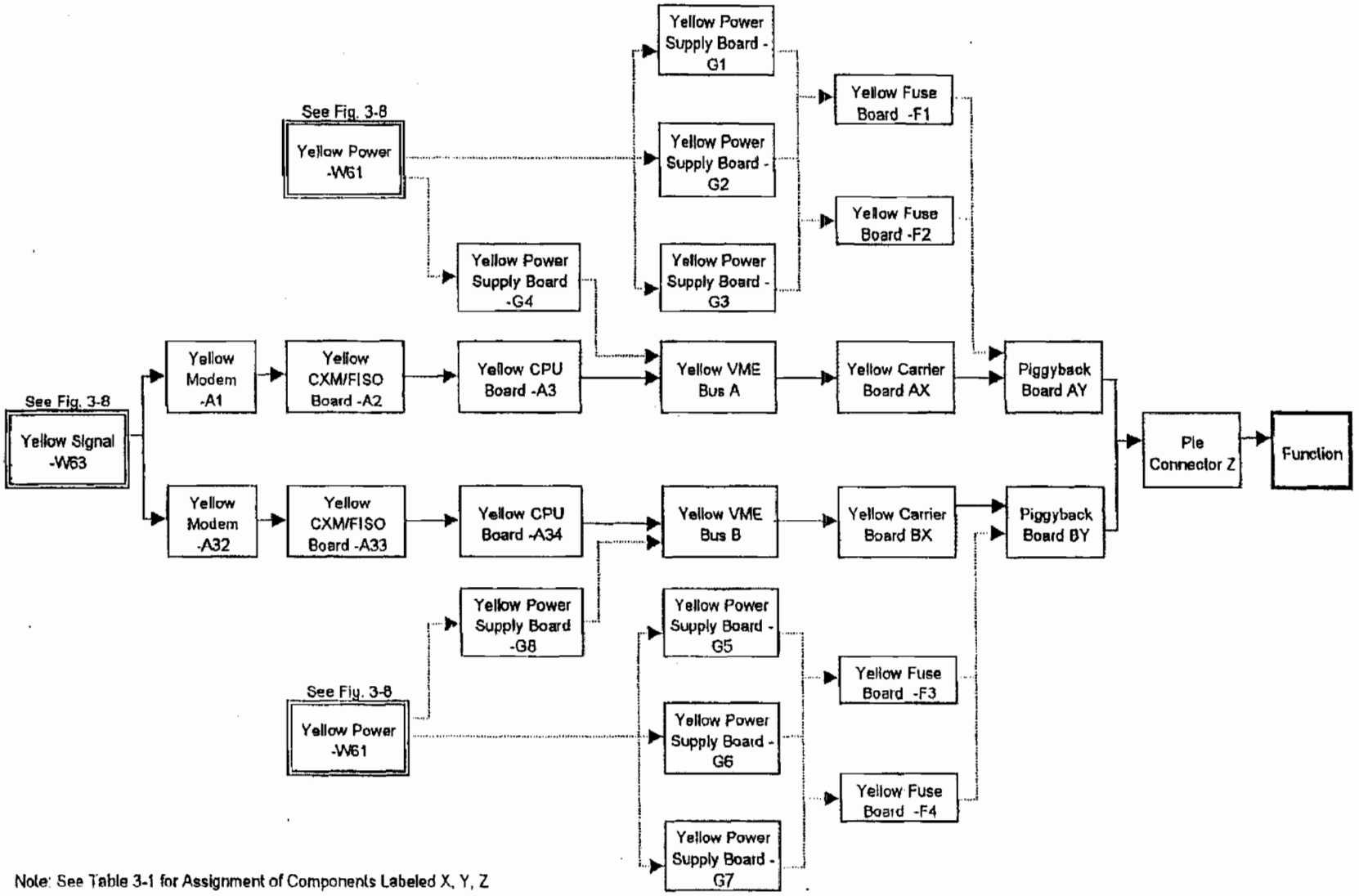

Note: See Table 3-1 for Assignment of Components Labeled X, Y, Z
See Figure 3-11 for symbol key

Confidential Treatment Requested by Transocean Holdings LLC
TRN-HCEC-00056430

Confidential Treatment Requested by Transocean Holdings LLC

TRN-HCEC-00056431

Figure 3-11: Flow Diagram Symbol Key

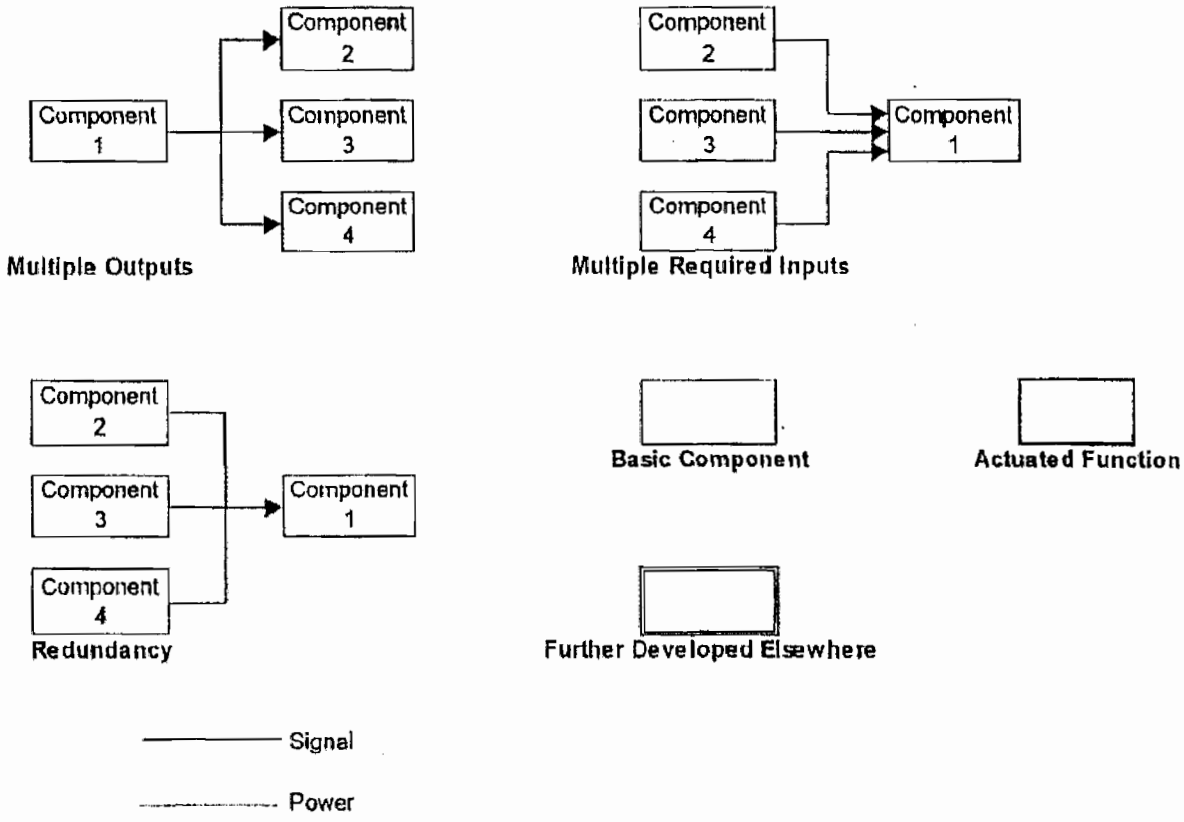

4. EVALUATION RESULTS

As discussed in the introduction, the evaluation of the fault trees by boolean reduction results in the identification of the minimal cutsets, or the minimum combinations of failures that will result in the occurrence of the undesired event. Each of these cutsets is composed of one or more failures and each of the failures is assigned a probability of failure as discussed in Section 3. The product of the failure probabilities for all failure events in a cutset represents the probability of occurrence of the cutset. The sum of the cutsets for each fault tree model represents the probability of occurrence of the associated undesired event. In addition to these quantitative results, potential problem areas are often identified during the development of the model. These are discussed in Section 5. Table 4-1 summarizes the probability of occurrence of each of the undesired events. The number of cutsets shown in the table are those with a probability of occurrence greater than 1E-10. The overall potential for any of the events occurring which lead to the failure to perform the EDS function is 3.12E-4 (1183 cutsets), which is less than the sum of the individual events in Table 4-1. This is due to the fact that some of the cutset combinations result in failure of more than one of the functions but are correctly only counted once when looking at the overall likelihood. The listing of the first 100 cutsets (or all if less than 100 cutsets exist above 1E-10) for each of the functions is shown in Appendix C. The relative dominance of the blue pod components should not be interpreted that the blue pod is more unreliable. The model was developed for the condition with the blue pod in operation as representative. This same apparent dominance also appears in the importance measures presented in Appendix D but in fact there is no difference between the blue and yellow pods. The failure probability for the well control scenario is approximately an order of magnitude lower than for the emergency disconnect scenario.

The major contributor to the failure likelihood associated with the BOP control system results from the selected stack configuration. With only one shear ram capable of sealing the well in, it is extremely difficult to remove all the single failure points from the control system. The final shuttle valve, which supplies the hydraulics to the blind shear ram, represents such a single failure point for the disconnect function.

Confidential Treatment Requested by Transocean Holdings LLC TRN-HCEC-00056432

Table 4-1: PROBABILITY OF OCCURRENCE OF EACH OF THE UNDESIRED EVENTS		
Undesired Event	Probability of Occurrence (per demand)	Number of Cutsets
Failure to perform EDS functions	3.12E-4	1183
Failure of the shear rams	2.06E-4	524
Failure to disconnect the riser from the stack	3.61E-5	753
Failure to close the upper and lower choke lines	3.32E-5	66
Failure to close the upper and lower kill lines	3.32E-7	66
Failure of well control operations	3.70E-5	612
Failure of well control using shear or pipe rams, including choke and kill	2.19E-5	525
Failure to close upper and lower annular	1.66E-5	313

The dominant failure combinations (in terms of probability of occurrence) associated with the failure of the BOP to perform the Emergency Disconnect Sequence when required are:

- Failure of the final shuttle valve providing hydraulic supply to the blind shear ram close port,
- Failure of a pair of choke or kill valves to close on demand,
- Failure of the indication to identify need to initiate EDS or operator failure to initiate EDS,
- Failure of the final shuttle valve providing hydraulic supply to the casing shear ram close port and the presence of casing in the stack,

Confidential Treatment Requested by Transocean Holdings LLC TRN-HCEC-00056433

- Common cause failure of all four pod modems or all four communication/power distribution panel modems

As noted above, due to the selected stack configuration, the final shuttle valve which supplies the blind shear ram represents a single failure point and accounts for 56% of the failure likelihood of the system to perform an EDS.

The failure of the four choke or kill valve pairs each contribute about 5% of the failure likelihood of the system for disconnect. This is a more significant contribution than has been found in past analyses due to their less frequent testing schedule (i.e., once a week operation of the valves rather than the daily operation of the valves for other systems.

The dominant failure combinations associated with well control operations show that the additional diversity and redundancy available for well control provide additional reliability. The likelihood of failure for the critical functions for well control is almost an order of magnitude below that for disconnect. The dominant faults are a little wider distributed than in the disconnect case but still represent a small subset of the number of failure scenarios.

- Failure of the indication to identify need to initiate well control actions or operator failure to initiate well control actions,
- Common cause failure of all four pod modems or all four communication and distribution cabinet modems,
- Inadequate precharge on the pod manifold regulator pilot and failure to switch to the inactive pod,
- Software error in the pod software or communication and distribution cabinet software, which are undetected.

Another result of the fault tree evaluation is the development of importance factors. The factors allow the analyst to focus in on the areas of risk which are important to system reliability. Two measures are typically calculated, the risk reduction measure and the risk increase measure.

For the evaluation of the BOP in terms of emergency disconnect, the most important factor to both risk increase and risk reduction is the final shuttle valve

Confidential Treatment Requested by Transocean Holdings LLC TRN-HCEC-00056434

associated with the blind shear ram. Since this area of the system is a single failure point, the importance of the shuttle valve reliability is magnified. Care should be taken to ensure the highest reliability possible from this valve. The maximum improvement in reliability possible by improvement of the shuttle valve is about a little more than a factor of 2. Conversely, if the reliability of the shuttle valve is underestimated either due to the limited data available or differences in the installed shuttle valve from the generic data sample, the reliability of the system may be severely impacted. The maximum increase in system unavailability due to an increased probability of shuttle valve failure is a factor about 3200. A specific data collection effort for the particular shuttle valve used in the Cameron system may remove some of the conservatism introduced by the use of generic data and reduce the dominance of this component. However care must be taken to ensure continued high reliability of the shuttle valve since it is extremely critical to the overall BOP disconnect operation. The final shuttle valve for the casing shear ram represents a similar potential problem, but it's importance with respect to the overall likelihood is reduced due to the smaller fraction of time that it's operability is required for a successful disconnect. Although the impact of failure of the casing shear ram is not as dominant, the same attention to its reliability should be paid as extended to the blind shear ram shuttle valve.

Beyond the blind ram shuttle valve, the next most critical factor to risk decrease for disconnect is the reliability of the choke and kill valves. The identified weekly valve exercise leads to a higher unavailability than if the valve were tested more frequently. Additional testing of the valves would lead, at most to a 5% reduction in the risk. If the valves are actually cycled more than once per week under the current operating philosophy, the contribution would in reality be lower.

Beyond these items, the largest potential item for reducing the risk (increasing the reliability) for both disconnect and well control operations is to ensure that the indication, recognition, and willingness of the operator to initiate the appropriate actions or to switch to the standby pod following failure in the active pod. The indication, recognition, and willingness of the operator to initiate the appropriate actions is also the next largest factor which can potentially increase the risk for failure to disconnect or failure of well control. Given the importance of the operator, it is essential that the indication available to him provides a clear picture

Confidential Treatment Requested by Transocean Holdings LLC TRN-HCEC-00056435

of the status and that the guidelines for initiating a disconnect or performing well control operations are clear and concise.

The only other factor which can potentially raise the risk by a large amount are the postulated common cause failures in the modems, power supplies, and CPU boards. These types of failures are difficult to reduce because they are generally driven by common maintenance errors, common environmental effects, common manufacturing defects, or other similar factors. In general practice, the method used to reduce the potential for common cause failures is to provide diversity, e.g., use of multiple brands of modems, power supplies, and CPU boards. This is not always practical nor desirable from a standardization point of view. Given the low risk reduction potential for these items, care should be taken to ensure that the equipment is qualified for its operational environment, and care is taken in any maintenance activities to reduce the potential for common errors in an attempt to minimize the potential for a higher common cause contribution.

The complete importance analysis results are contained in Appendix D.

Confidential Treatment Requested by Transocean Holdings LLC TRN-HCEC-00056436

5. OBSERVATIONS

Several observations were made during the course of the analysis which have an impact on the current and future reliability of the Cameron BOP control system. Overall, the system has been well designed with a large amount of redundancy in most areas. One item was identified during the model development which has already resulted in a design change in the system. A condition was identified in the system, as initially configured, in which the standby pod would be unable to be hydraulically activated upon loss of the other pod's hydraulics. The pilot operated check valve which controls the pod hot line supply would close upon loss of one pod's hydraulics. As a consequence, the standby pod would be unable to assume control since there would be no pilot supply to allow the pilot valve to be opened. The initial thought had been to keep both hot line supply open signals active. However, due to concerns over binding of the shuttle valve in an indeterminate position, the supply from the inactive pod was interlocked to be inactive via software controls. This would have resulted in closure of the pilot operated check valve upon loss of hydraulics and no ability to open the alternate pod supply except through use of an ROV. The shuttle valve supplying the pilot operated check valve was replaced with a different shuttle valve that was designed to operate with hydraulic pressure with either or both hydraulic inputs pressurized. Failure of the pod hydraulic supply under this case would result in the pilot operated check valve remaining open, since the pilot supply from the inactive pod would be available immediately upon loss of the active pod hydraulics.

The design of the system with two trains of redundant electronics in each pod allows for the potential to continue operating in a safe manner even in the event of a card failure or modem failure. Although some increased risk must be expected if operation continues with a failure in the pod, this increased risk must be examined with respect to the time remaining in the drilling operation. Since the risk increase due to the failure of a single train of pod electronics is extremely minor (< 1%) even if exposed for the entire duration of the drilling operation this will not likely be the governing concern. This is due to the dominance of hardware faults in the hydraulic portions of the system. If a second train of electronics fails, but in a different pod, the risk is increased as would be expected. The increase however is not extremely significant (<5%), again due to the dominance of non-electronic faults. If the

Confidential Treatment Requested by Transocean Holdings LLC TRN-HCEC-00056437

second train of electronics is within the same pod, i.e., complete loss of pod functionality, the risk is significantly increased (970% - from 3.1E-4 to 3.3E-3) if drilling operation continues under these circumstances.

Several areas were identified during the course of the analysis which tend to drive the reliability results. The most significant is the use of a single blind shear ram in the specified stack configuration. This is a condition imposed upon the control system due to the selected stack configuration. Control system design alterations to improve the configuration's reliability would not be practical. Therefore, it is more important to be cognizant of the potential vulnerability, to strive to use the most reliable robust shuttle valve available, and to be aware of its importance during the installation and any maintenance activities involving the valve.

As indicated in the discussion of dominant contributors, the weekly demonstrations of operability for the choke and kill valves influence their reliability. More frequent operability testing can reduce the failure likelihood. However, potential impacts to the normal drilling operation arising from such changes to testing frequency must be also taken into consideration.

The arrangement of the solenoid cables/connectors on the pod piggyback/carrier boards has an effect on the system reliability. Each train of subsea pod electronics contains fourteen piggyback boards and seven carrier boards. Cameron has ensured that the circuits are assigned such that redundant functions do not utilize the same carrier board or piggyback board. If an entire board were to fail, the full complement of redundant features would be maintained. Due to the overall redundancy designed into the system, this does not significantly impact the overall system reliability, however it does reflect good reliability engineering practice.

One potential conservatism included in previous analyses of the system, which has been removed for this analysis, is the inclusion of the requirement for the annular to open in order for EDS to be successful. Although desirable, opening of the annular is not considered to be essential to successful EDS.

Confidential Treatment Requested by Transocean Holdings LLC TRN-HCEC-00056438

Appendix A

Fault Trees

APPENDIX A – Fault Tree List

FT Name	Description	Page
1-EDS	Emergency Disconnect Sequence Fails	A-1
1-WELL	Failure of Well Control Operations	A-2
B-HOTLINE	No Hydraulic Supply from Blue Hot Line	A-3
B-HYD	No Blue Hydraulic Manifold Supply	A-4
B-LA-REG	Blue LA Regulator Fails to Provide 3000 psi Supply	A-5
B-PILOT	No Blue Pilot Hydraulic Supply	A-6
B-POD	No Blue Hydraulic Pod Supply	A-7
B-PSC-REG	Blue LMRP Connector Reg. Fails to Provide 3000 psi Supply	A-8
B-RIGID	No Blue Hydraulic Supply From Rigid Conduit	A-9
B-UA-REG	Blue UA Regulator Fails to Provide 3000 psi Supply	A-10
C-ANNLR-L	No Hydraulic Supply to Close Lower Annular	A-11
C-ANNLR-U	No Hydraulic Supply to Close Upper Annular	A-12
C-LIC	Failure to Close Lower Inner Choke Valve	A-13
C-LIK	Failure to Close Lower Inner Kill Valve	A-14
C-LOC	Failure to Close Lower Outer Choke Valve	A-15
C-LOK	Failure to Close Lower Outer Kill Valve	A-16
C-UIC	Failure to Close Upper Inner Choke Valve	A-17
C-UIK	Failure to Close Upper Inner Kill Valve	A-18
C-UOC	Failure to Close Upper Outer Choke Valve	A-19
C-UOK	Failure to Close Upper Outer Kill Valve	A-20
CSRAM	No Hydraulic Supply to Casing Shear Ram	A-21
HP-HYD	No HP Hydraulic Supply	A-22
HP-HYD-BSR	No BSR HP Hydraulic Supply	A-23
HP-HYD-CSR	No CSR HP Hydraulic Supply	A-24
HPSHEARC	No Hydraulic Supply From HP (116) Supply	A-25
HPSHEARU	No Hydraulic Supply From HP (114) Supply	A-26
HYD-INNER	No Alternate Hyd. Supp. to Inner Valves	A-27
HYD-OUTER	No Alternate Hyd. Supp. to Outer Valves	A-28
LPR	Failure of Lower Pipe Ram	A-29
MPR	Failure of Middle Pipe Ram Failure of Middle Pipe Ram	A-30
O-LIC	No Hydraulic Supply to Open LIC	A-31
O-LIK	No Hydraulic Supply to Open LIK	A-32
O-LOC	No Hydraulic Supply to Open LOC	A-33
O-LOK	No Hydraulic Supply to Open LOK	A-34
O-UIC	No Hydraulic Supply to Open UIC	A-35
O-UIK	No Hydraulic Supply to Open UIK	A-36
O-UOC	No Hydraulic Supply to Open UOC	A-37
O-UOK	No Hydraulic Supply to Open UOK	A-38
P-DISC	No Hydraulic Supply to LMRP Primary Disconnect	A-39
RIGID	No Hydraulic Supply From Rigid Conduit	A-40
S-DISC	No Hydraulic Supply to LMRP Secondary Disconnect	A-41
SHEAR	Shear Function Fails	A-42
SIG-B-BCS	No Blue Signal to Open Blue Conduit Supply	A-43
SIG-B-BHLS	No Blue Signal to Open Blue Hot Line Supply	A-44

Confidential Treatment Requested by Transocean Holdings LLC TRN-HCEC-00056440

Fault Tree List (continued)

FT Name	Description	Page
SIG-B-CHP	No Blue Signal to HP Close CSR	A-45
SIG-B-CLIC	No Blue Signal to Close LIC	A-46
SIG-B-CLIK	No Blue Signal to Close LIK	A-47
SIG-B-CLOC	No Blue Signal to Close LOC	A-48
SIG-B-CLOK	No Blue Signal to Close LOK	A-49
SIG-B-COM	Common Blue Pod Signal Failures	A-50
SIG-B-CSR	No Signal to Op. Blue Casing Shear Ram Pilot Valve	A-51
SIG-B-CUIC	No Blue Signal to Close UIC	A-52
SIG-B-CUIK	No Blue Signal to Close UIK	A-53
SIG-B-CUOC	No Blue Signal to Close UOC	A-54
SIG-B-CUOK	No Blue Signal to Close UOK	A-55
SIG-B-LAC	No Blue Signal to Close Lower Annular	A-56
SIG-B-LPR	No Blue Signal to Close LPR	A-57
SIG-B-MPR	No Blue Signal to Close MPR	A-58
SIG-B-OLIC	No Blue Signal to Open LIC	A-59
SIG-B-OLIK	No Blue Signal to Open LIK	A-60
SIG-B-OLOC	No Blue Signal to Open LOC	A-61
SIG-B-OLOK	No Blue Signal to Open LOK	A-62
SIG-B-OUIC	No Blue Signal to Open UIC	A-63
SIG-B-OUIK	No Blue Signal to Open UIK	A-64
SIG-B-OUOC	No Blue Signal to Open UOC	A-65
SIG-B-OUOK	No Blue Signal to Open UOK	A-66
SIG-B-PD	No Blue Signal to LMRP Pri. Dis.	A-67
SIG-B-PSEL	No Blue Signal to Pod Select	A-68
SIG-B-SD	No Blue Signal to LMRP Sec. Dis.	A-69
SIG-B-UAC	No Blue Signal to Close UA	A-70
SIG-B-UHP	No Blue Signal to HP Close USR	A-71
SIG-B-UPR	No Blue Signal to Close UPR	A-72
SIG-B-USR	No Blue Signal to Close USR	A-73
SIG-B-VMEA	Common Blue Pod System A Failures	A-74
SIG-B-VMEB	Common Blue Pod System B Failures	A-75
SIG-B-YCS	No Blue Signal to Open Yellow Conduit Supply	A-76
SIG-B-YHLS	No Blue Signal to Open Yellow Hot Line Supply	A-77
SIG-Y-BCS	No Yellow Signal to Open Blue Conduit Supply	A-78
SIG-Y-BHLS	No Yellow Signal to Open Blue Hot Line Supply	A-79
SIG-Y-CHP	No Yellow Signal to HP Close CSR	A-80
SIG-Y-CLIC	No Yellow Signal to Close LIC	A-81
SIG-Y-CLIK	No Yellow Signal to Close LIK	A-82
SIG-Y-CLOC	No Yellow Signal to Close LOC	A-83
SIG-Y-CLOK	No Yellow Signal to Close LOK	A-84
SIG-Y-COM	Common Yellow Pod Signal Failures	A-85
SIG-Y-CSR	No Signal to Op. Yellow Casing Shear Ram Pilot Valve	A-86
SIG-Y-CUIC	No Yellow Signal to Close UIC	A-87
SIG-Y-CUIK	No Yellow Signal to Close UIK	A-88
SIG-Y-CUOC	No Yellow Signal to Close UOC	A-89
SIG-Y-CUOK	No Yellow Signal to Close UOK	A-90

Confidential Treatment Requested by Transocean Holdings LLC TRN-HCEC-00056441

Fault Tree List (continued)

FT Name	Description	Page
SIG-Y-LAC	No Yellow Signal to Close Lower Annular	A-91
SIG-Y-LPR	No Yellow Signal to Close LPR	A-92
SIG-Y-MPR	No Yellow Signal to Close MPR	A-93
SIG-Y-OLIC	No Yellow Signal to Open LIC	A-94
SIG-Y-OLIK	No Yellow Signal to Open LIK	A-95
SIG-Y-OLOC	No Yellow Signal to Open LOC	A-96
SIG-Y-OLOK	No Yellow Signal to Open LOK	A-97
SIG-Y-OUIC	No Yellow Signal to Open UIC	A-98
SIG-Y-OUIK	No Yellow Signal to Open UIK	A-99
SIG-Y-OUOC	No Yellow Signal to Open UOC	A-100
SIG-Y-OUOK	No Yellow Signal to Open UOK	A-101
SIG-Y-PD	No Yellow Signal to LMRP Pri. Dis.	A-102
SIG-Y-PSEL	No Yellow Signal to Pod Select	A-103
SIG-Y-SD	No Yellow Signal to LMRP Sec. Dis.	A-104
SIG-Y-UAC	No Yellow Signal to Close UA	A-105
SIG-Y-UHP	No Yellow Signal to HP Close USR	A-106
SIG-Y-UPR	No Yellow Signal to Close UPR	A-107
SIG-Y-USR	No Yellow Signal to Close USR	A-108
SIG-Y-VMEA	Common Yellow Pod System A Failures	A-109
SIG-Y-VMEB	Common Yellow Pod System B Failures	A-110
SIG-Y-YCS	No Yellow Signal to Open Yellow Conduit Supply	A-111
SIG-Y-YHLS	No Yellow Signal to Open Yellow Hot Line Supply	A-112
UPR	Failure of Upper Pipe Ram Failure of Upper Pipe Ram	A-113
UPS-A	Power Not Available from UPS-A	A-114
UPS-B	Power Not Available from UPS-B	A-115
USRAM	No Hydraulic Supply to Upper Shear Ram	A-116
W22	Power Not Available From CDP-A W22	A-117
W23	Power Not Available From CDP-B W23	A-118
W28-BCS	No W28 Open Blue Conduit Supply Signal From DP	A-119
W28-BHLS	No W28 Open Blue HL Supply Signal From DP	A-120
W28-C	No W28 Signal From DP - Common	A-121
W28-CHP	No W28 Signal From DP - HP Close CSR	A-122
W28-CLIC	No W28 Signal From DP - Close LIC	A-123
W28-CLIK	No W28 Signal From DP - Close LIK	A-124
W28-CLOC	No W28 Signal From DP - Close LOC	A-125
W28-CLOK	No W28 Signal From DP - Close LOK	A-126
W28-CSR	No W28 Signal From DP - Close CSR	A-127
W28-CUIC	No W28 Signal From DP - Close UIC	A-128
W28-CUIK	No W28 Signal From DP - Close UIK	A-129
W28-CUOC	No W28 Signal From DP - Close UOC	A-130
W28-CUOK	No W28 Signal From DP - Close UOK	A-131
W28-LAC	No W28 Close Lower Annular Signal From DP	A-132
W28-LPR	No W28 Signal From DP - Close LPR	A-133
W28-MPR	No W28 Signal From DP - Close MPR	A-134
W28-OLIC	No W28 Signal From DP - Open LIC	A-135
W28-OLIK	No W28 Signal From DP - Open LIK	A-136

Confidential Treatment Requested by Transocean Holdings LLC TRN-HCEC-00056442

Fault Tree List (continued)

FT Name	Description	Page
W28-OLOC	No W28 Signal From DP - Open LOC	A-137
W28-OLOK	No W28 Signal From DP - Open LOK	A-138
W28-OUIC	No W28 Signal From DP - Open UIC	A-139
W28-OUIK	No W28 Signal From DP - Open UIK	A-140
W28-OUOC	No W28 Signal From DP - Open UOC	A-141
W28-OUOK	No W28 Signal From DP - Open UOK	A-142
W28-PD	No W28 Signal From DP - LMRP Pri. Dis.	A-143
W28-PSEL	No W28 Signal From DP - Pod Select	A-144
W28-SD	No W28 Signal From DP - LMRP Sec. Dis.	A-145
W28-UAC	No W28 Signal From DP - Close UA	A-146
W28-UHP	No W28 Signal From DP - HP Close USR	A-147
W28-UPR	No W28 Signal From DP - Close UPR	A-148
W28-USR	No W28 Signal From DP - Close USR	A-149
W28-YCS	No W28 Open Yel. Conduit Supply Signal From DP	A-150
W28-YHLS	No W28 Open Yel. HL Supply Signal From DP	A-151
W29-BCS	No W29 Open Blue Conduit Supply Signal From DP	A-152
W29-BHLS	No W29 Open Blue HL Supply Signal From DP	A-153
W29-C	No W29 Signal From DP - Common	A-154
W29-CHP	No W29 Signal From DP - HP Close CSR	A-155
W29-CLIC	No W29 Signal From DP - Close LIC	A-156
W29-CLIK	No W29 Signal From DP - Close LIK	A-157
W29-CLOC	No W29 Signal From DP - Close LOC	A-158
W29-CLOK	No W29 Signal From DP - Close LOK	A-159
W29-CSR	No W29 Signal From DP - Close CSR	A-160
W29-CUIC	No W29 Signal From DP - Close UIC	A-161
W29-CUIK	No W29 Signal From DP - Close UIK	A-162
W29-CUOC	No W29 Signal From DP - Close UOC	A-163
W29-CUOK	No W29 Signal From DP - Close UOK	A-164
W29-LAC	No W29 Close Lower Annular Signal From DP	A-165
W29-LPR	No W29 Signal From DP - Close LPR	A-166
W29-MPR	No W29 Signal From DP - Close MPR	A-167
W29-OLIC	No W29 Signal From DP - Open LIC	A-168
W29-OLIK	No W29 Signal From DP - Open LIK	A-169
W29-OLOC	No W29 Signal From DP - Open LOC	A-170
W29-OLOK	No W29 Signal From DP - Open LOK	A-171
W29-OUIC	No W29 Signal From DP - Open UIC	A-172
W29-OUIK	No W29 Signal From DP - Open UIK	A-173
W29-OUOC	No W29 Signal From DP - Open UOC	A-174
W29-OUOK	No W29 Signal From DP - Open UOK	A-175
W29-PD	No W29 Signal From DP - LMRP Pri. Dis.	A-176
W29-PSEL	No W29 Signal From DP - Pod Select	A-177
W29-SD	No W29 Signal From DP - LMRP Sec. Dis.	A-178
W29-UAC	No W29 Signal From DP - Close UA	A-179
W29-UHP	No W29 Signal From DP - HP Close USR	A-180
W29-UPR	No W29 Signal From DP - Close UPR	A-181
W29-USR	No W29 Signal From DP - Close USR	A-182

Confidential Treatment Requested by Transocean Holdings LLC TRN-HCEC-00056443

Fault Tree List (continued)

FT Name	Description	Page
W29-YCS	No W29 Open Yel. Conduit Supply Signal From DP	A-183
W29-YHLS	No W29 Open Yel. HL Supply Signal From DP	A-184
W3	Power Not Available From CDP-A W3	A-185
W30-BCS	No W30 Open Blue Conduit Supply Signal From TPP	A-186
W30-BHLS	No W30 Open Blue HL Supply Signal From TPP	A-187
W30-C	No W30 Signal From TPP - Common	A-188
W30-CHP	No W30 Signal From TPP - HP Close CSR	A-189
W30-CLIC	No W30 Signal From TPP - Close LIC	A-190
W30-CLIK	No W30 Signal From TPP - Close LIK	A-191
W30-CLOC	No W30 Signal From TPP - Close LOC	A-192
W30-CLOK	No W30 Signal From TPP - Close LOK	A-193
W30-CSR	No W30 Signal From TPP - Close CSR	A-194
W30-CUIC	No W30 Signal From TPP - Close UIC	A-195
W30-CUIK	No W30 Signal From TPP - Close UIK	A-196
W30-CUOC	No W30 Signal From TPP - Close UOC	A-197
W30-CUOK	No W30 Signal From TPP - Close UOK	A-198
W30-LAC	No W30 Close Lower Annular Signal From TPP	A-199
W30-LPR	No W30 Signal From TPP - Close LPR	A-200
W30-MPR	No W30 Signal From TPP - Close MPR	A-201
W30-OLIC	No W30 Signal From TPP - Open LIC	A-202
W30-OLIK	No W30 Signal From TPP - Open LIK	A-203
W30-OLOC	No W30 Signal From TPP - Open LOC	A-204
W30-OLOK	No W30 Signal From TPP - Open LOK	A-205
W30-OUIC	No W30 Signal From TPP - Open UIC	A-206
W30-OUIK	No W30 Signal From TPP - Open UIK	A-207
W30-OUOC	No W30 Signal From TPP - Open UOC	A-208
W30-OUOK	No W30 Signal From TPP - Open UOK	A-209
W30-PD	No W30 Signal From TPP - LMRP Pri. Dis.	A-210
W30-PSEL	No W30 Signal From TPP - Pod Select	A-211
W30-SD	No W30 Signal From TPP - LMRP Sec. Dis.	A-212
W30-UAC	No W30 Signal From TPP - Close UA	A-213
W30-UHP	No W30 Signal From TPP - HP Close USR	A-214
W30-UPR	No W30 Signal From TPP - Close UPR	A-215
W30-USR	No W30 Signal From TPP - Close USR	A-216
W30-YCS	No W30 Open Yel. Conduit Supply Signal From TPP	A-217
W30-YHLS	No W30 Open Yel. HL Supply Signal From TPP	A-218
W31-BCS	No W31 Open Blue Conduit Supply Signal From TPP	A-219
W31-BHLS	No W31 Open Blue HL Supply Signal From TPP	A-220
W31-C	No W31 Signal From TPP - Common	A-221
W31-CHP	No W31 Signal From TPP - HP Close CSR	A-222
W31-CLIC	No W31 Signal From TPP - Close LIC	A-223
W31-CLIK	No W31 Signal From TPP - Close LIK	A-224
W31-CLOC	No W31 Signal From TPP - Close LOC	A-225
W31-CLOK	No W31 Signal From TPP - Close LOK	A-226
W31-CSR	No W31 Signal From TPP - Close CSR	A-227
W31-CUIC	No W31 Signal From TPP - Close UIC	A-228

Confidential Treatment Requested by Transocean Holdings LLC TRN-HCEC-00056444

Fault Tree List (continued)

FT Name	Description	Page
W31-CUIK	No W31 Signal From TPP - Close UIK	A-229
W31-CUOC	No W31 Signal From TPP - Close UOC	A-230
W31-CUOK	No W31 Signal From TPP - Close UOK	A-231
W31-LAC	No W31 Close Lower Annular Signal From TPP	A-232
W31-LPR	No W31 Signal From TPP - Close LPR	A-233
W31-MPR	No W31 Signal From TPP - Close MPR	A-234
W31-OLIC	No W31 Signal From TPP - Open LIC	A-235
W31-OLIK	No W31 Signal From TPP - Open LIK	A-236
W31-OLOC	No W31 Signal From TPP - Open LOC	A-237
W31-OLOK	No W31 Signal From TPP - Open LOK	A-238
W31-OUIC	No W31 Signal From TPP - Open UIC	A-239
W31-OUIK	No W31 Signal From TPP - Open UIK	A-240
W31-OUOC	No W31 Signal From TPP - Open UOC	A-241
W31-OUOK	No W31 Signal From TPP - Open UOK	A-242
W31-PD	No W31 Signal From TPP - LMRP Pri. Dis.	A-243
W31-PSEL	No W31 Signal From TPP - Pod Select	A-244
W31-SD	No W31 Signal From TPP - LMRP Sec. Dis.	A-245
W31-UAC	No W31 Signal From TPP - Close UA	A-246
W31-UHP	No W31 Signal From TPP - HP Close USR	A-247
W31-UPR	No W31 Signal From TPP - Close UPR	A-248
W31-USR	No W31 Signal From TPP - Close USR	A-249
W31-YCS	No W31 Open Yel. Conduit Supply Signal From TPP	A-250
W31-YHLS	No W31 Open Yel. HL Supply Signal From TPP	A-251
W39	No W39 Signal From CCUWS	A-252
W4	Power Not Available From CDP-B W4	A-253
W5	Power Not Available From CDP-A W5	A-254
W51-COM	Common W51 Signal Faults	A-255
W52-COM	Common W52 Signal Faults	A-256
W53-COM	Common W53 Signal Faults	A-257
W54-COM	Common W54 Signal Faults	A-258
W6	Power Not Available From CDP-B W6	A-259
W60	No Blue Power Supply -W60	A-260
W61	No Yellow Power Supply -W61	A-261
W62-BCS	No W62 Signal to Blue Pod	A-262
W62-BHLS	No W62 Signal to Blue Pod	A-263
W62-CHP	No W62 Signal to Blue Pod	A-264
W62-CLIC	No W62 Signal Close LIC to Blue Pod	A-265
W62-CLIK	No W62 Signal Close LIK to Blue Pod	A-266
W62-CLOC	No W62 Signal Close LOC to Blue Pod	A-267
W62-CLOK	No W62 Signal Close LOK to Blue Pod	A-268
W62-CSR	No W62 Signal to Blue Pod	A-269
W62-CUIC	No W62 Signal Close UIC to Blue Pod	A-270
W62-CUIK	No W62 Signal Close UIK to Blue Pod	A-271
W62-CUOC	No W62 Signal Close UOC to Blue Pod	A-272
W62-CUOK	No W62 Signal Close UOK to Blue Pod	A-273
W62-LAC	No W62 Signal to Blue Pod	A-274

Confidential Treatment Requested by Transocean Holdings LLC TRN-HCEC-00056445

Fault Tree List (continued)

FT Name	Description	Page
W62-LPR	No W62 Signal Close LPR to Blue Pod	A-275
W62-MPR	No W62 Signal Close MPR to Blue Pod	A-276
W62-OLIC	No W62 Signal Open LIC to Blue Pod	A-277
W62-OLIK	No W62 Signal Open LIK to Blue Pod	A-278
W62-OLOC	No W62 Signal Open LOC to Blue Pod	A-279
W62-OLOK	No W62 Signal Open LOK to Blue Pod	A-280
W62-OUIC	No W62 Signal Open UIC to Blue Pod	A-281
W62-OUIK	No W62 Signal Open UIK to Blue Pod	A-282
W62-OUOC	No W62 Signal Open UOC to Blue Pod	A-283
W62-OUOK	No W62 Signal Open UOK to Blue Pod	A-284
W62-PD	No W62 Signal LMRP Pri. Dis. to Blue Pod	A-285
W62-PSEL	No W62 Signal Pod Select to Blue Pod	A-286
W62-SD	No W62 Signal LMRP Sec. Dis. to Blue Pod	A-287
W62-UAC	No W62 Signal Close UA to Blue Pod	A-288
W62-UHP	No W62 Signal HP Close USR to Blue Pod	A-289
W62-UPR	No W62 Signal Close UPR to Blue Pod	A-290
W62-USR	No W62 Signal Close USR to Blue Pod	A-291
W62-YCS	No W62 Signal to Blue Pod	A-292
W62-YHLS	No W62 Signal to Blue Pod	A-293
W63-BCS	No W63 Signal to Yellow Pod	A-294
W63-BHLS	No W63 Signal to Yellow Pod	A-295
W63-CHP	No W63 Signal to Yellow Pod	A-296
W63-CLIC	No W63 Signal Close LIC to Yellow Pod	A-297
W63-CLIK	No W63 Signal Close LIK to Yellow Pod	A-298
W63-CLOC	No W63 Signal Close LOC to Yellow Pod	A-299
W63-CLOK	No W63 Signal Close LOK to Yellow Pod	A-300
W63-CSR	No W63 Signal to Yellow Pod	A-301
W63-CUIC	No W63 Signal Close UIC to Yellow Pod	A-302
W63-CUIK	No W63 Signal Close UIK to Yellow Pod	A-303
W63-CUOC	No W63 Signal Close UOC to Yellow Pod	A-304
W63-CUOK	No W63 Signal Close UOK to Yellow Pod	A-305
W63-LAC	No W63 Signal to Yellow Pod	A-306
W63-LPR	No W63 Signal Close LPR to Yellow Pod	A-307
W63-MPR	No W63 Signal Close MPR to Yellow Pod	A-308
W63-OLIC	No W63 Signal Open LIC to Yellow Pod	A-309
W63-OLIK	No W63 Signal Open LIK to Yellow Pod	A-310
W63-OLOC	No W63 Signal Open LOC to Yellow Pod	A-311
W63-OLOK	No W63 Signal Open LOK to Yellow Pod	A-312
W63-OUIC	No W63 Signal Open UIC to Yellow Pod	A-313
W63-OUIK	No W63 Signal Open UIK to Yellow Pod	A-314
W63-OUOC	No W63 Signal Open UOC to Yellow Pod	A-315
W63-OUOK	No W63 Signal Open UOK to Yellow Pod	A-316
W63-PD	No W63 Signal LMRP Pri. Dis. to Yellow Pod	A-317
W63-PSEL	No W63 Signal Pod Select to Yellow Pod	A-318
W63-SD	No W63 Signal LMRP Sec. Dis. to Yellow Pod	A-319
W63-UAC	No W63 Signal Close UA to Yellow Pod	A-320

Confidential Treatment Requested by Transocean Holdings LLC TRN-HCEC-00056446

Fault Tree List (continued)

FT Name	Description	Page
W63-UHP	No W63 Signal HP Close USR to Yellow Pod	A-321
W63-UPR	No W63 Signal Close UPR to Yellow Pod	A-322
W63-USR	No W63 Signal Close USR to Yellow Pod	A-323
W63-YCS	No W63 Signal to Yellow Pod	A-324
W63-YHLS	No W63 Signal to Yellow Pod	A-325
W9	No W9 Signal From CCUWS	A-326
Y-HOTLINE	No Hydraulic Supply from Yellow Hot Line	A-327
Y-HYD	No Yellow Hydraulic Manifold Supply	A-328
Y-LA-REG	Yellow LA Regulator Fails to Provide 3000 psi Supply	A-329
Y-PILOT	No Yellow Pilot Hydraulic Supply	A-330
Y-POD	No Yellow Hydraulic Pod Supply	A-331
Y-PSC-REG	Yellow LMRP Connector Reg. Fails to Provide 3000 psi Supply	A-332
Y-RIGID	No Yellow Hydraulic Supply from Rigid Conduit	A-333
Y-UA-REG	Yellow UA Regulator Fails to Provide 3000 psi Supply	A-334

Confidential Treatment Requested by Transocean Holdings LLC TRN-HCEC-00056447

Confidential Treatment Requested by Transocean Holdings LLC

TRN-HCEC-00056448

Emergency Disconnect Sequence Fails

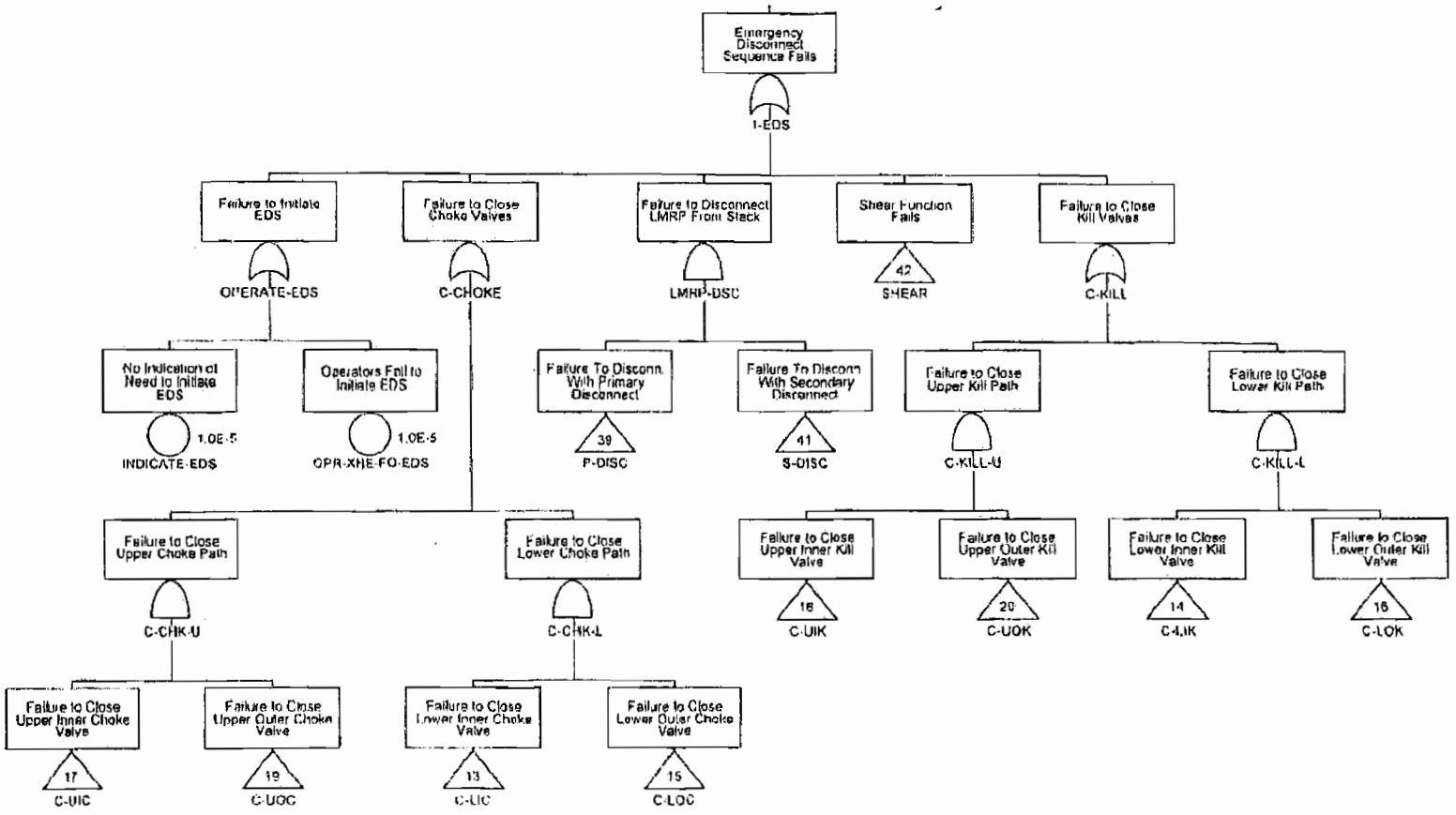

Confidential Treatment Requested by Transocean Holdings LLC

TRN-HCEC-00056449

Failure of Well Control Operations

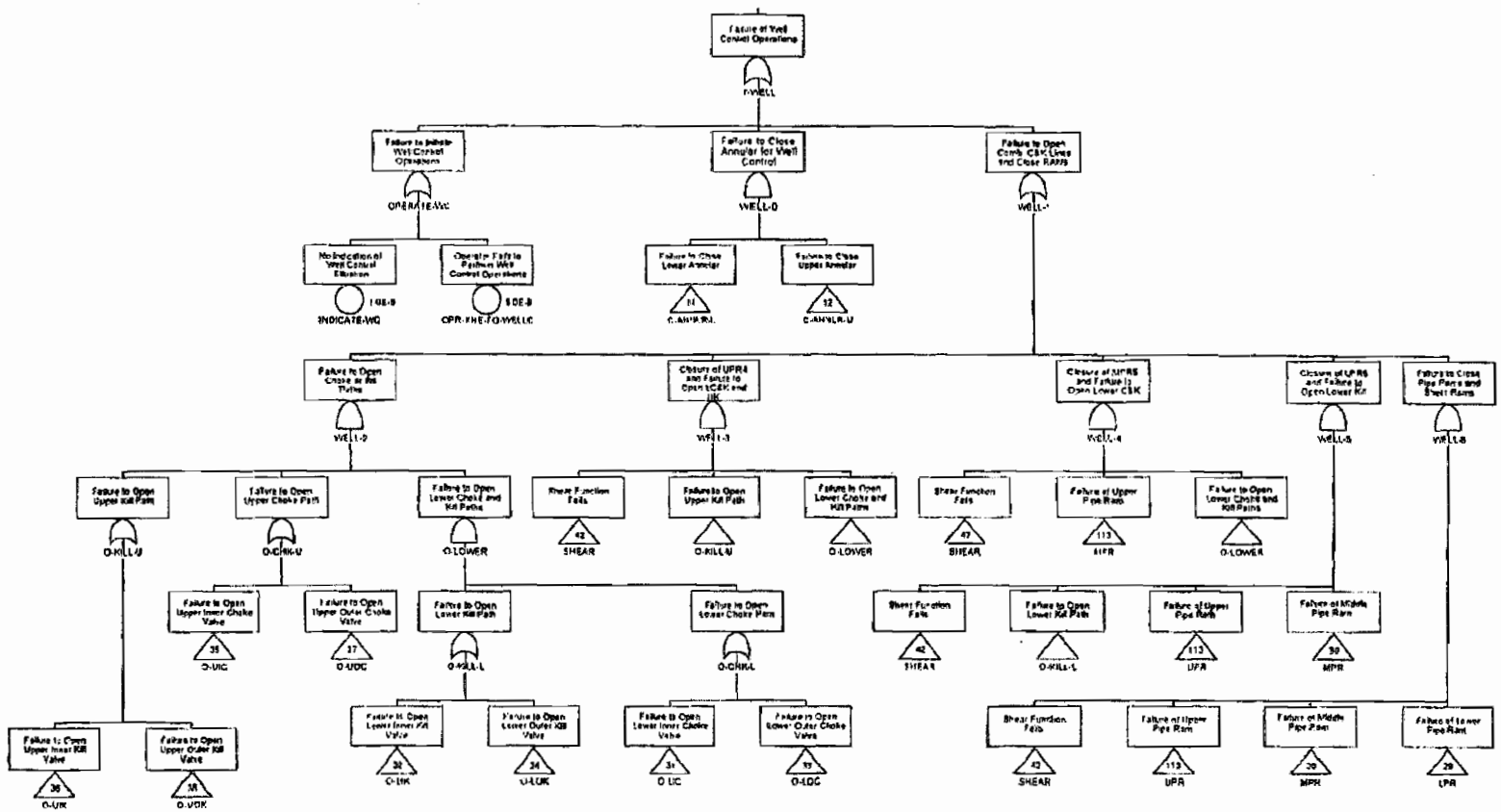

1-WELL - Failure of Well Control Operations 2000/03/01 Page A-2

Confidential Treatment Requested by Transocean Holdings LLC

TRN-HCEC-00056450

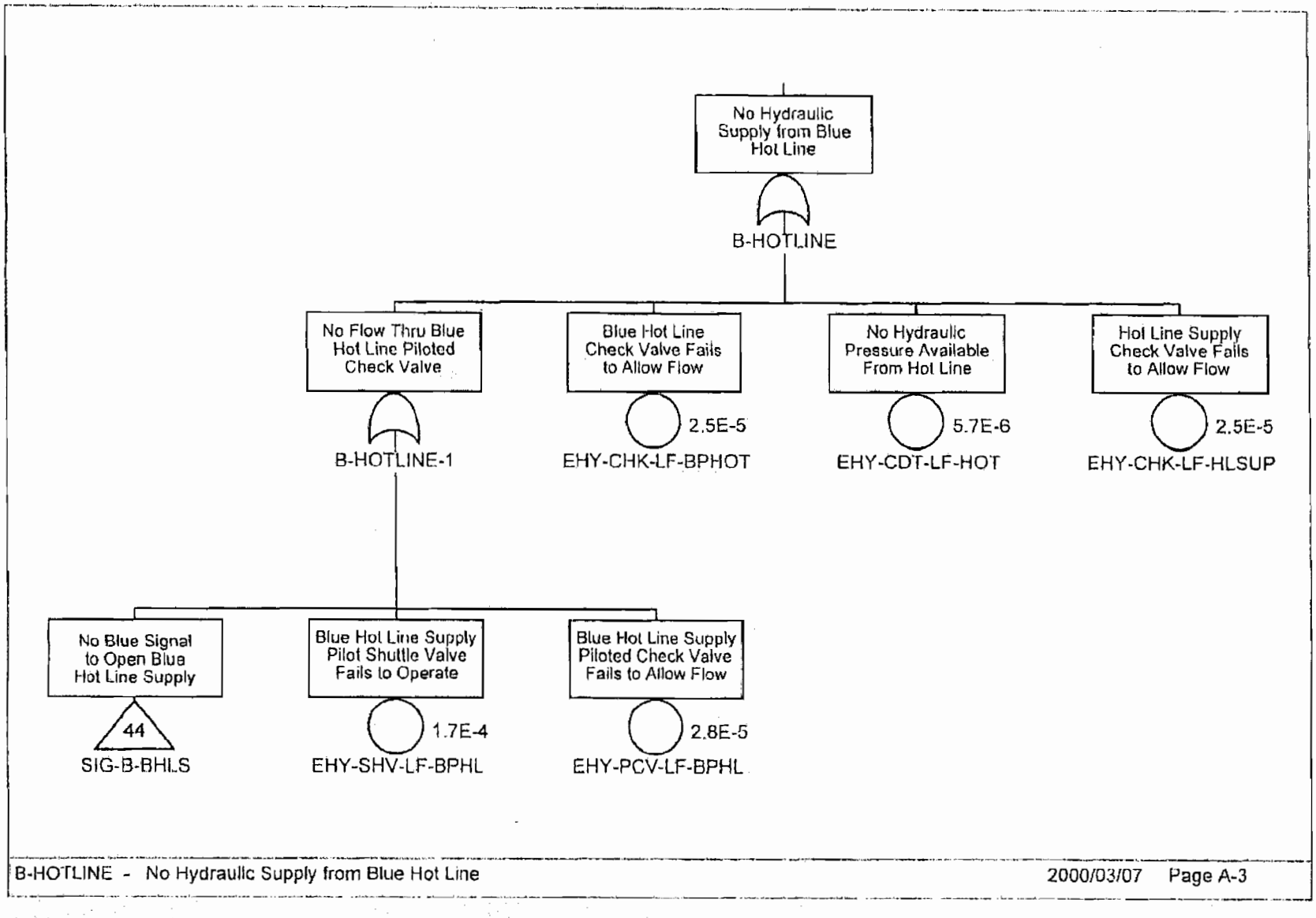

Confidential Treatment Requested by Transocean Holdings LLC

TRN-HCEC-00056451

No Blue Hydraulic Manifold Supply

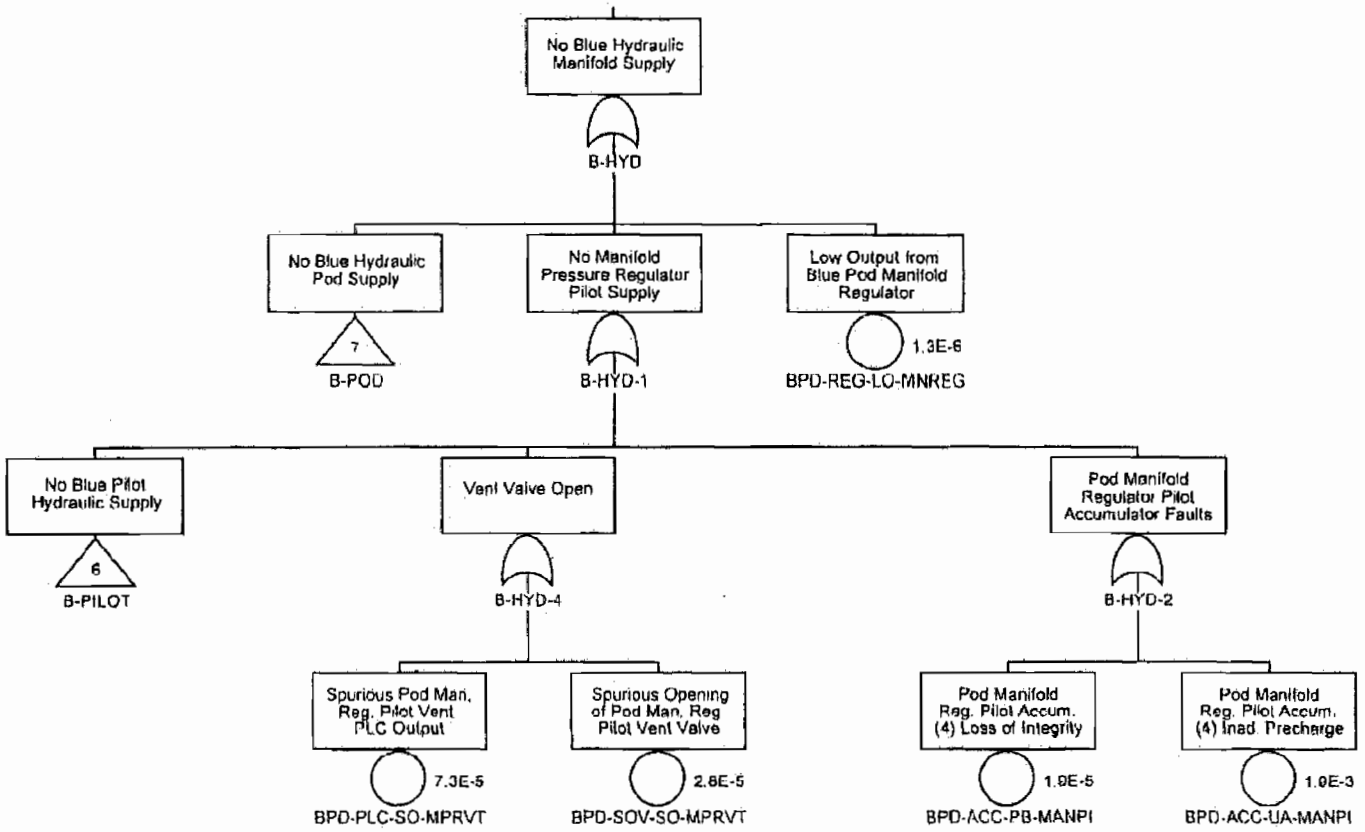

Confidential Treatment Requested by Transocean Holdings LLC

TRN-HCEC-00056452

Blue LA Regulator Fails to Provide 3000 psi Supply

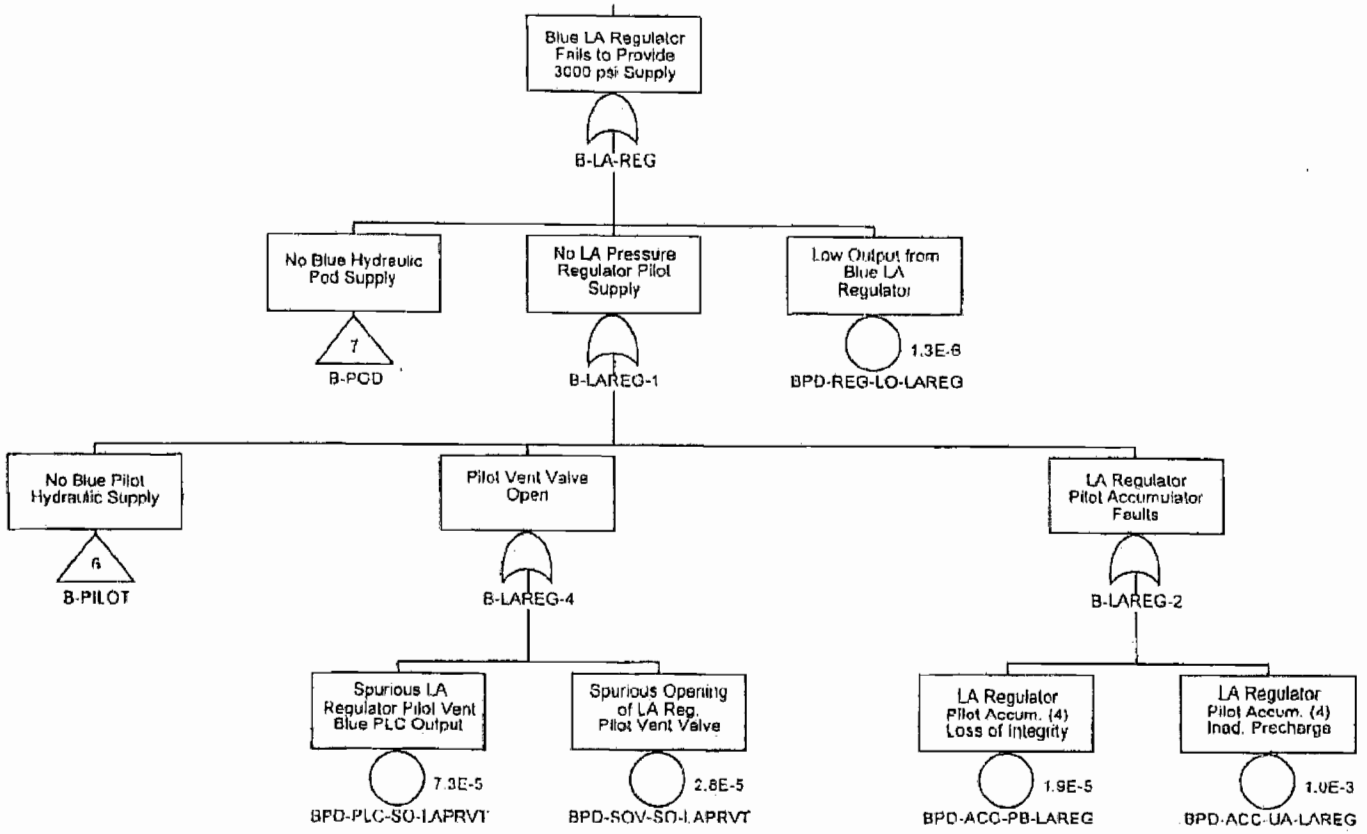

Confidential Treatment Requested by Transocean Holdings LLC

TRN-HCEC-00056453

No Blue Pilot Hydraulic Supply

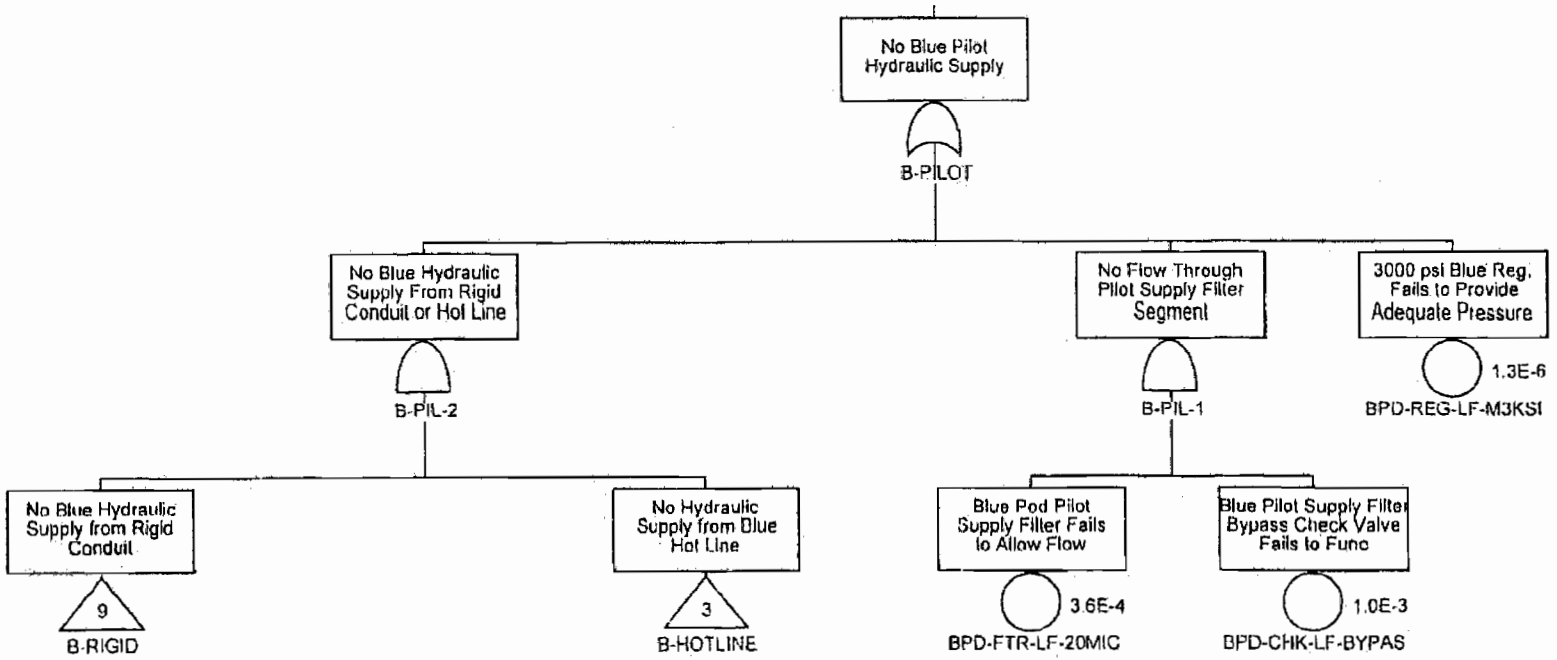

Confidential Treatment Requested by Transocean Holdings LLC

TRN-HCEC-00056454

No Blue Hydraulic Pod Supply

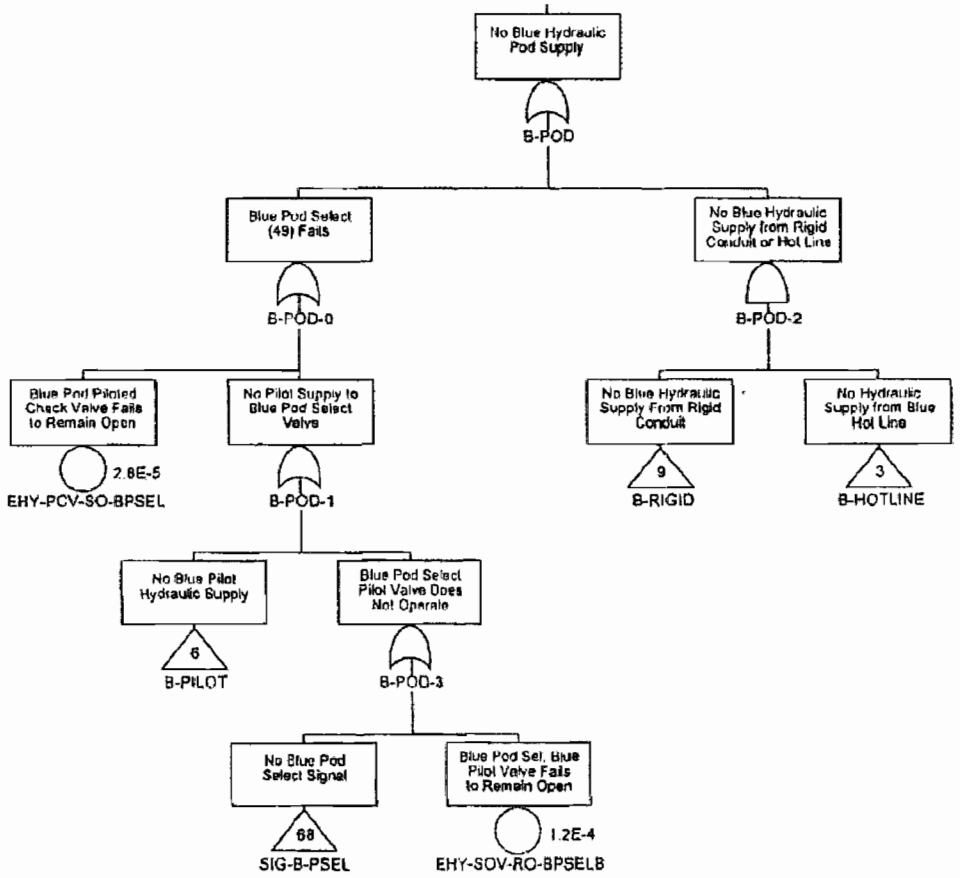

Confidential Treatment Requested by Transocean Holdings LLC

TRN-HCEC-00056455

Blue LMRP Connector Reg. Fails to Provide 3000 psi Supply

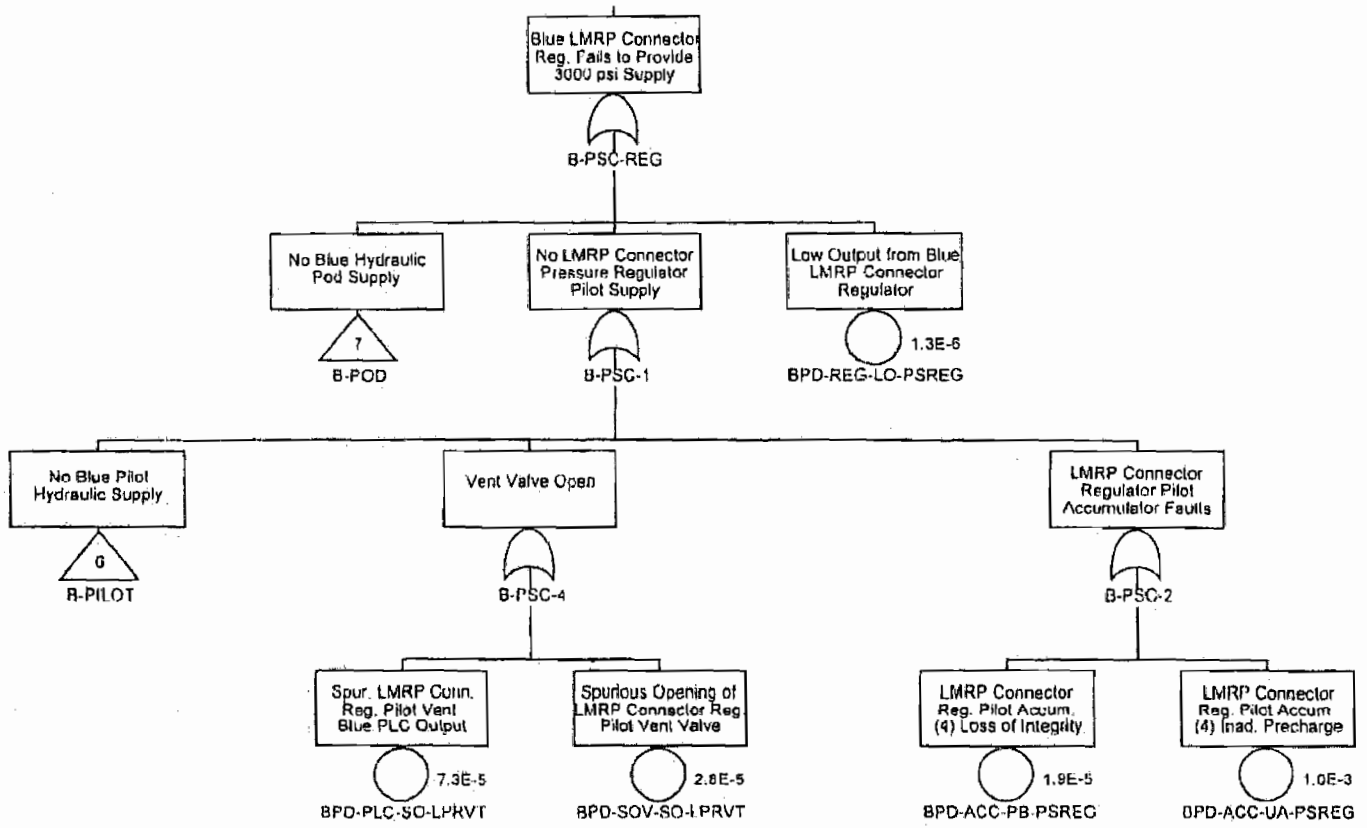

Confidential Treatment Requested by Transocean Holdings LLC

TRN-HCEC-00056456

No Blue Hydraulic Supply from Rigid Conduit

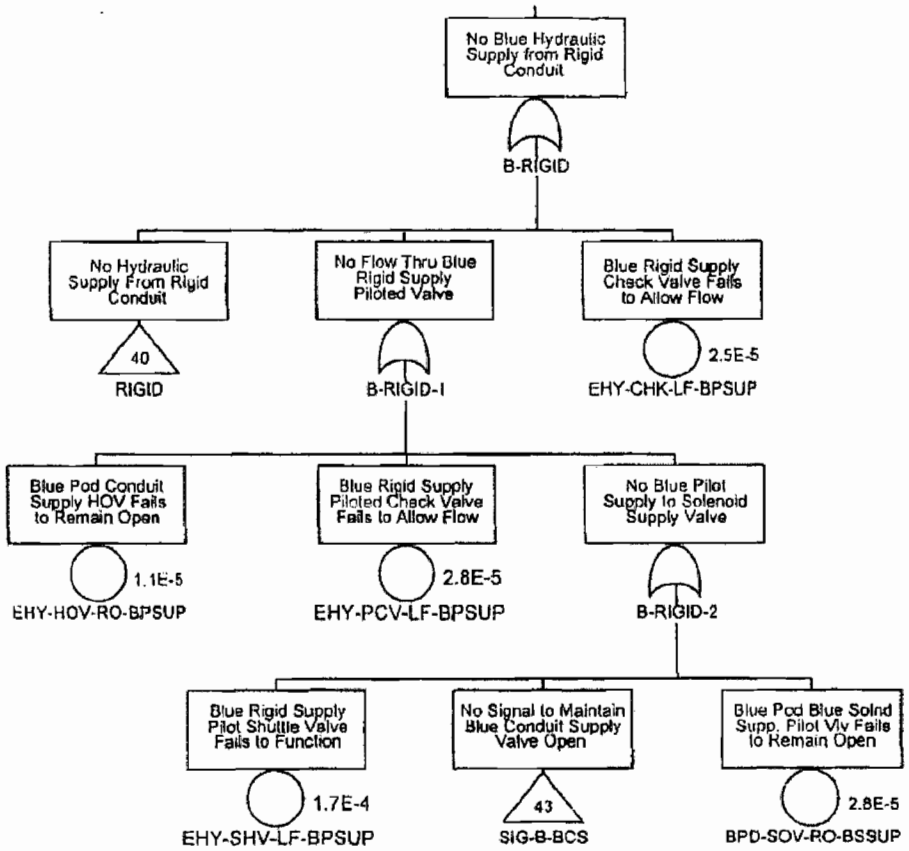

Confidential Treatment Requested by Transocean Holdings LLC

TRN-HCEC-00056457

Blue UA Regulator Fails to Provide 3000 psi Supply

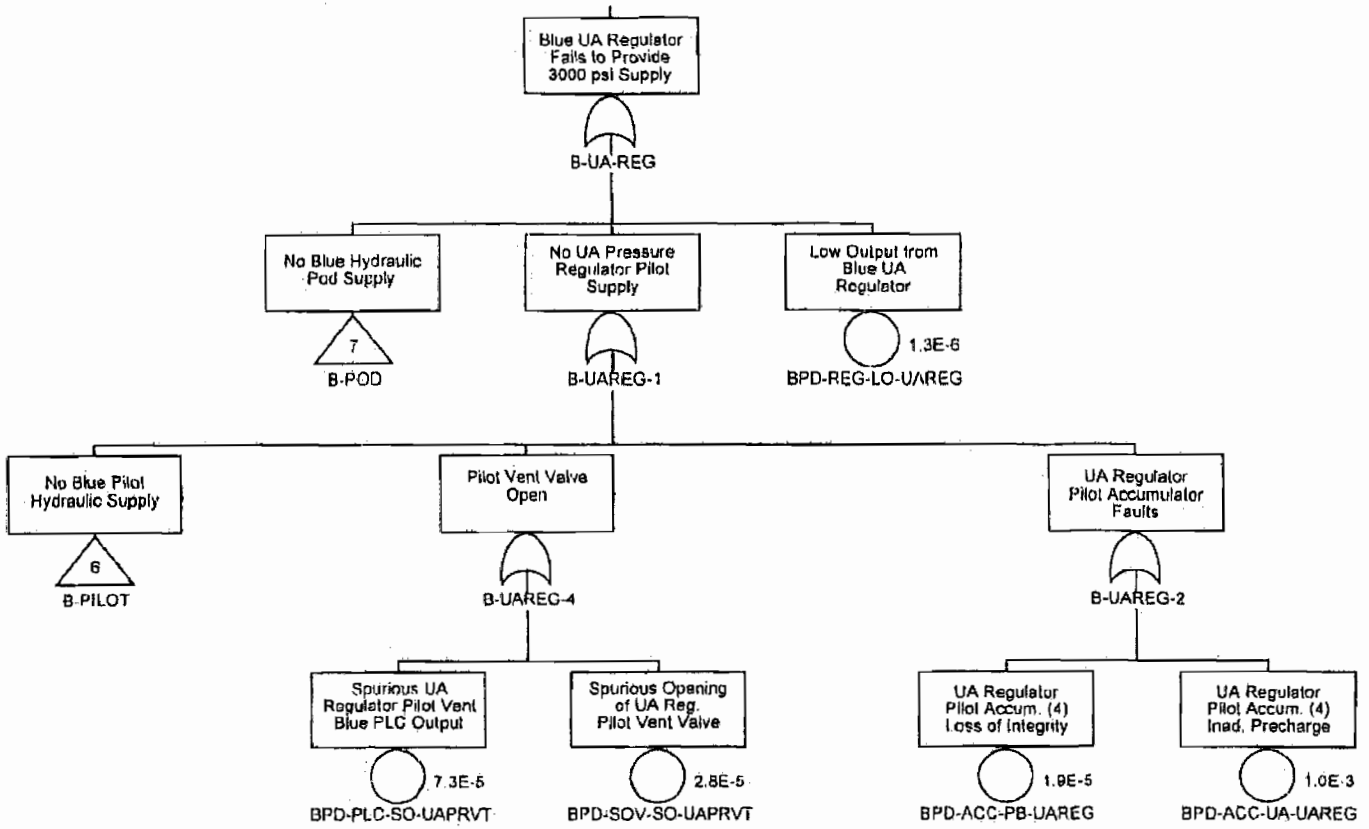

Confidential Treatment Requested by Transocean Holdings LLC

TRN-HCEC-00056458

No Hydraulic Supply to Close Lower Annular

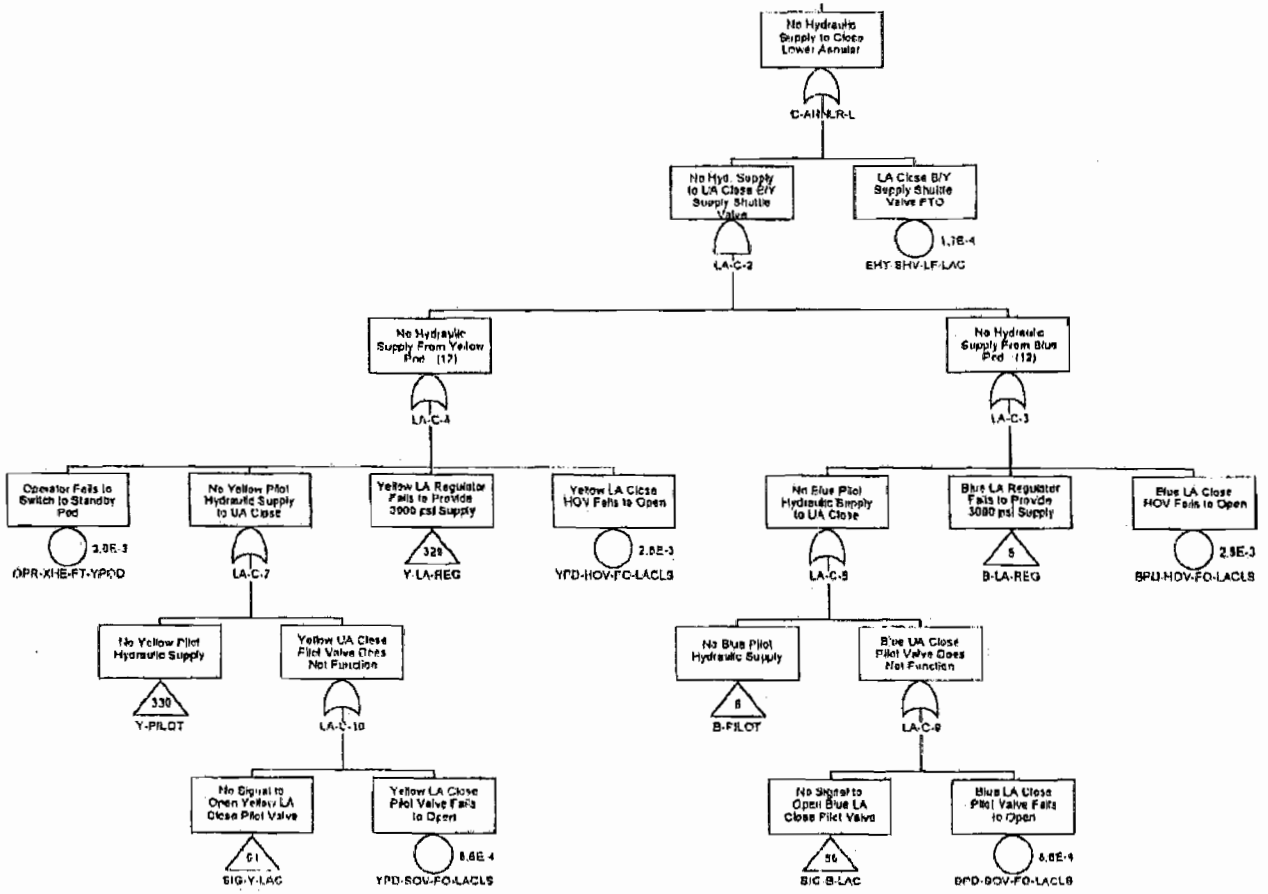

Confidential Treatment Requested by Transocean Holdings LLC

TRN-HCEC-00056459

No Hydraulic Supply to Close Upper Annular

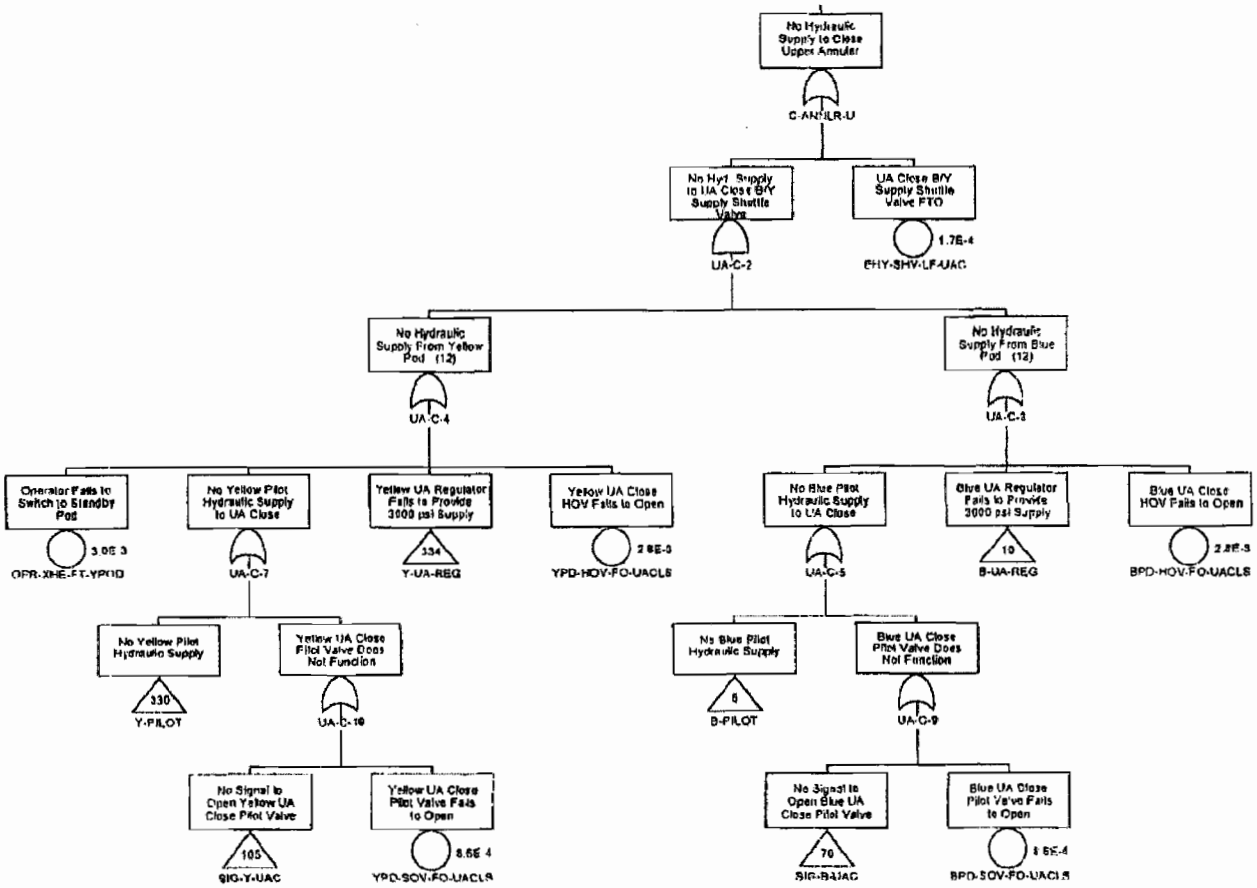

Confidential Treatment Requested by Transocean Holdings LLC

TRN-HCEC-00056460

Failure to Close Lower Inner Choke Valve

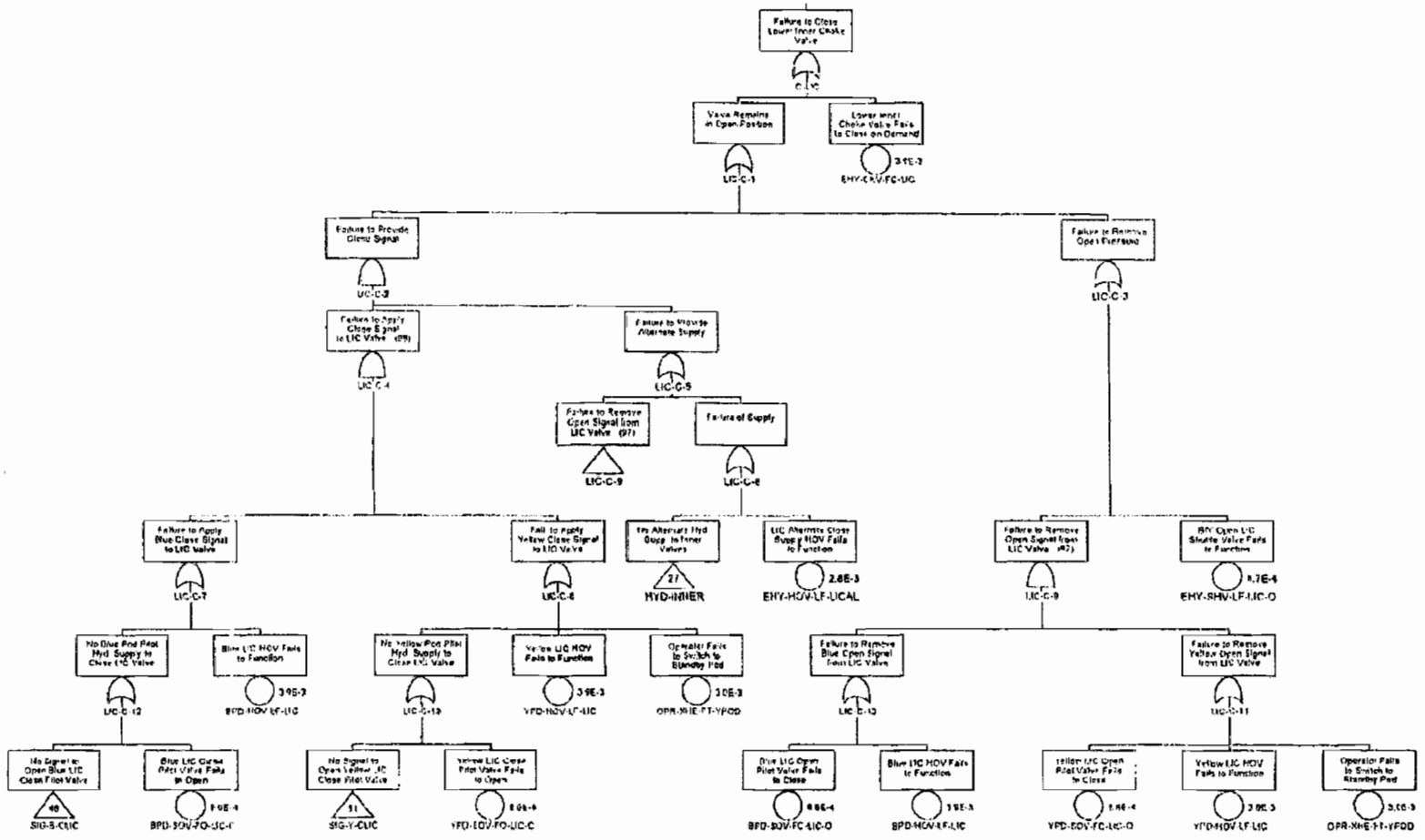

Confidential Treatment Requested by Transocean Holdings LLC

TRN-HCEC-00056461

Failure to Close Lower Inner Kill Valve

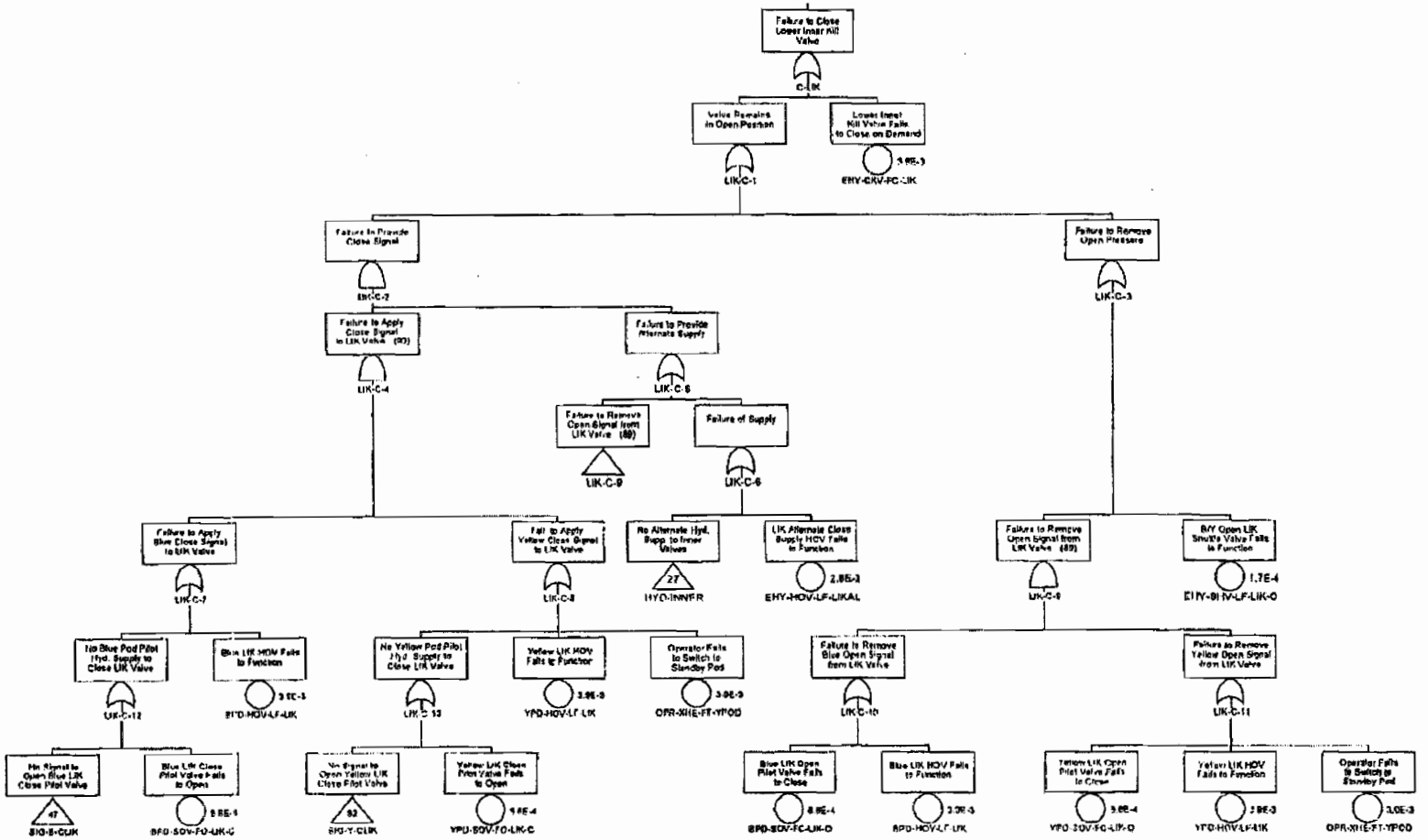

Confidential Treatment Requested by Transocean Holdings LLC

TRN-HCEC-00056462

Failure to Close Lower Outer Choke Valve

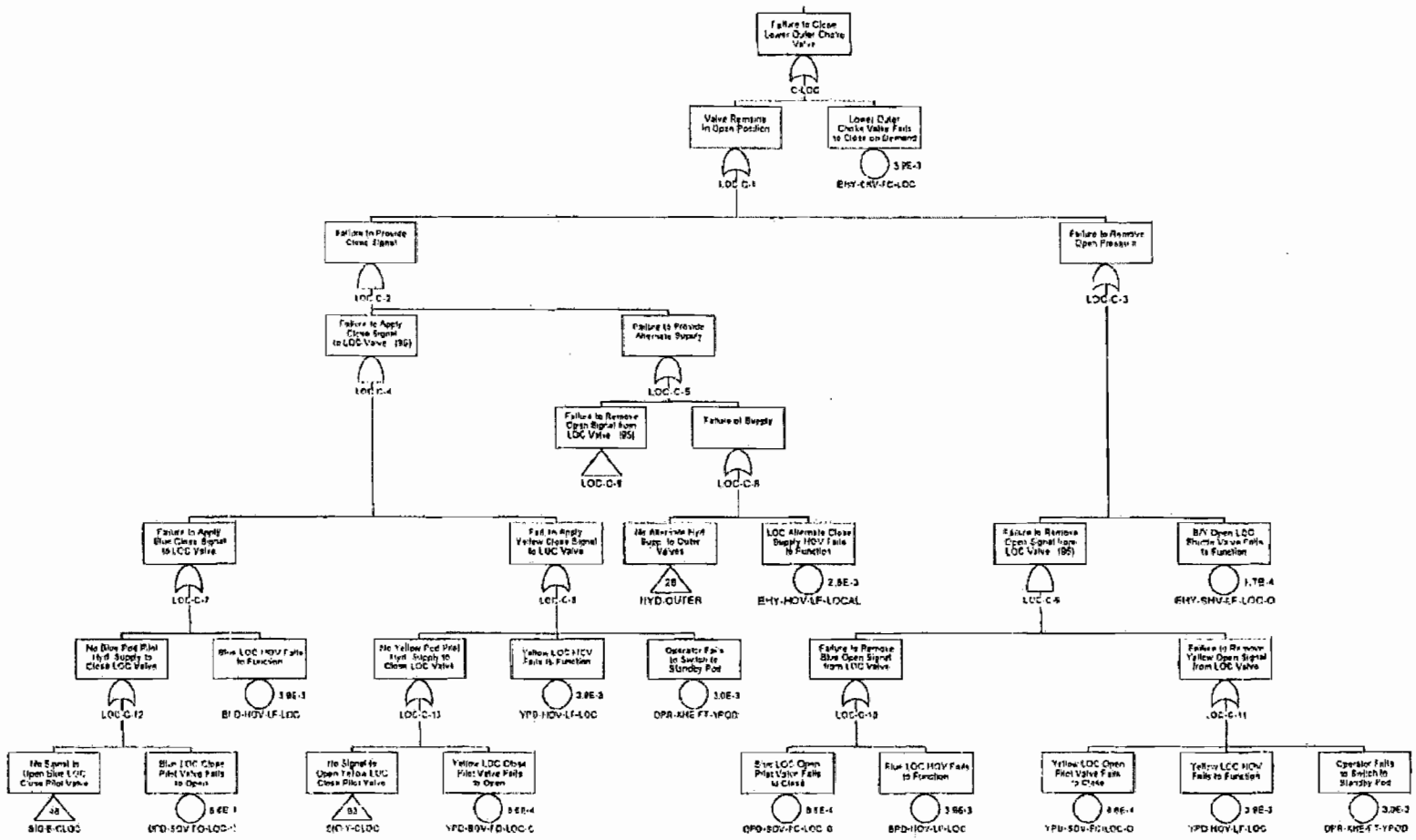

Confidential Treatment Requested by Transocean Holdings LLC

TRN-HCEC-00056463

Failure to Close Lower Outer Kill Valve

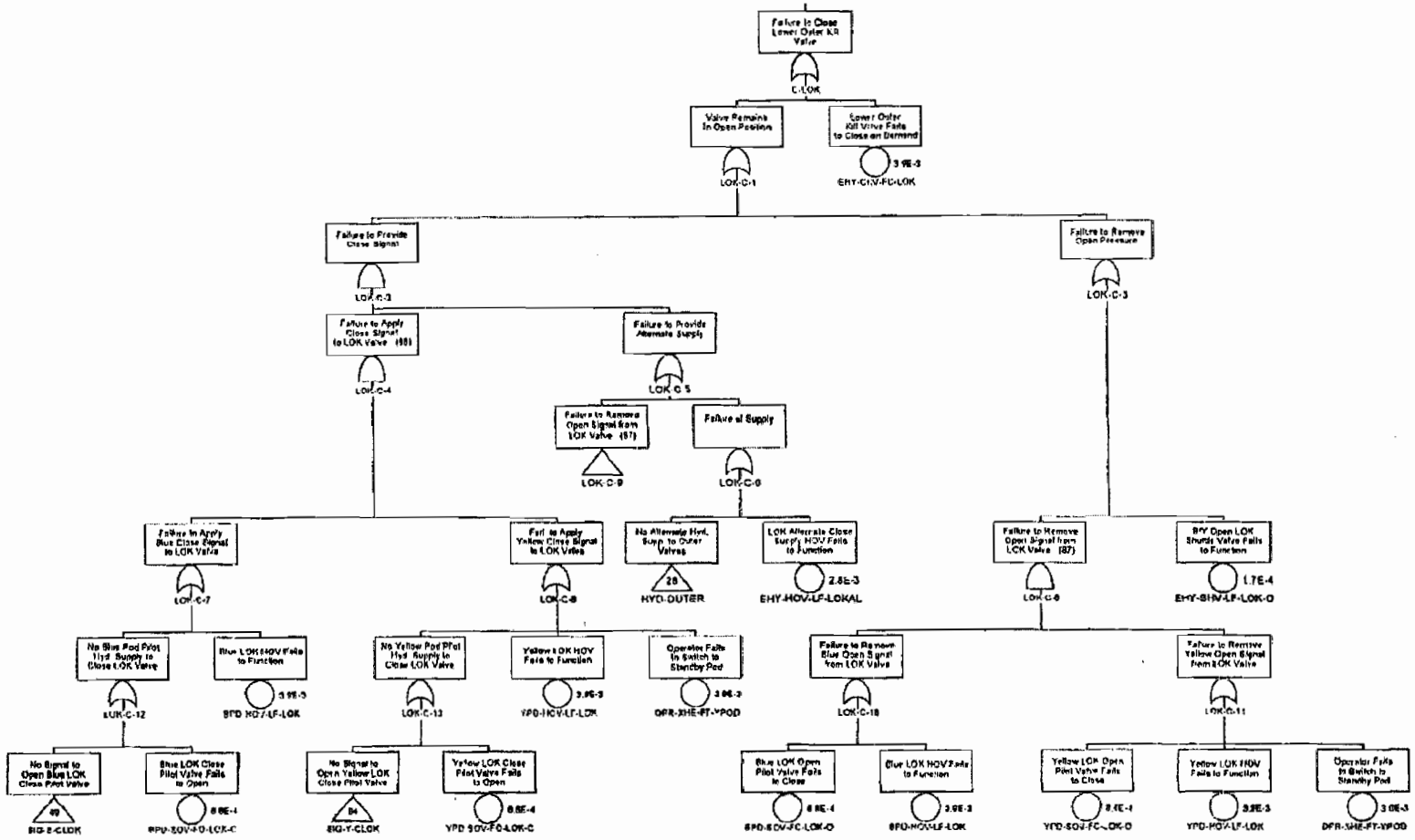

Confidential Treatment Requested by Transocean Holdings LLC

TRN-HCEC-00056464

Failure to Close Upper Inner Choke Valve

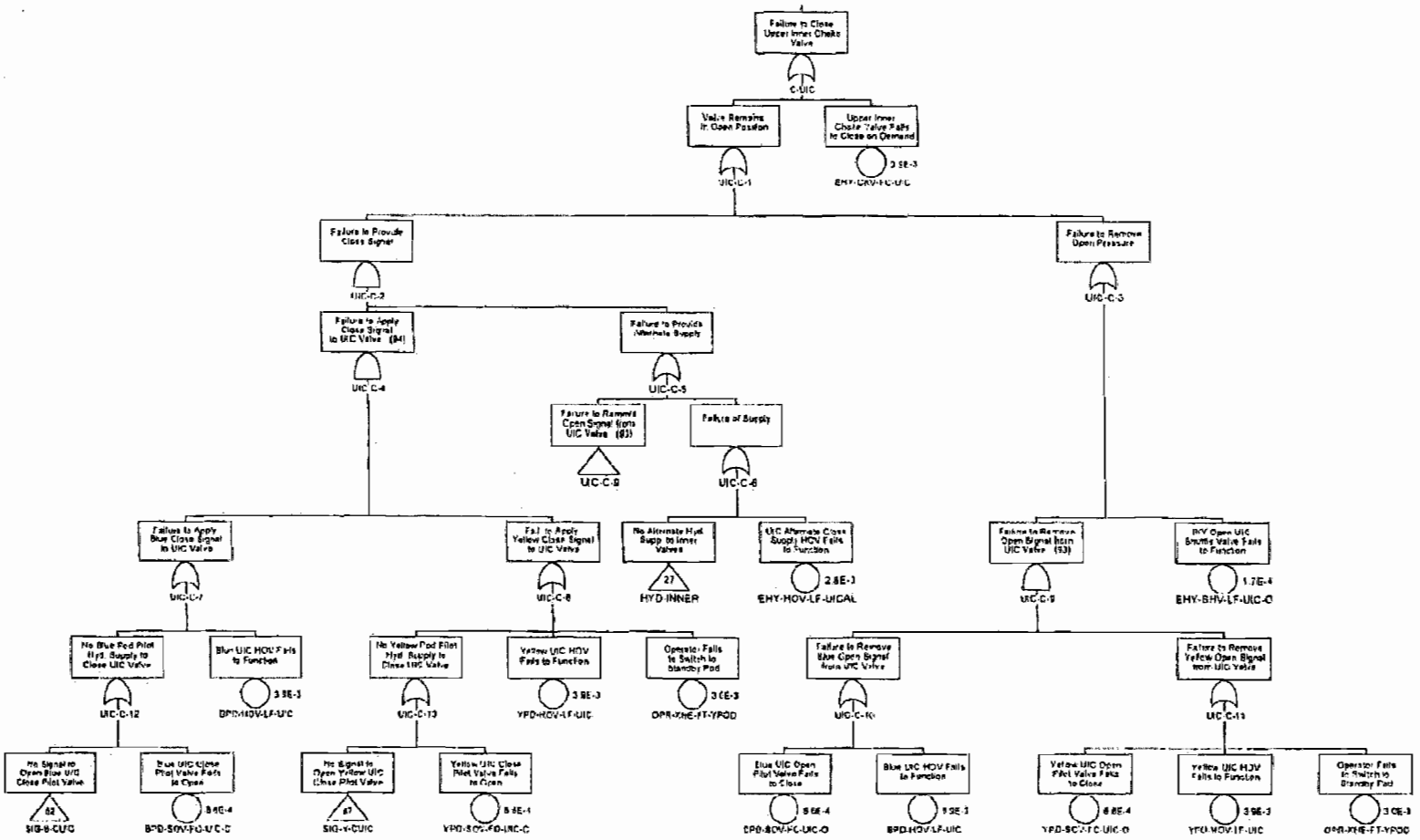

Confidential Treatment Requested by Transocean Holdings LLC

TRN-HCEC-00056465

Failure to Close Upper Inner Kill Valve

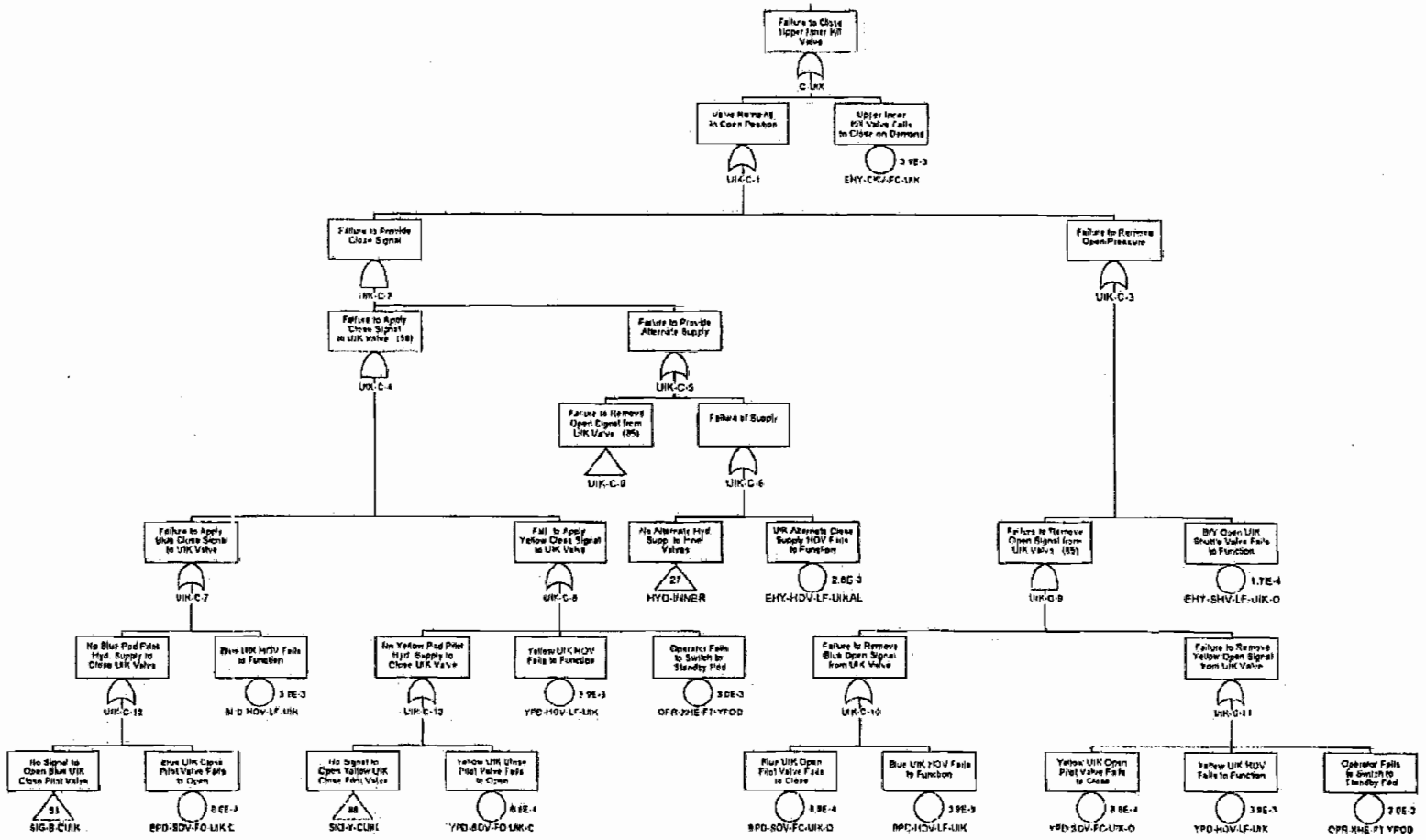

Confidential Treatment Requested by Transocean Holdings LLC

TRN-HCEC-00056466

Failure to Close Upper Outer Choke Valve

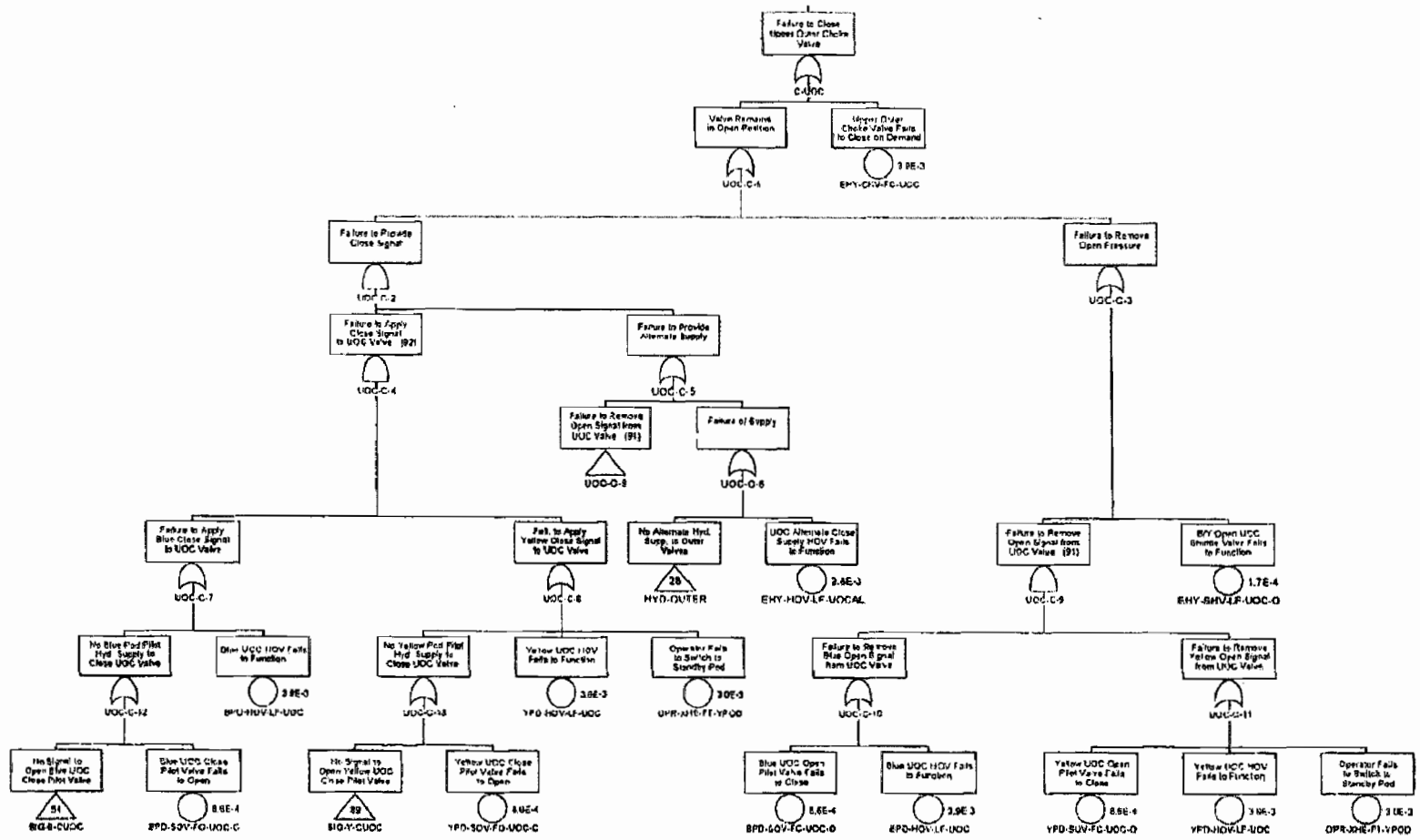

Confidential Treatment Requested by Transocean Holdings LLC

TRN-HCEC-00056467

Failure to Close Upper Outer Kill Valve

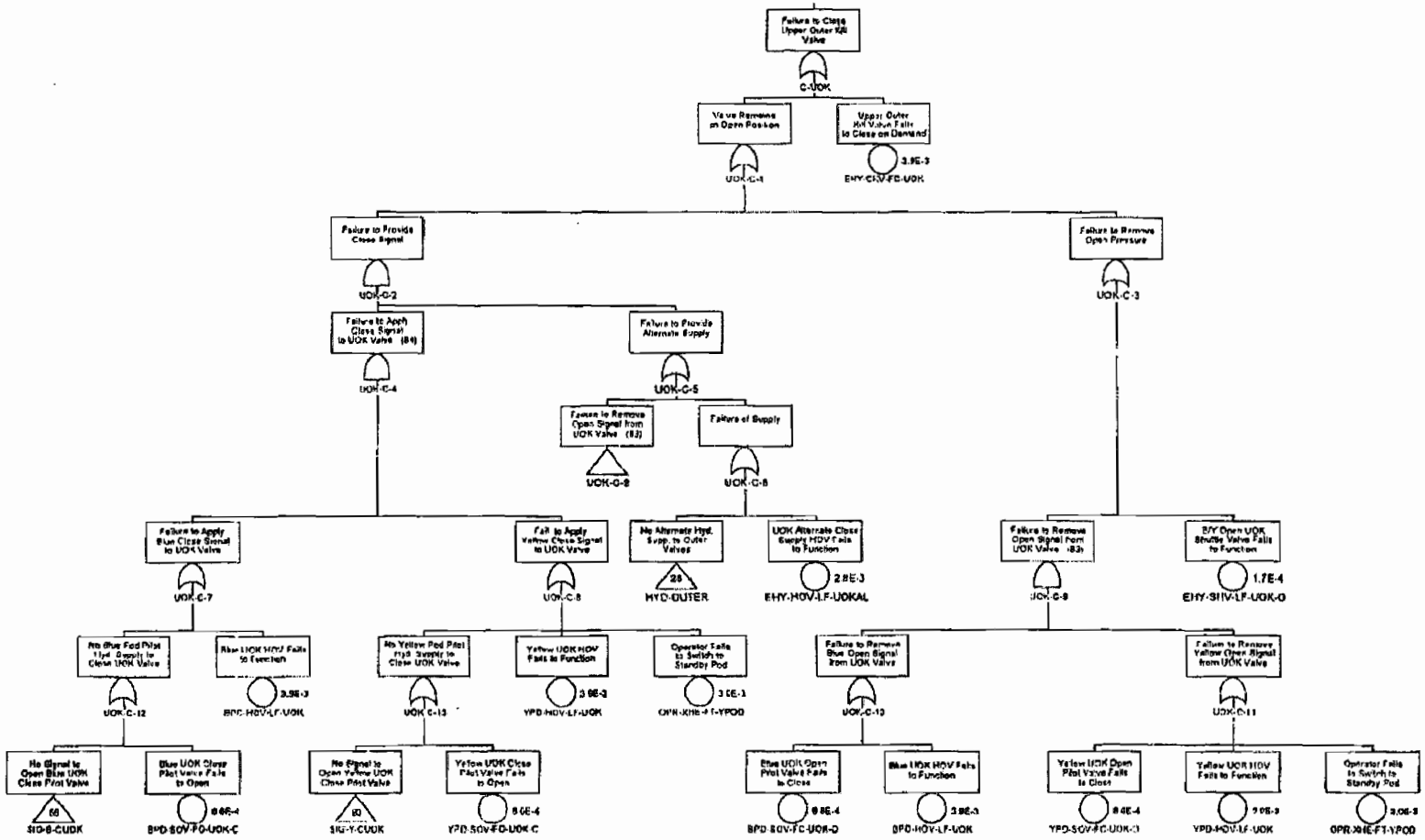

Confidential Treatment Requested by Transocean Holdings LLC

TRN-HCEC-00056468

No Hydraulic Supply to Casing Shear Ram

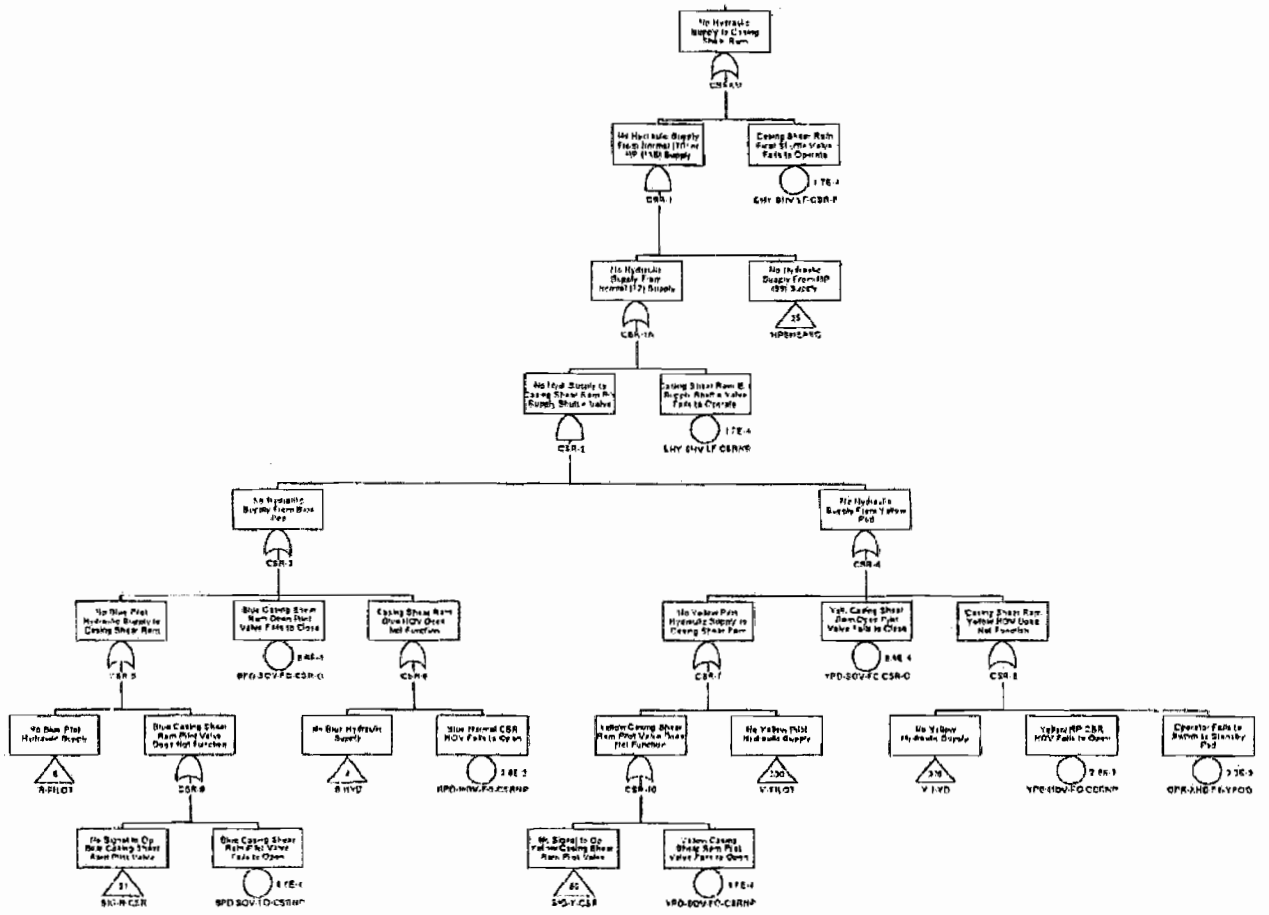

Confidential Treatment Requested by Transocean Holdings LLC

TRN-HCEC-00056469

No HP Hydraulic Supply

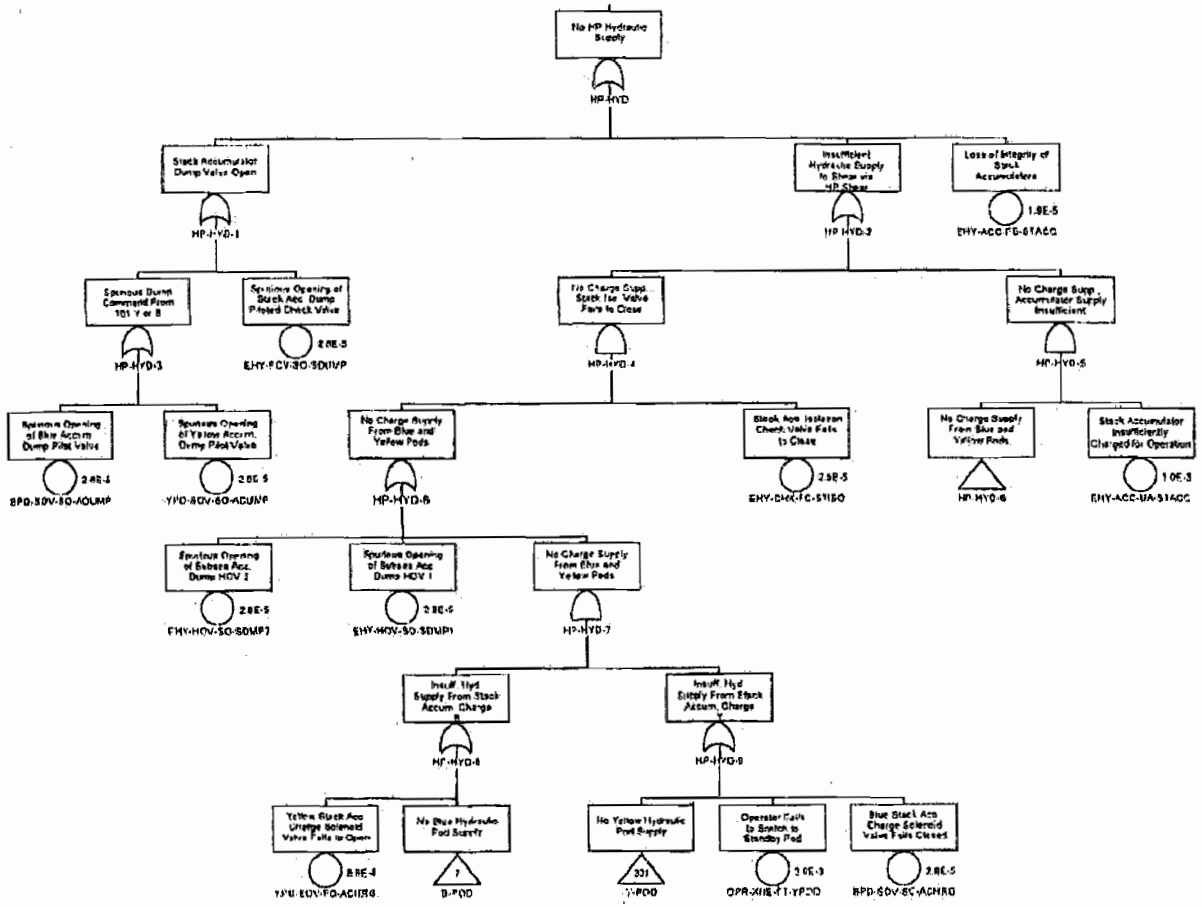

Confidential Treatment Requested by Transocean Holdings LLC

TRN-HCEC-00056470

No BSR HP Hydraulic Supply

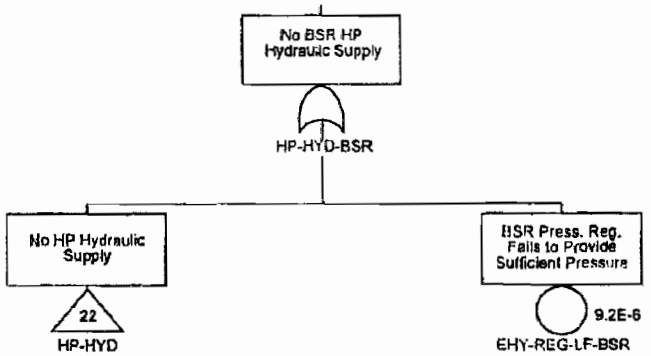

Confidential Treatment Requested by Transocean Holdings LLC

TRN-HCEC-00056471

No CSR HP Hydraulic Supply

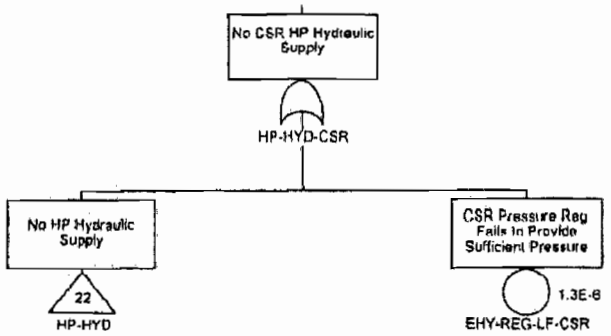

Confidential Treatment Requested by Transocean Holdings LLC

TRN-HCEC-00056472

No Hydraulic Supply From HP (99) Supply

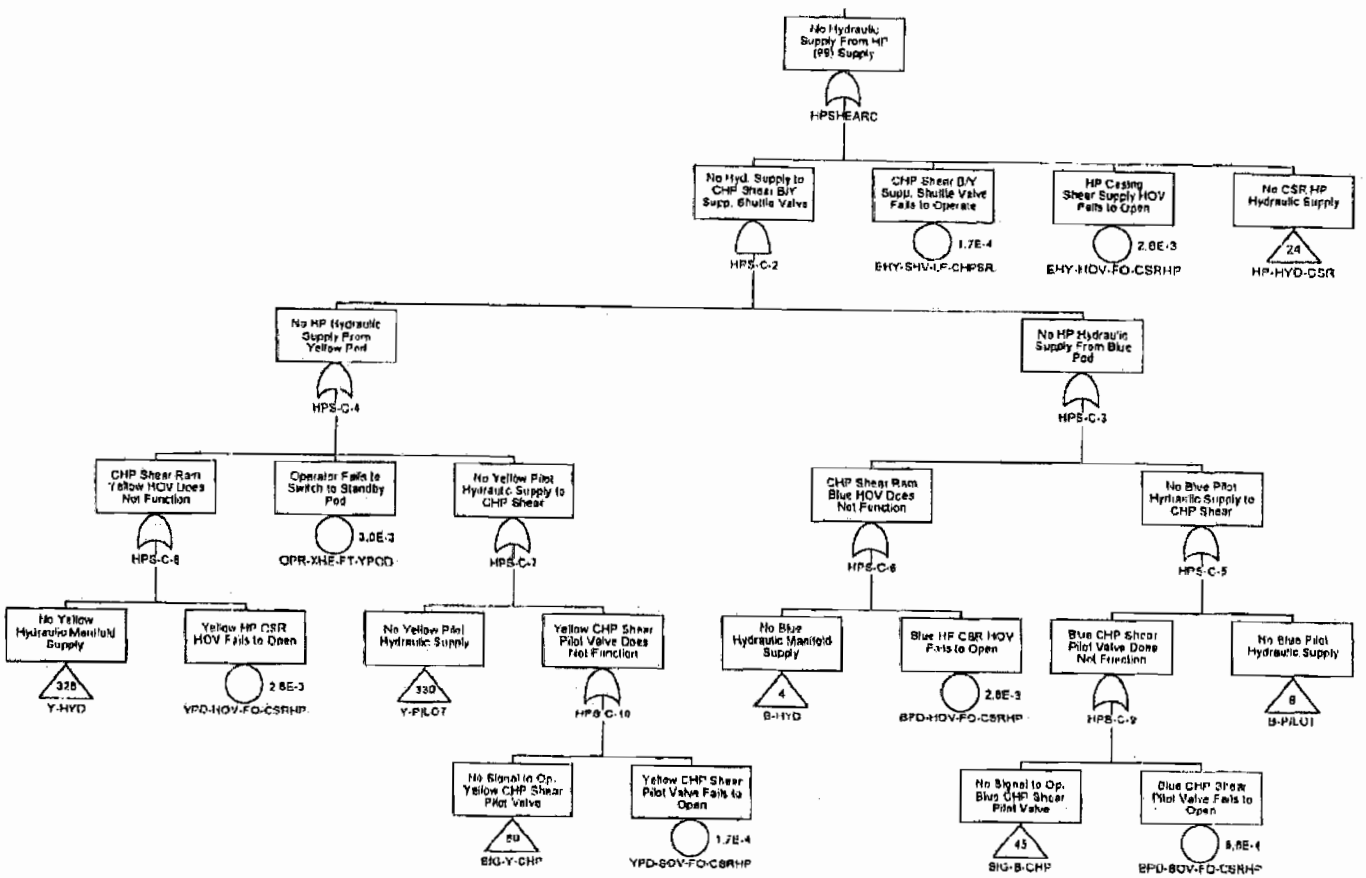

Confidential Treatment Requested by Transocean Holdings LLC

TRN-HCEC-00056473

No Hydraulic Supply From HP (103) Supply

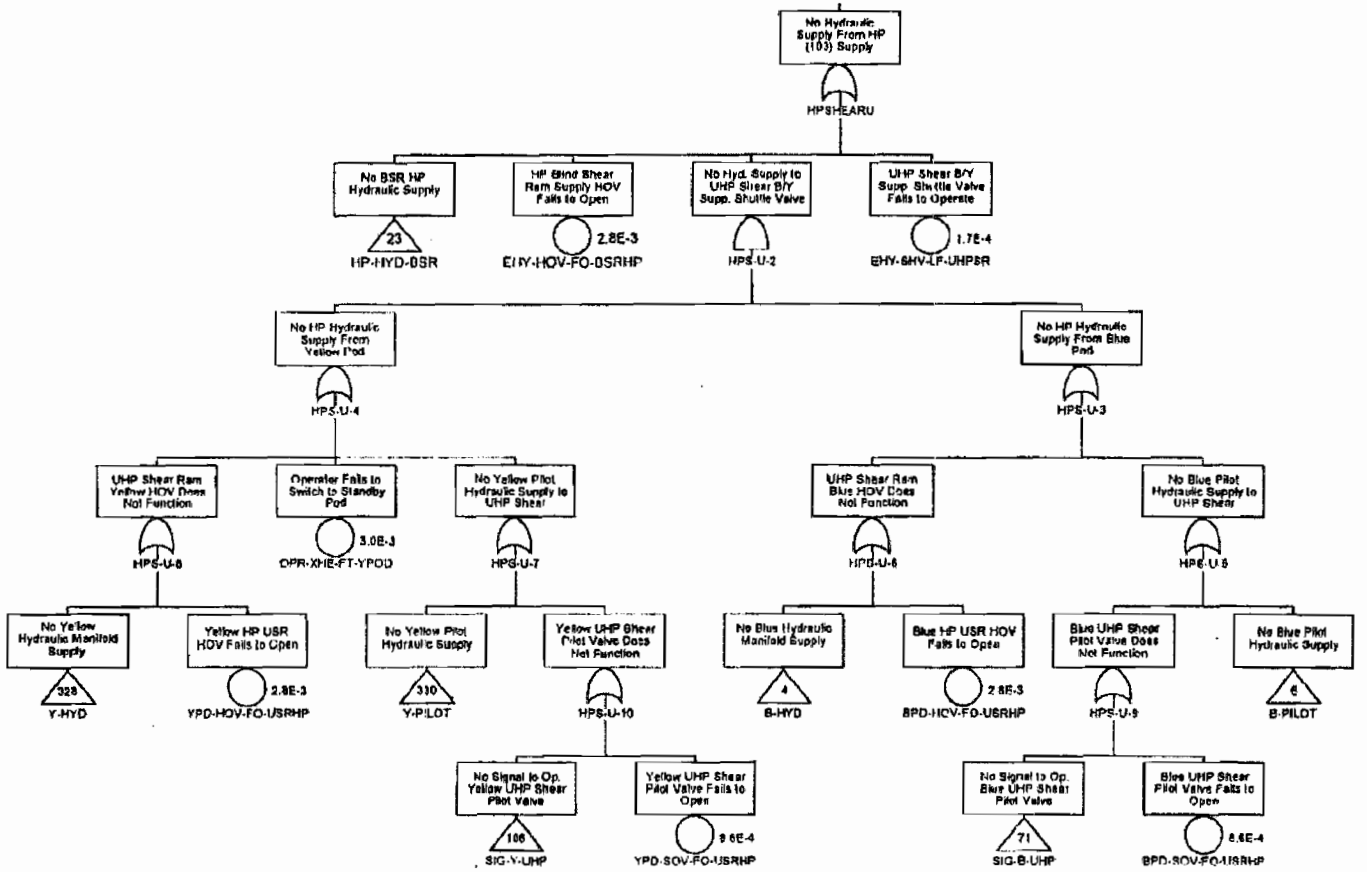

Confidential Treatment Requested by Transocean Holdings LLC

TRN-HCEC-00056474

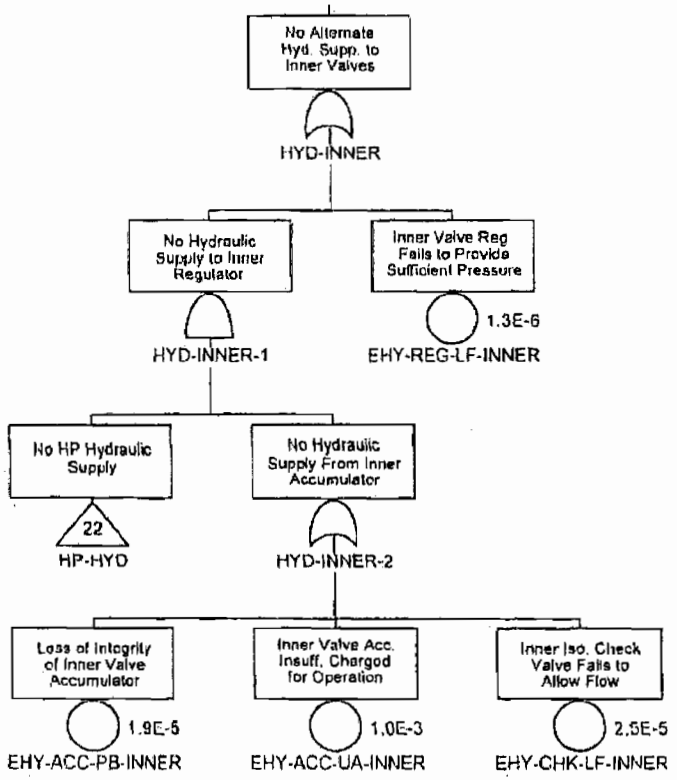

Confidential Treatment Requested by Transocean Holdings LLC

TRN-HCEC-00056475

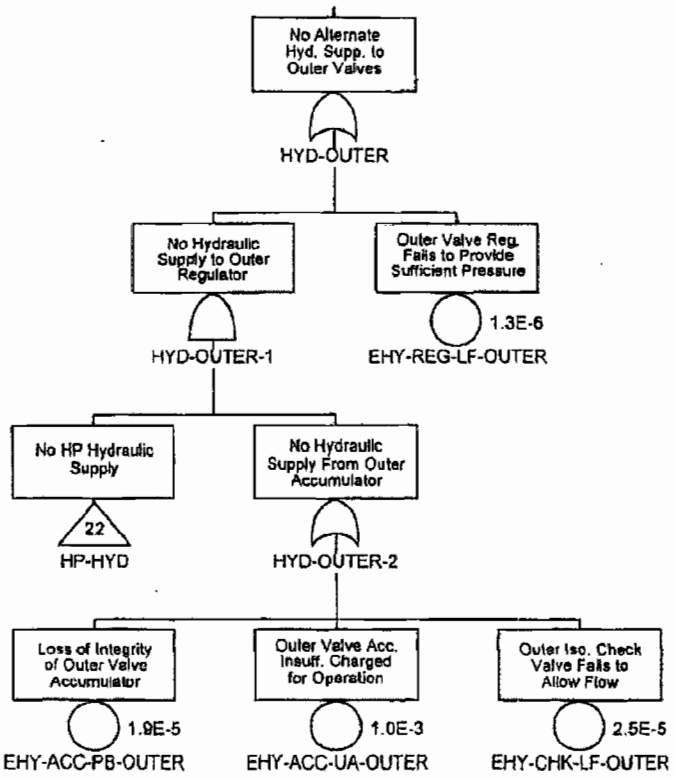

Confidential Treatment Requested by Transocean Holdings LLC

TRN-HCEC-00056476

No Hydraulic Supply to Lower Pipe Ram

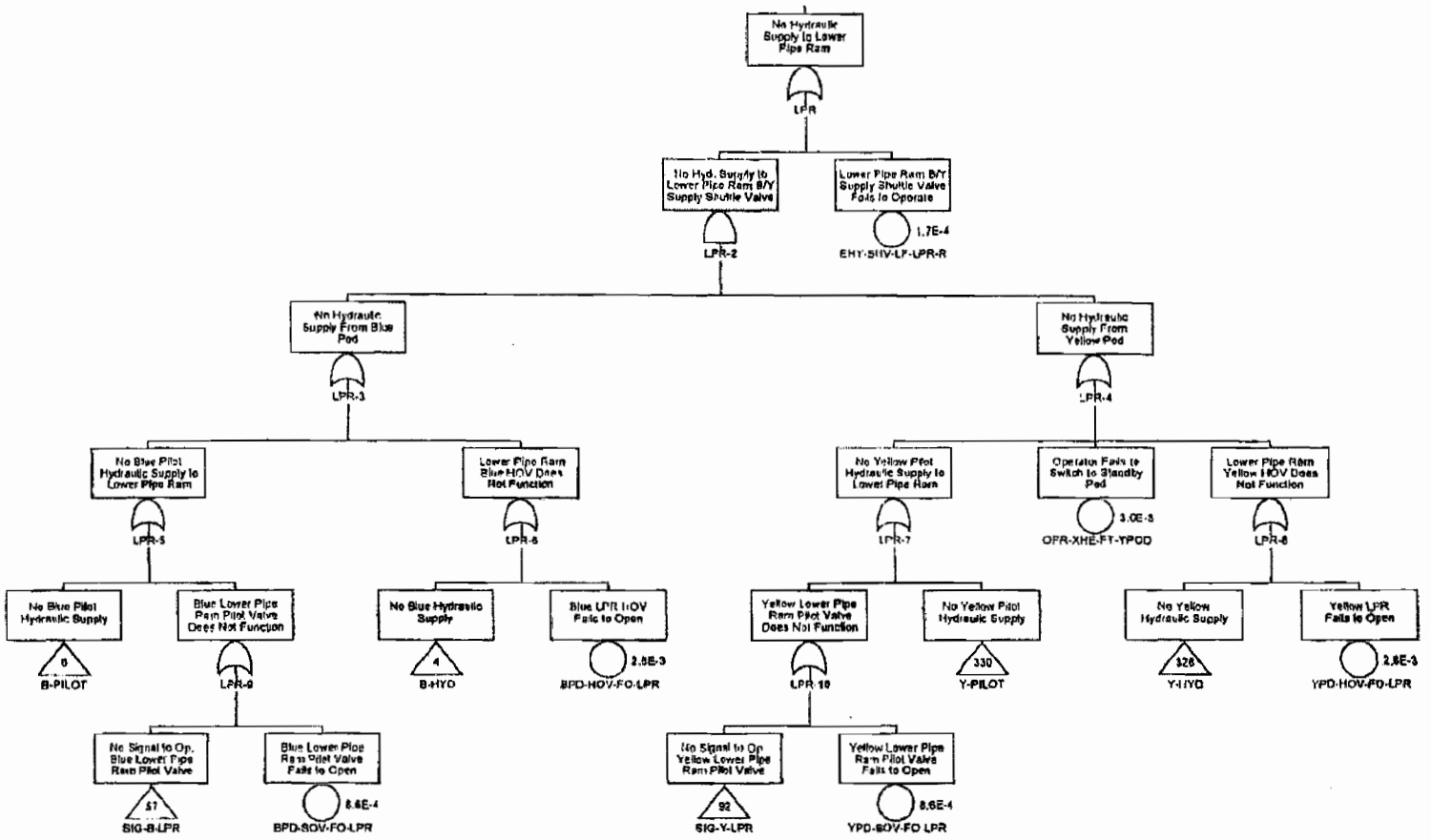

Confidential Treatment Requested by Transocean Holdings LLC

TRN-HCEC-00056477

No Hydraulic Supply to Middle Pipe Ram

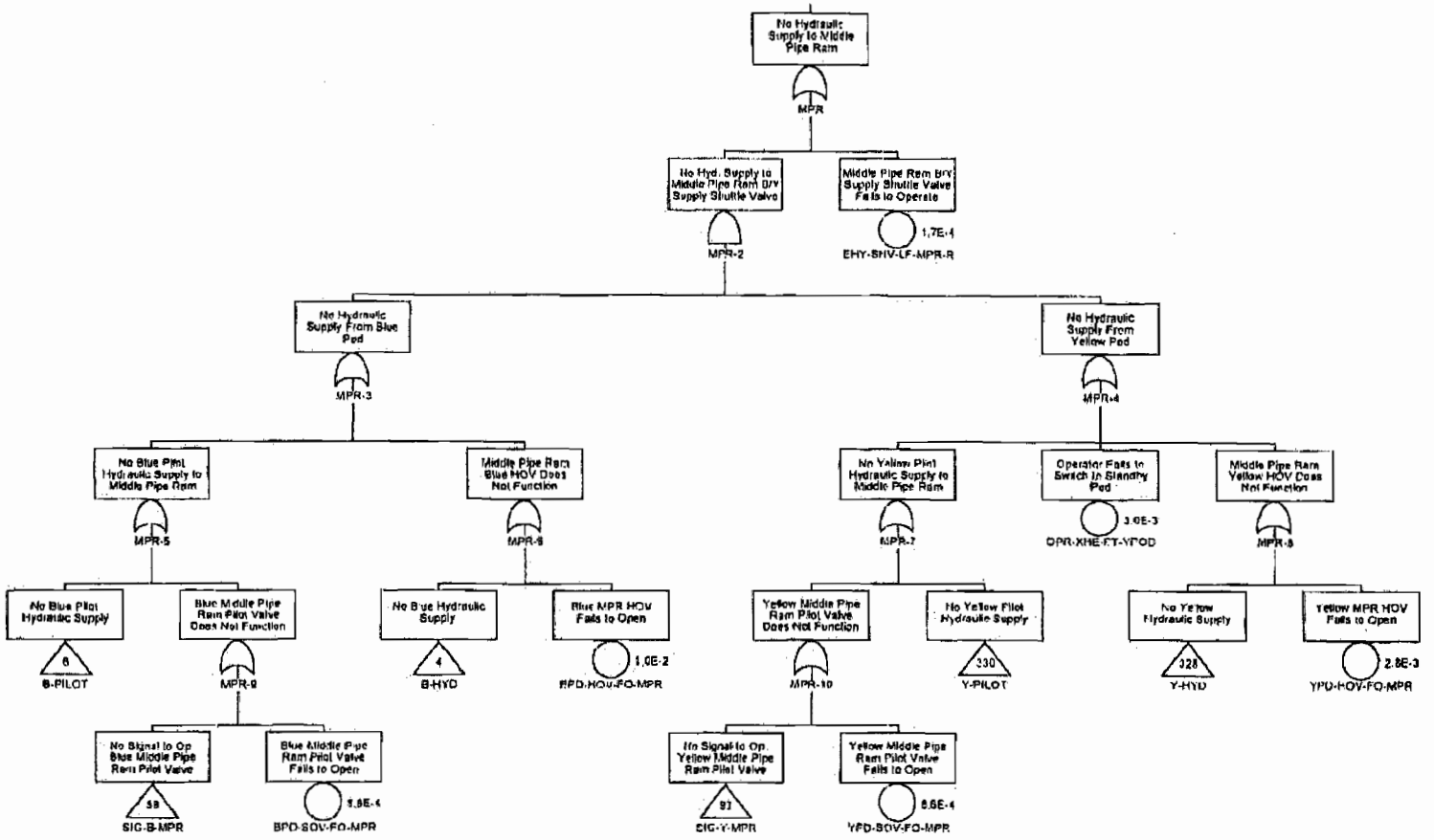

Confidential Treatment Requested by Transocean Holdings LLC

TRN-HCEC-00056478

Failure to Open LIC

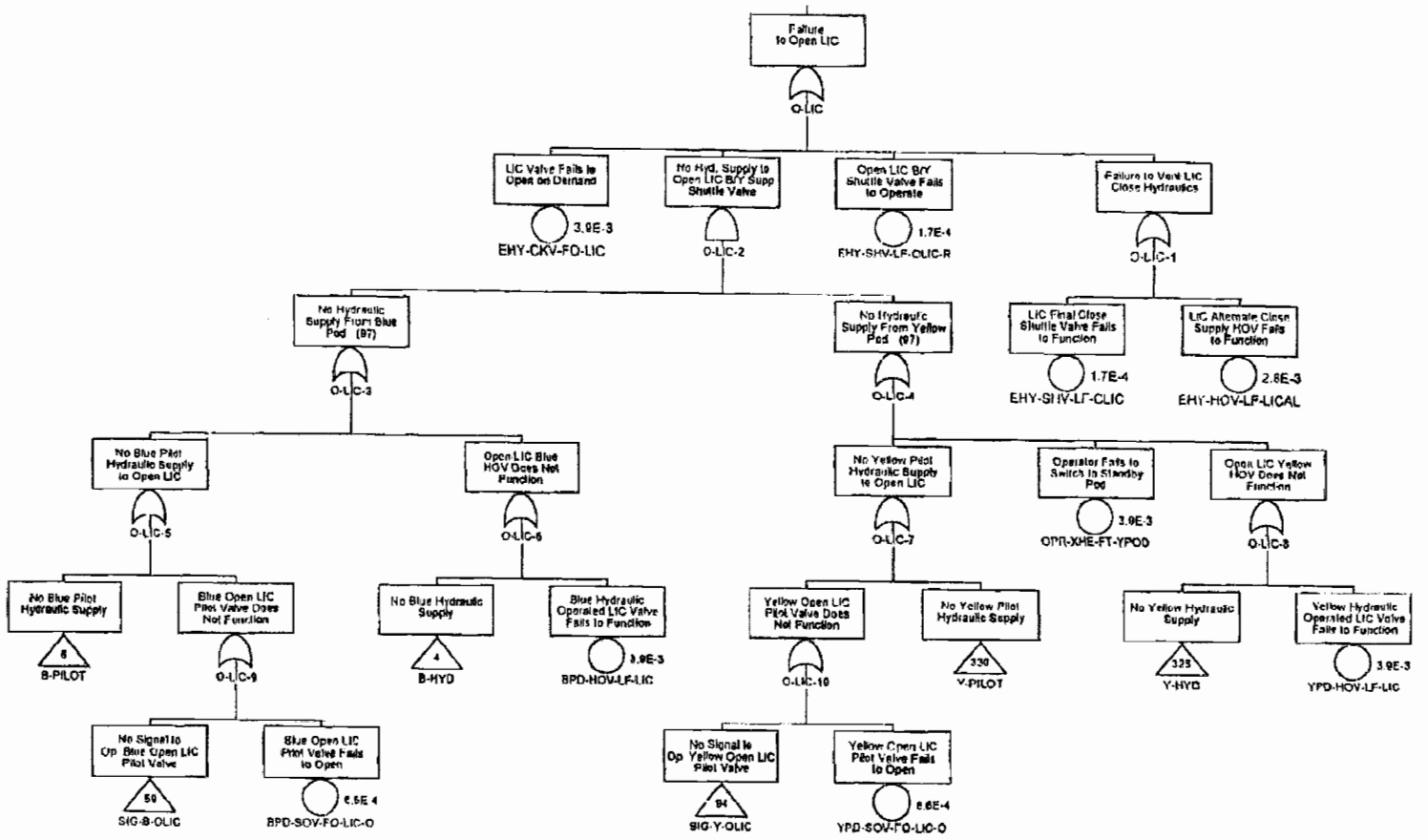

Confidential Treatment Requested by Transocean Holdings LLC

TRN-HCEC-00056479

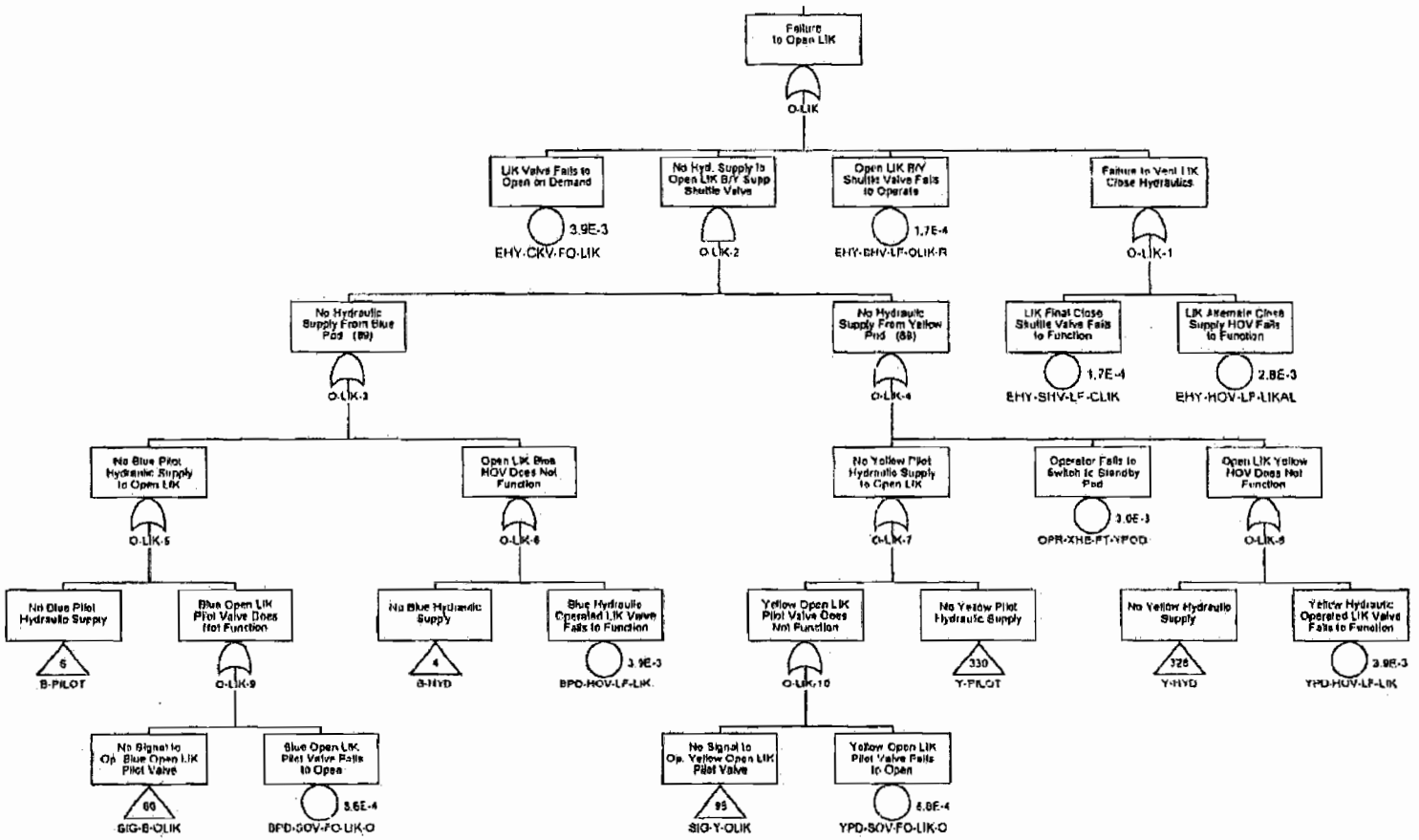

Confidential Treatment Requested by Transocean Holdings LLC

TRN-HCEC-00056480

Failure to Open LOC

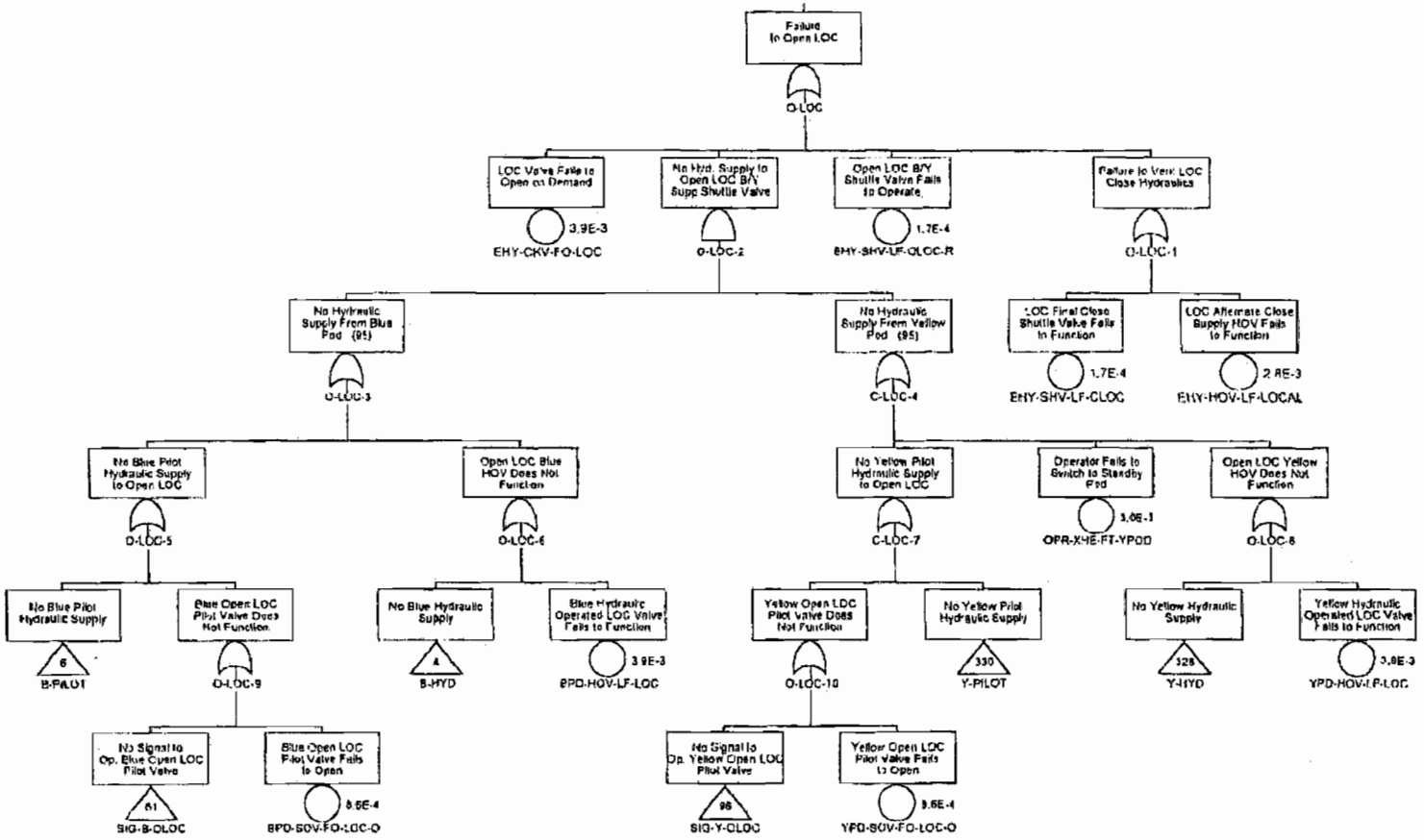

Confidential Treatment Requested by Transocean Holdings LLC

TRN-HCEC-00056481

Failure to Open LOK

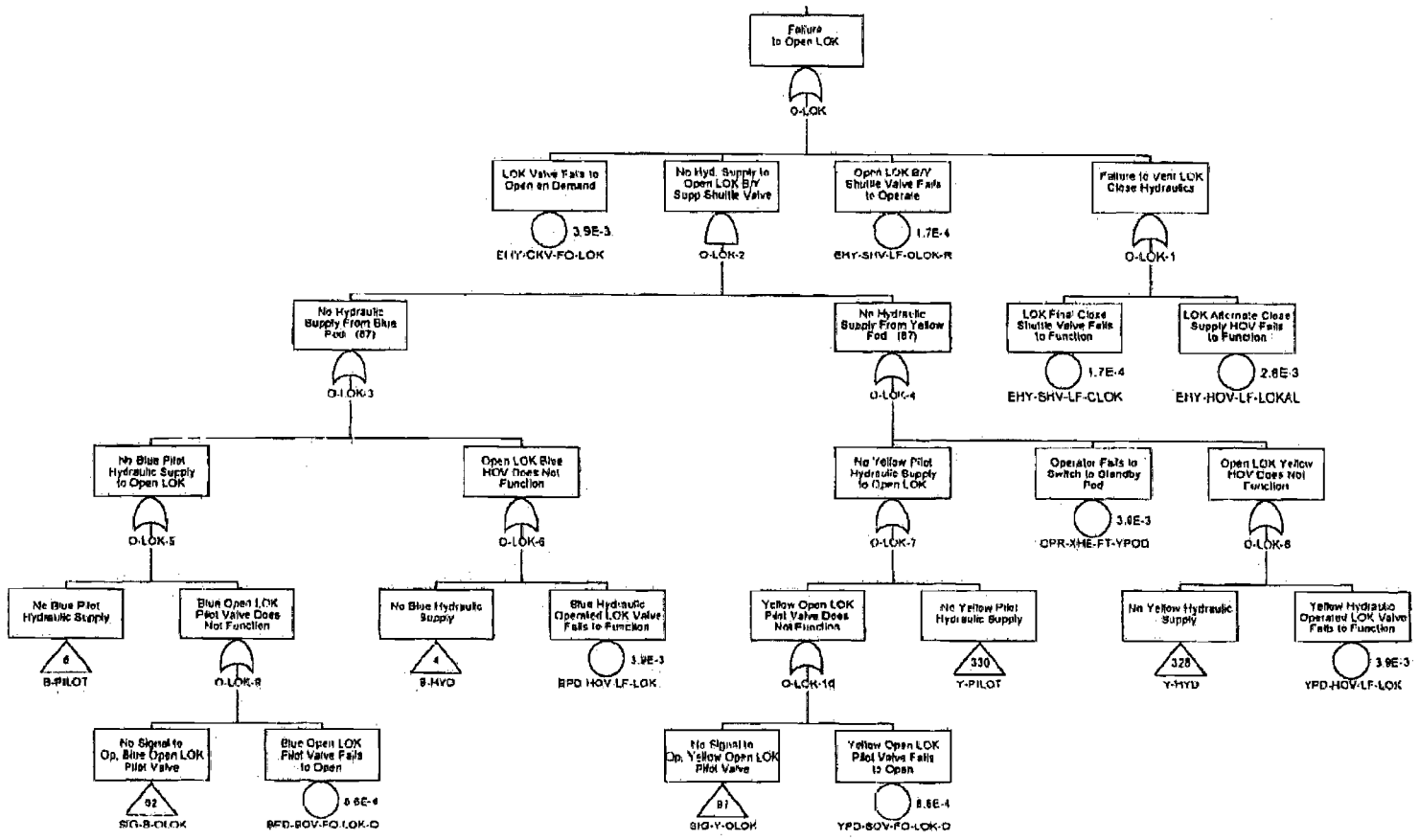

Confidential Treatment Requested by Transocean Holdings LLC

TRN-HCEC-00056482

Failure to Open UIC

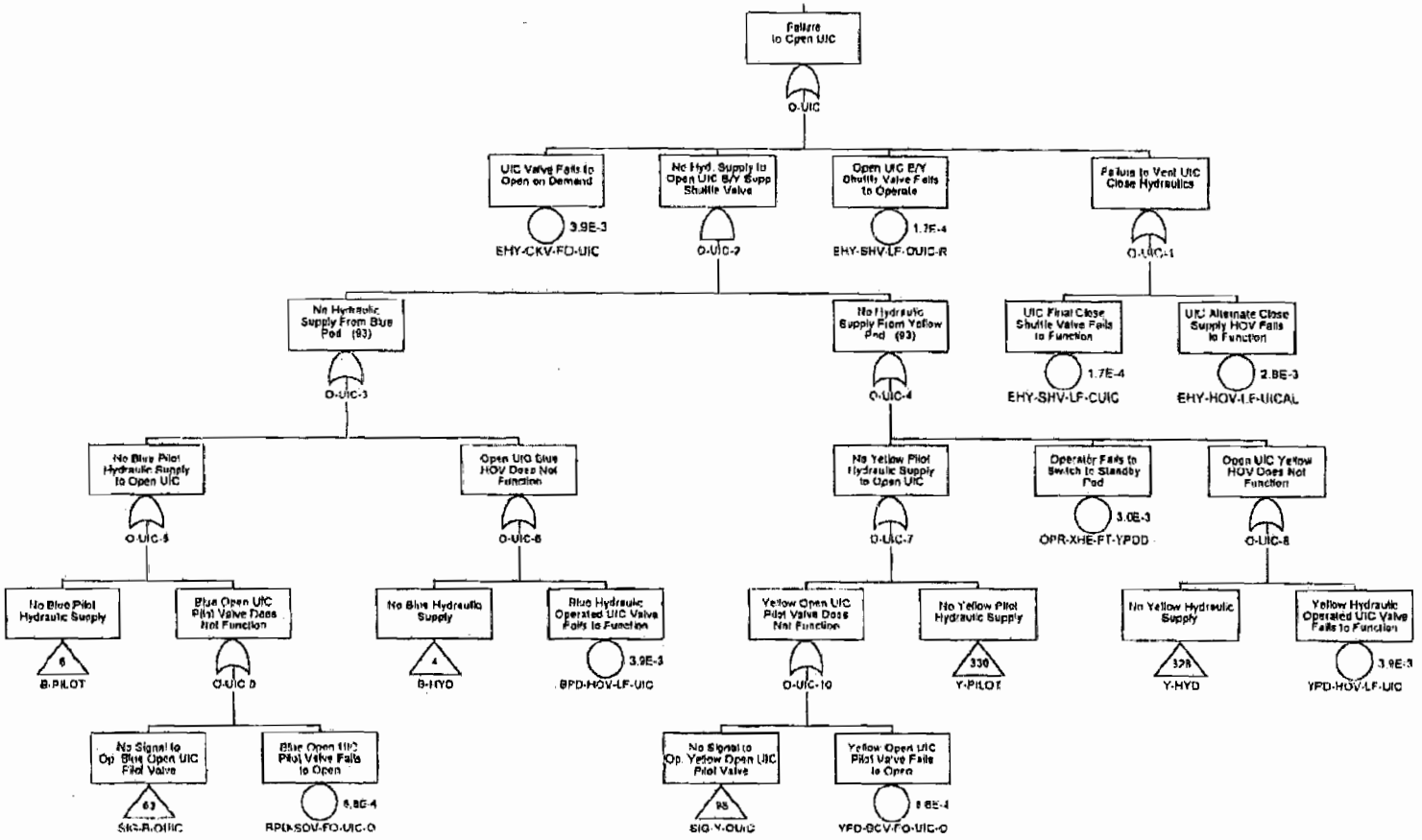

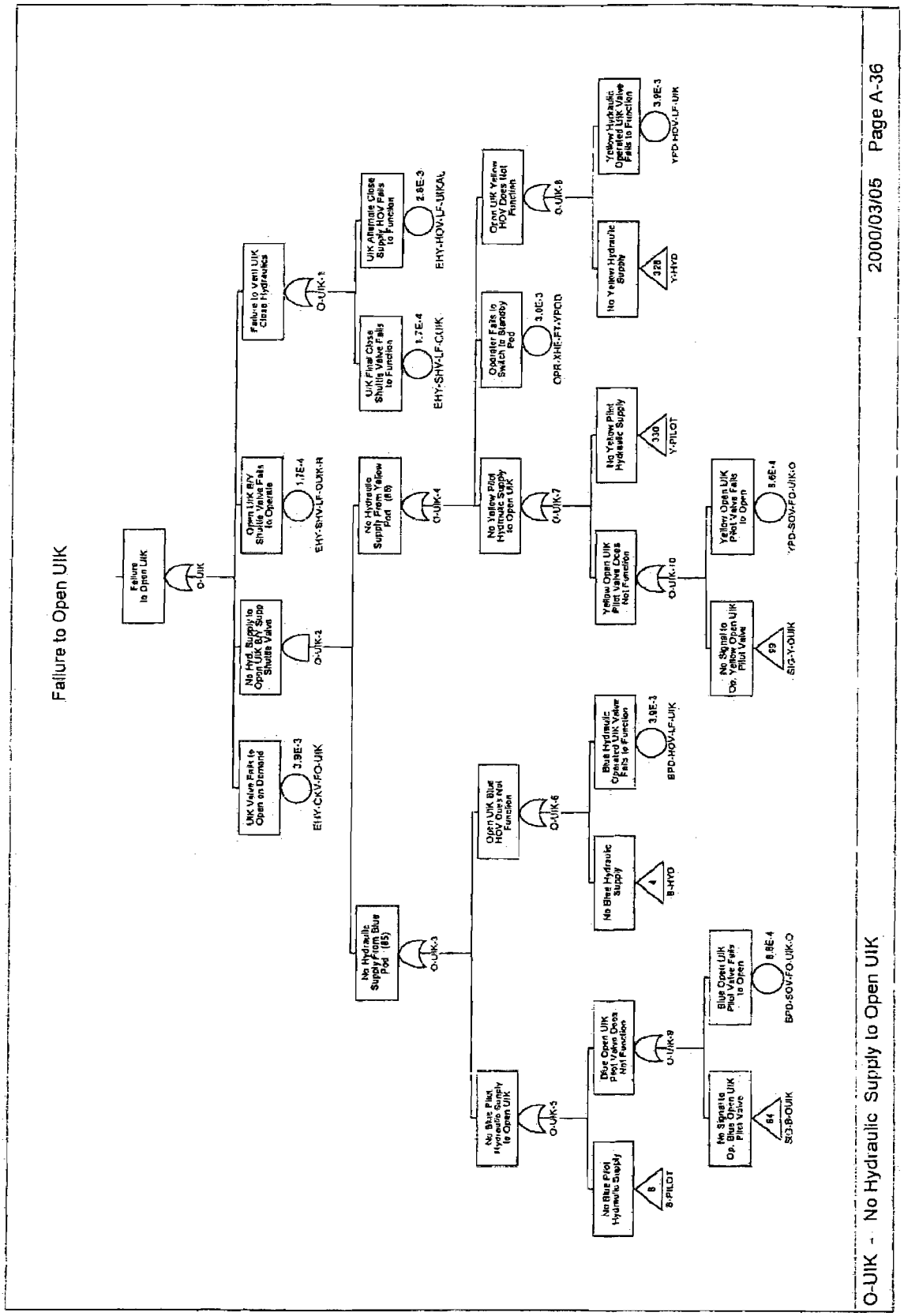
Failure to Open UIK
Failure to Open UIK
O-UIK
UIK Valve Fails to Open on Demand
3.9E-3
EHY-CKV-FO-UIK
No Hyd. Supply to Open UIK B/F Supp Shuttle Valve
O-UIK-2
Open UIK B/F Shuttle Valve Fails to Operate
1.7E-4
EHY-SHV-LF-OUIK-R
Failure to Vent UIK Close Hydraulics
O-UIK-1
UIK Alternate Close Supply HOV Fails to Function
2.8E-3
EHY-HOV-LF-UIKAL
UIK Final Close Shuttle Valve Fails to Function
1.7E-4
EHY-SHV-LF-CUIK
No Hydraulic Supply From Yellow Pod (B5)
O-UIK-4
Operator Fails to Switch to Specific Pod
3.0E-3
OPR-XHE-FT-YPOD
Open UIK Yellow HOV Does Not Function
O-UIK-8
No Yellow Pilot Hydraulic Supply to Open UIK
O-UIK-7
No Yellow Pilot Hydraulic Supply
330
Y-PILOT
No Yellow Hydraulic Supply
328
Y-HYD
Yellow Hydraulic Operated UIK Valve Fails to Function
3.9E-3
YPD-HOV-LF-UIK
No Hydraulic Supply From Blue Pod (B5)
O-UIK-3
Open UIK Blue HOV Does Not Function
O-UIK-6
Blue Hydraulic Operated UIK Valve Fails to Function
3.9E-3
BPD-HOV-LF-UIK
Yellow Open UIK Pilot Valve Does Not Function
O-UIK-10
Yellow Open UIK Pilot Valve Fails to Open
8.6E-4
YPD-SOV-FO-UIK-O
No Signal to Op. Yellow Open UIK Pilot Valve
69
SIG-Y-OUIK
No Blue Pilot Hydraulic Supply to Open UIK
O-UIK-5
No Blue Hydraulic Supply
4
B-HYD
Blue Open UIK Pilot Valve Does Not Function
O-UIK-9
Blue Open UIK Pilot Valve Fails to Open
8.6E-4
BPD-SOV-FO-UIK-O
No Signal to Op. Blue Open UIK Pilot Valve
64
SIG-B-OUIK
No Blue Pilot Hydraulic Supply
8
B-PILOT
O-UIK - No Hydraulic Supply to Open UIK
2000/03/05 Page A-36

Confidential Treatment Requested by Transocean Holdings LLC

TRN-HCEC-00056484

Failure to Open UOC

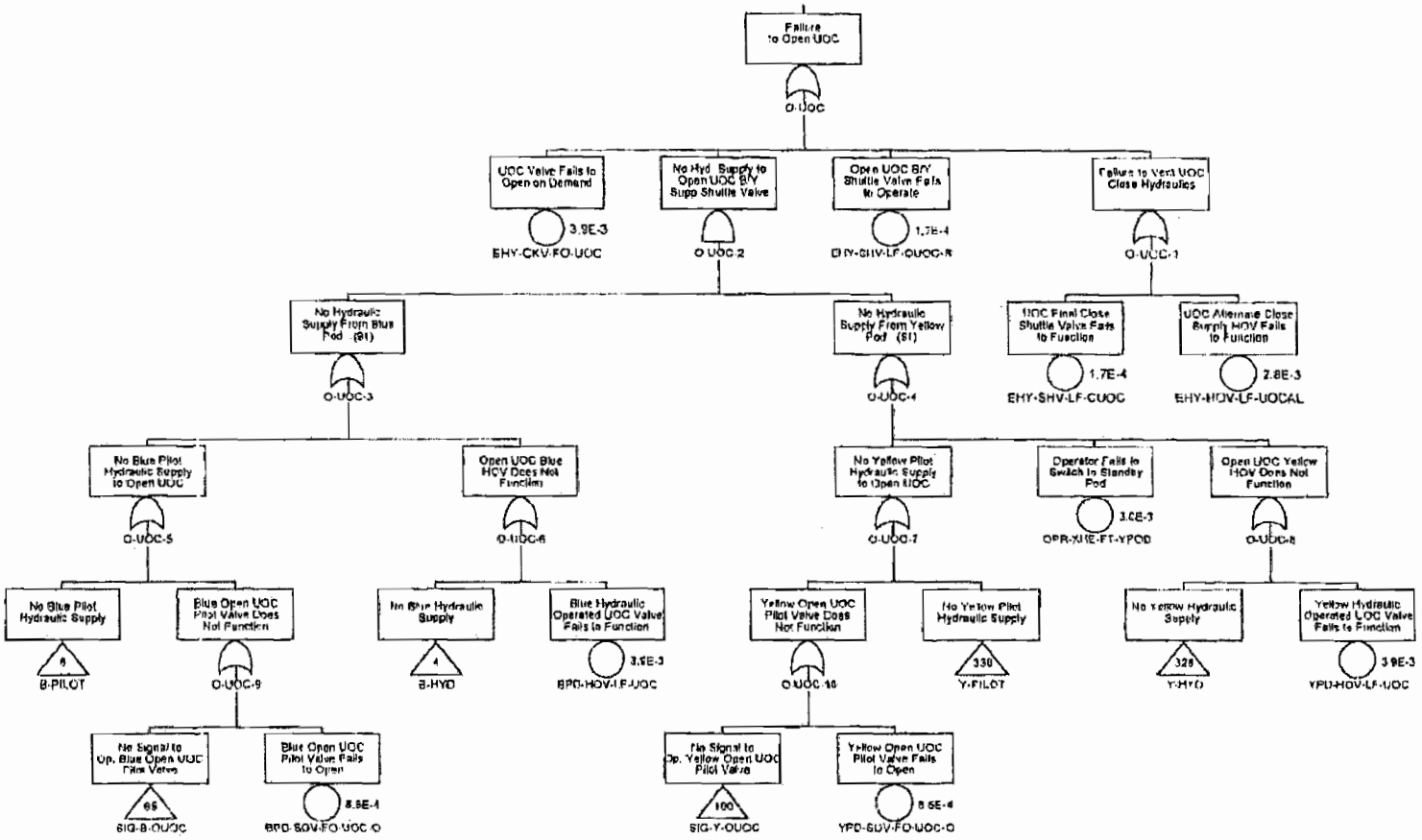

Confidential Treatment Requested by Transocean Holdings LLC

TRN-HCEC-00056485

Failure to Open UOK

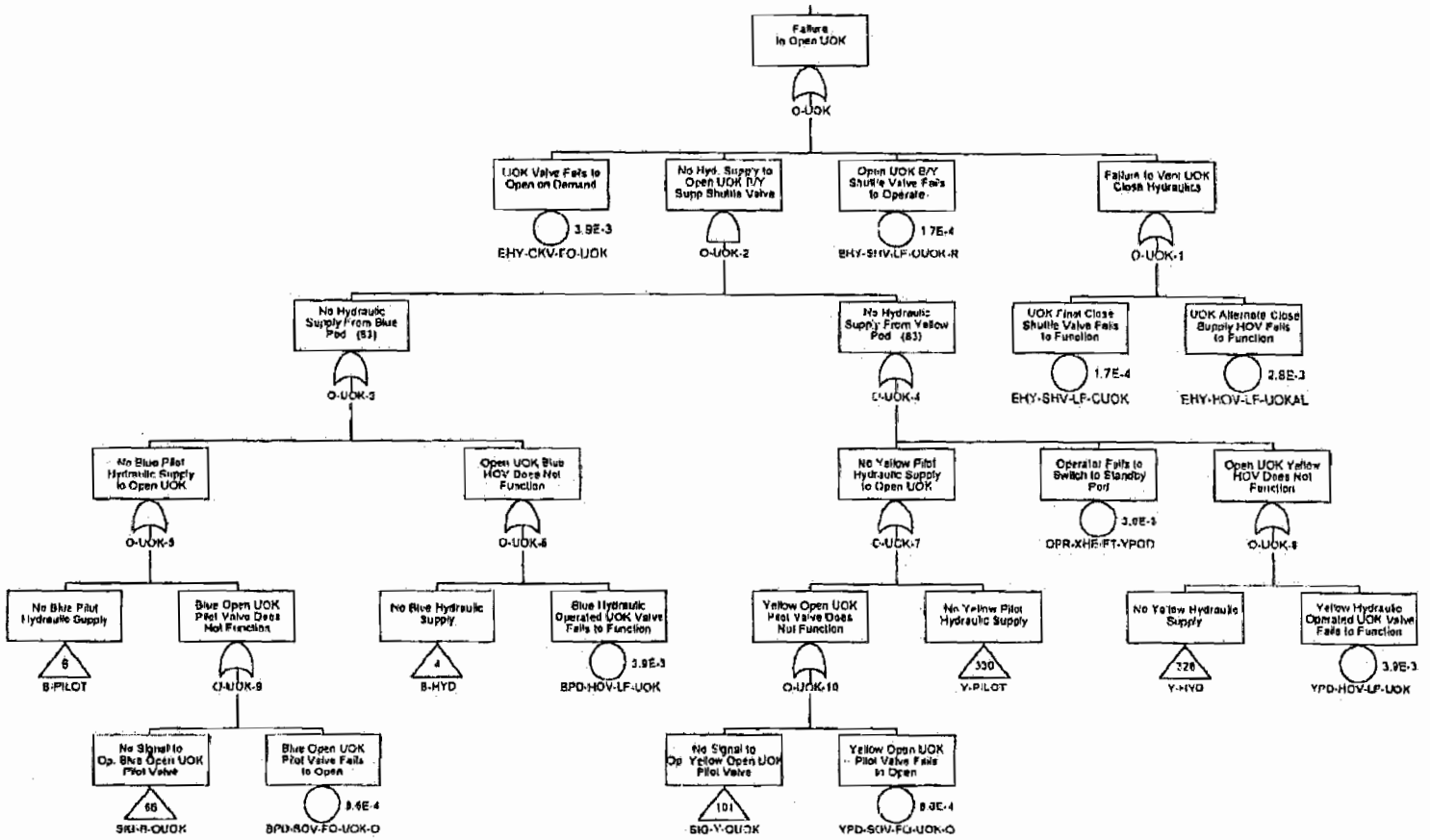

Confidential Treatment Requested by Transocean Holdings LLC

TRN-HCEC-00056486

No Hydraulic Supply to LMRP Primary Disconnect

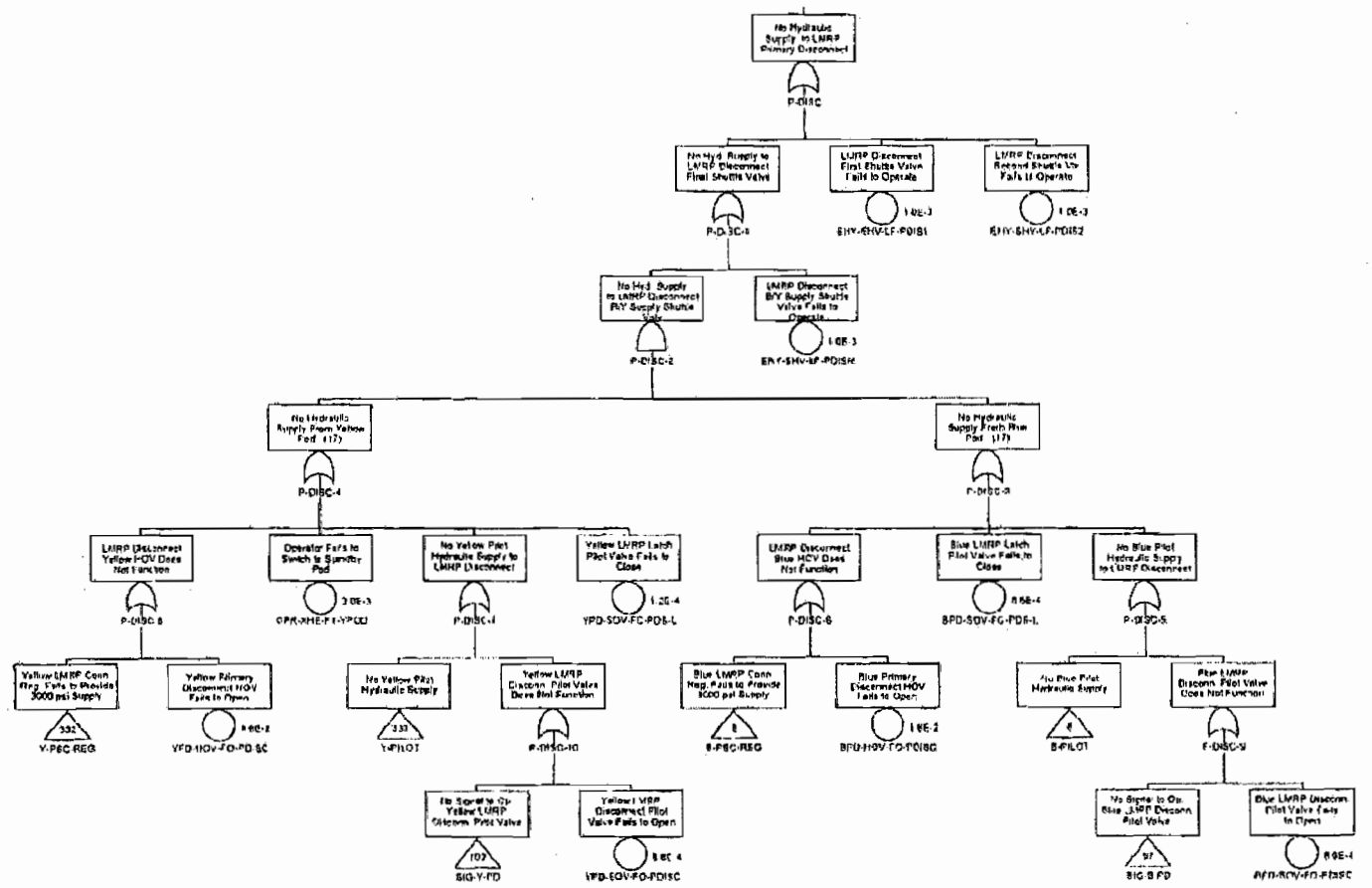

Confidential Treatment Requested by Transocean Holdings LLC

TRN-HCEC-00056487

No Hydraulic Supply From Rigid Conduit

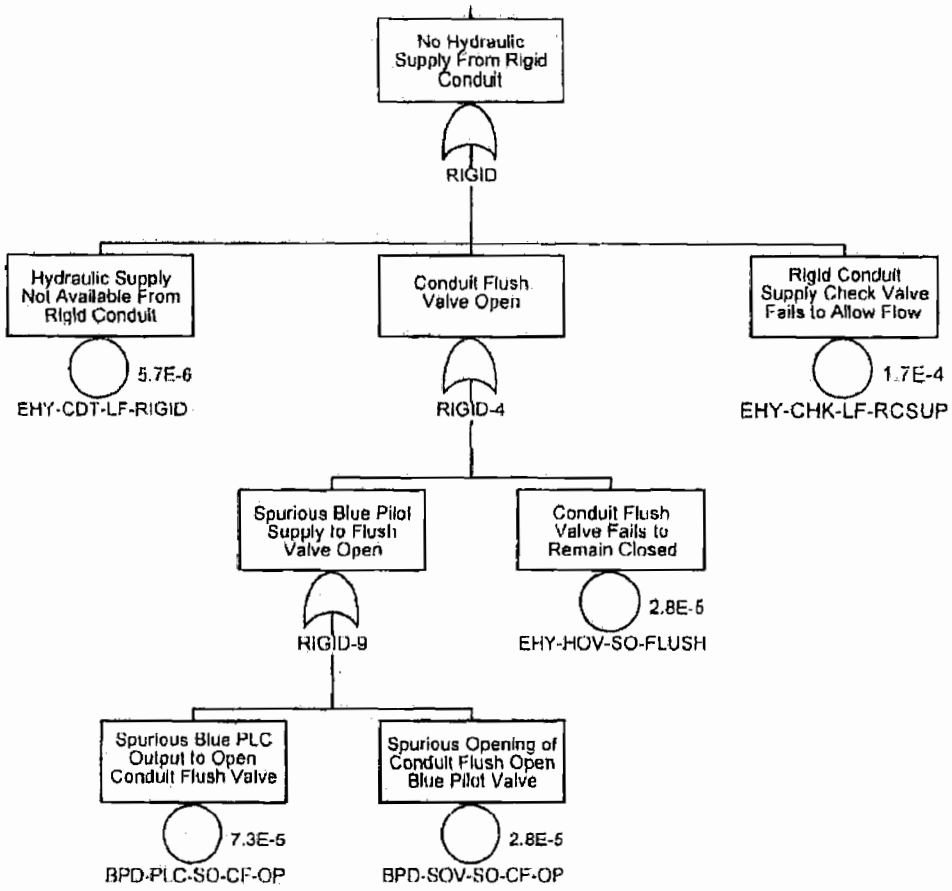

Confidential Treatment Requested by Transocean Holdings LLC

TRN-HCEC-00056488

No Hydraulic Supply to LMRP Secondary Disconnect

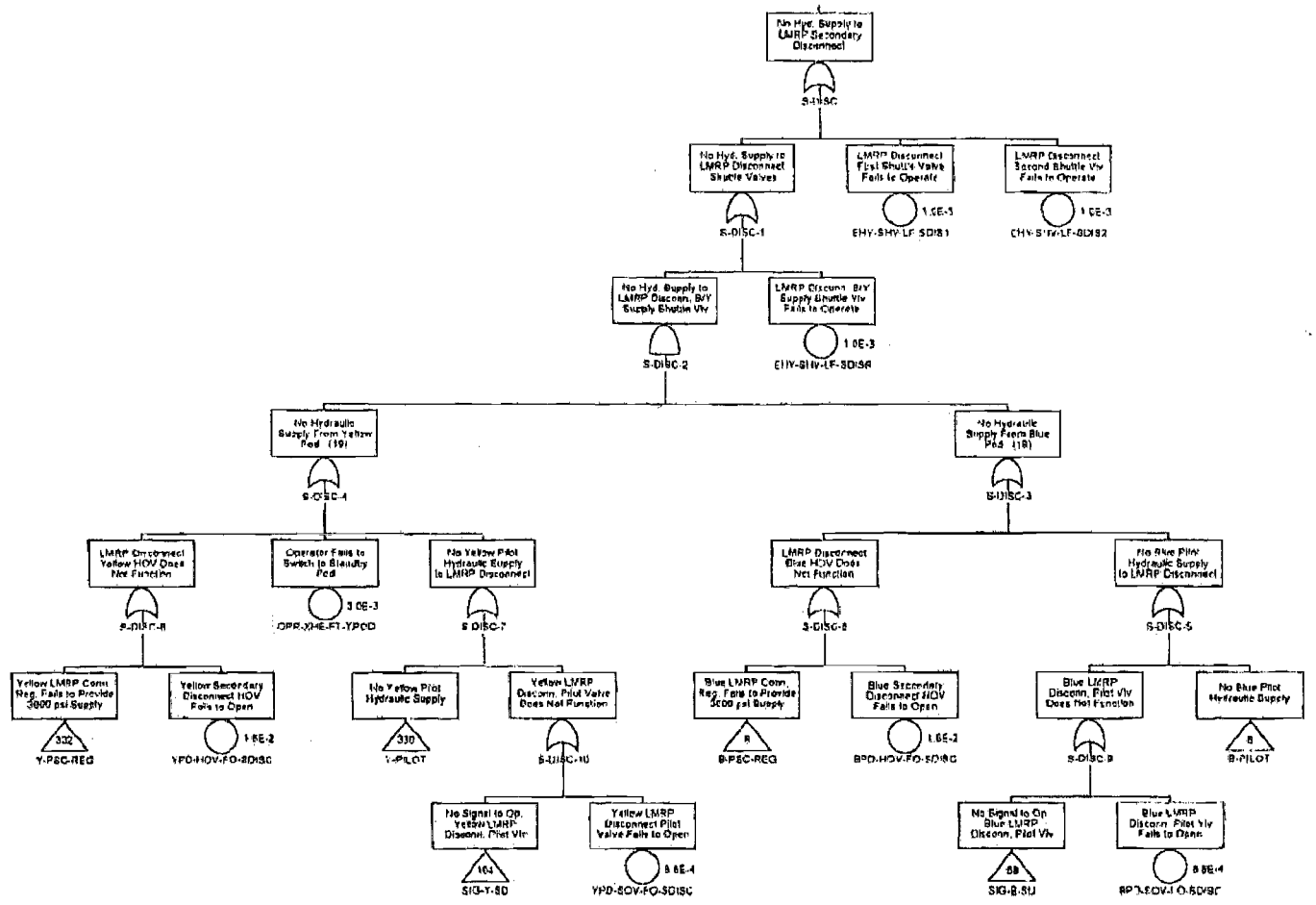

Confidential Treatment Requested by Transocean Holdings LLC

TRN-HCEC-00056489

Shear Function Fails

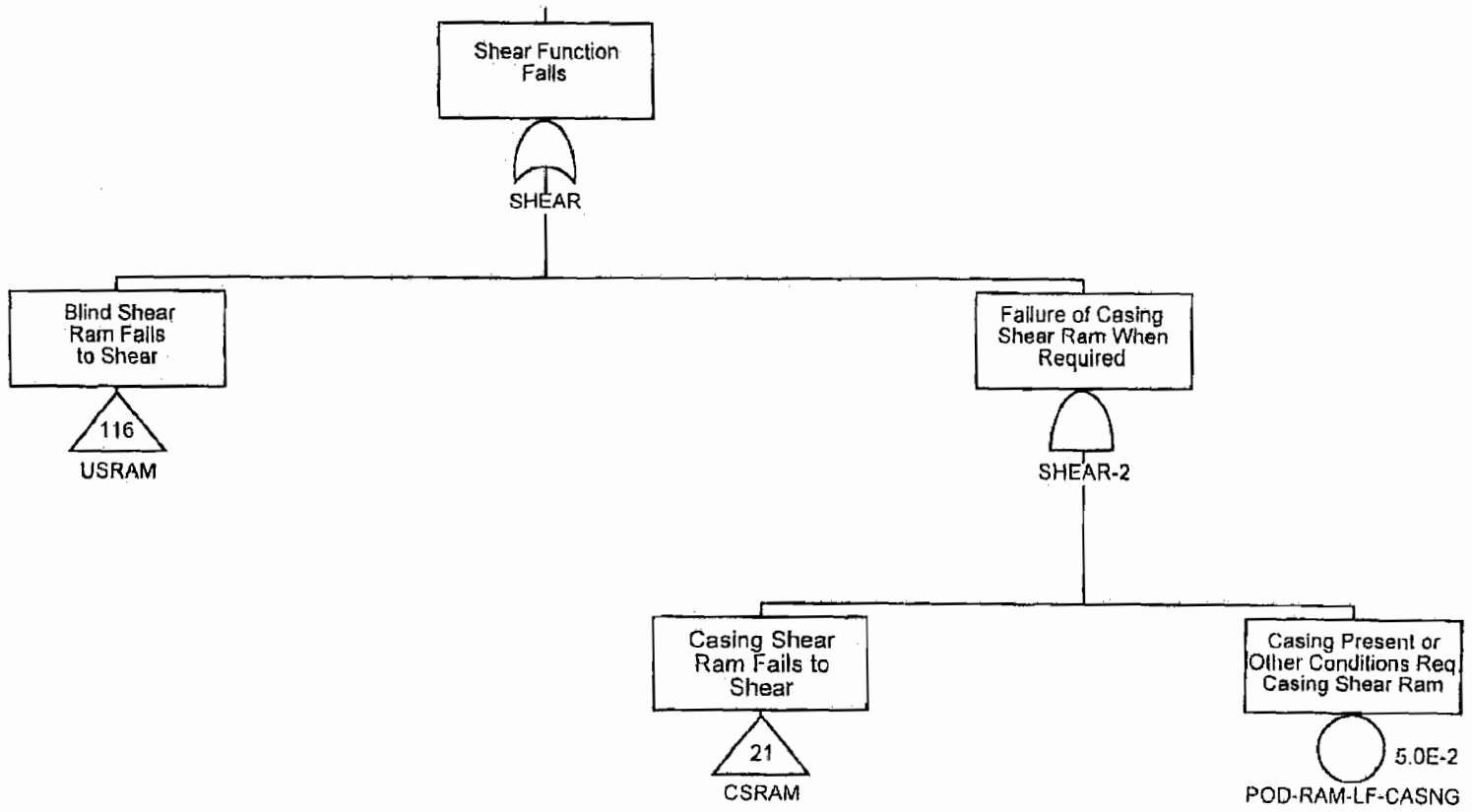

Confidential Treatment Requested by Transocean Holdings LLC

TRN-HCEC-00056490

No Blue Signal to Open Blue Conduit Supply

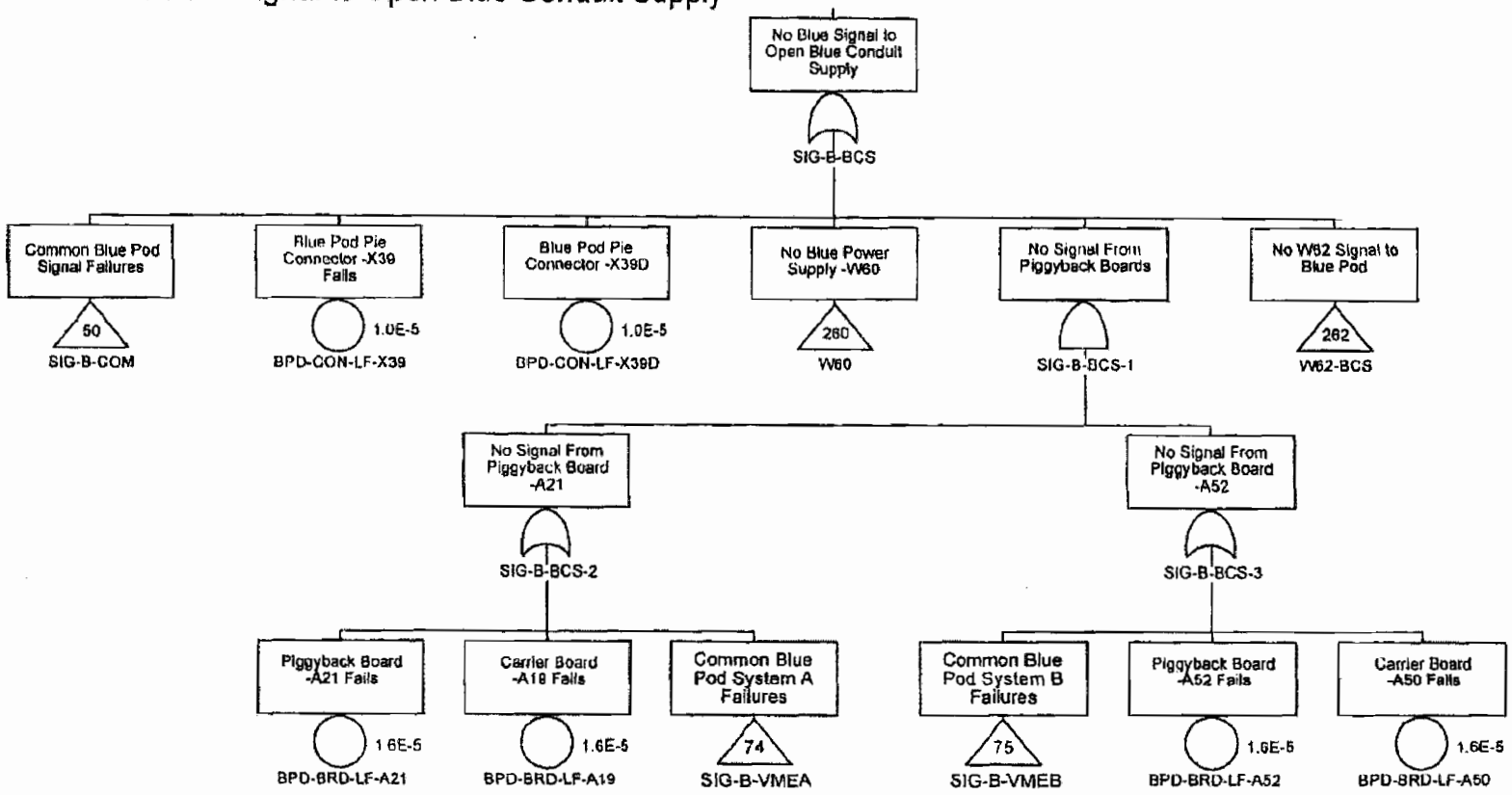

Confidential Treatment Requested by Transocean Holdings LLC

TRN-HCEC-00056491

No Blue Signal to Open Blue Hot Line Supply

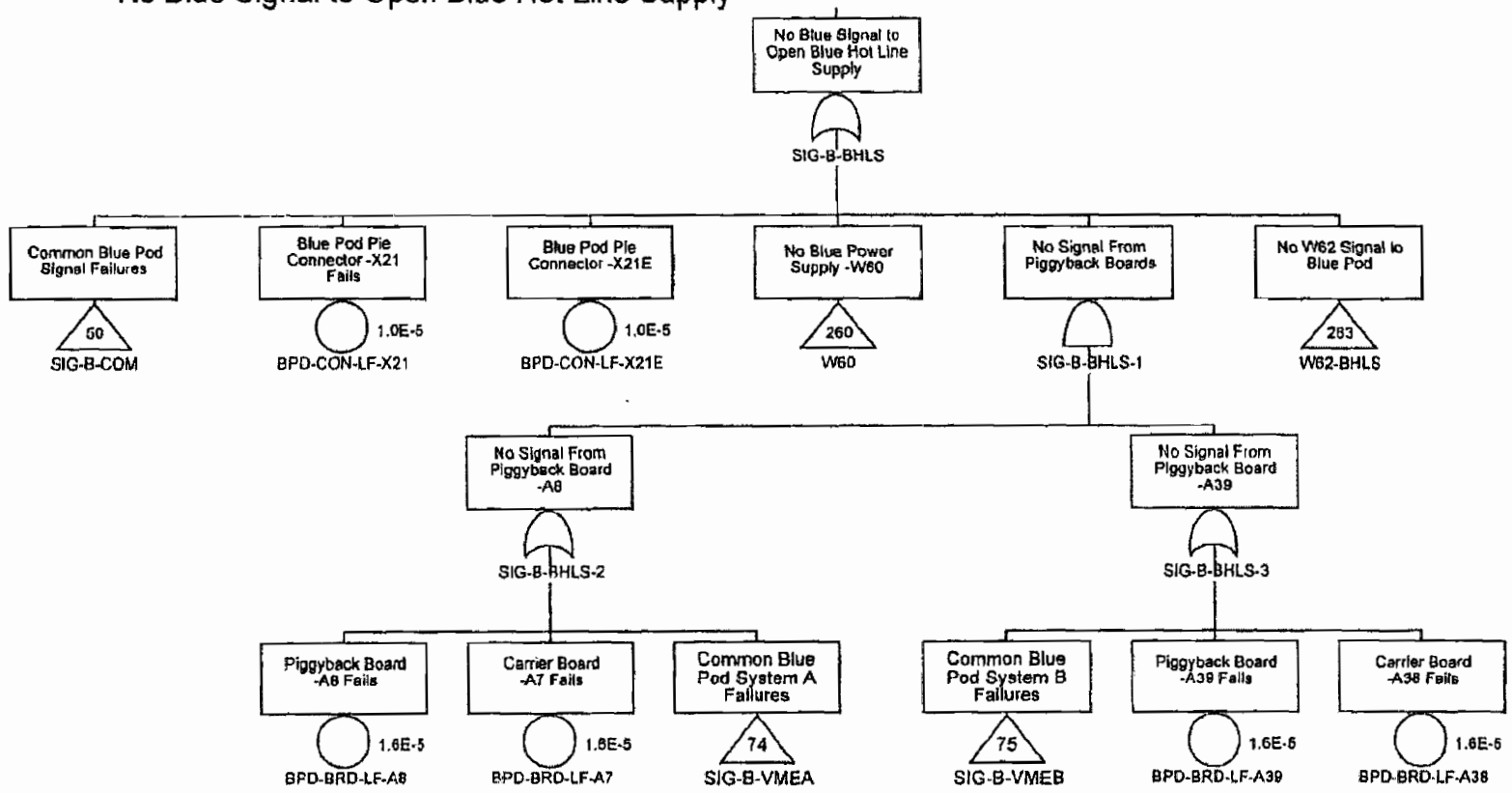

Confidential Treatment Requested by Transocean Holdings LLC

TRN-HCEC-00056492

No Blue Signal to Close Casing Shear Ram - High Pressure

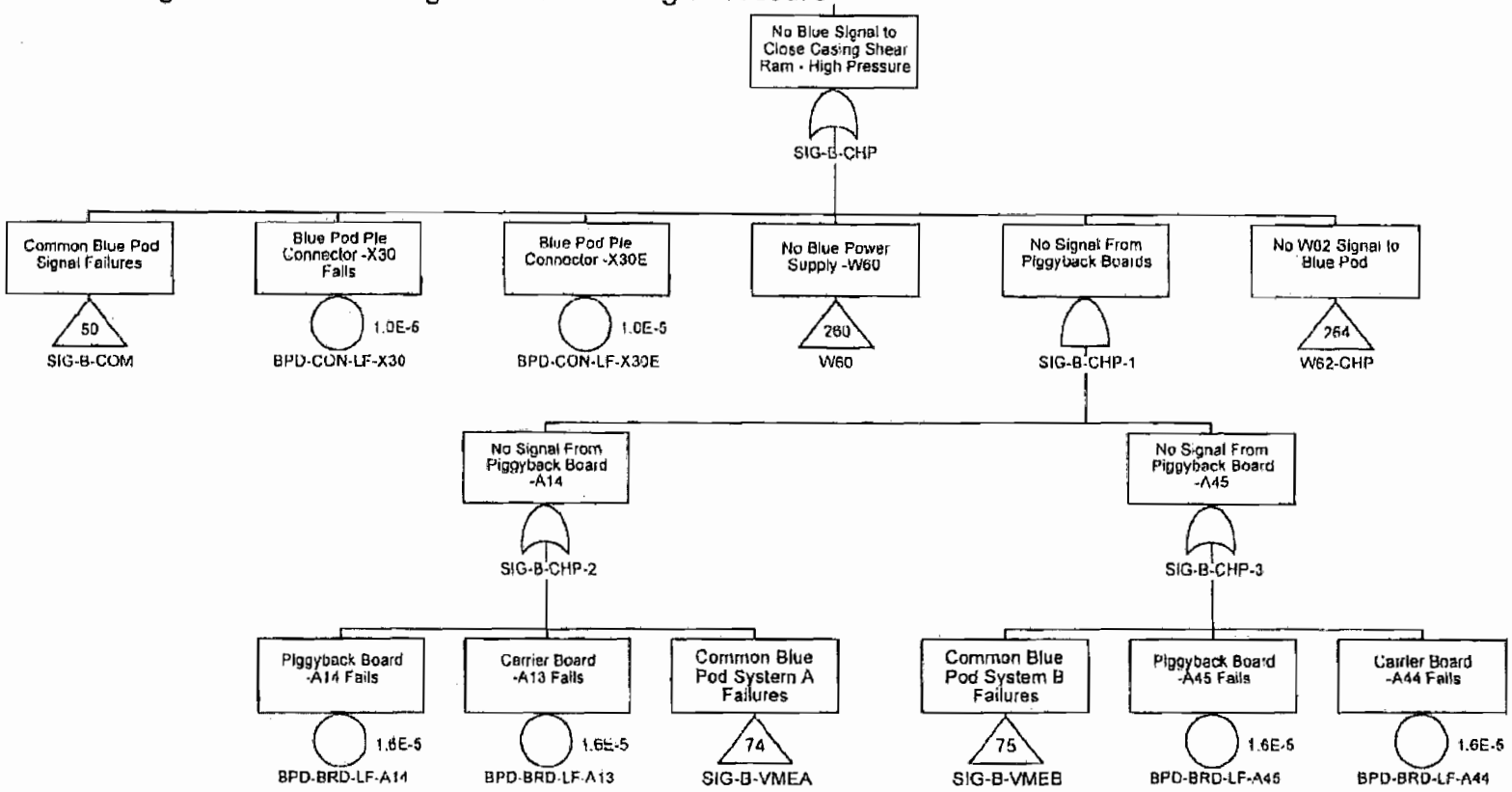

Confidential Treatment Requested by Transocean Holdings LLC

TRN-HCEC-00056493

No Blue Signal to Close LIC

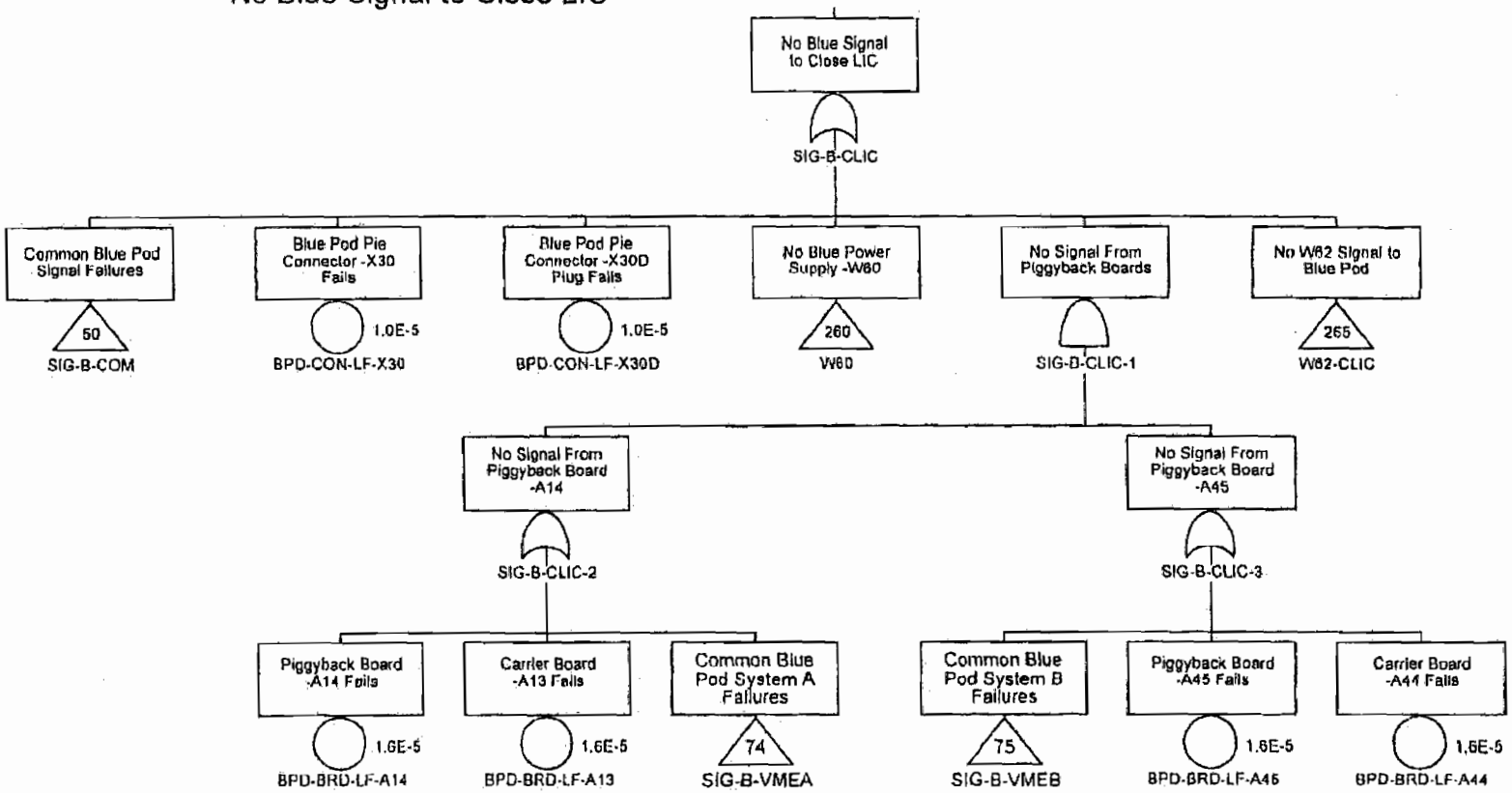

Confidential Treatment Requested by Transocean Holdings LLC

TRN-HCEC-00056494

No Blue Signal to Close Lower Inner Kill Valve

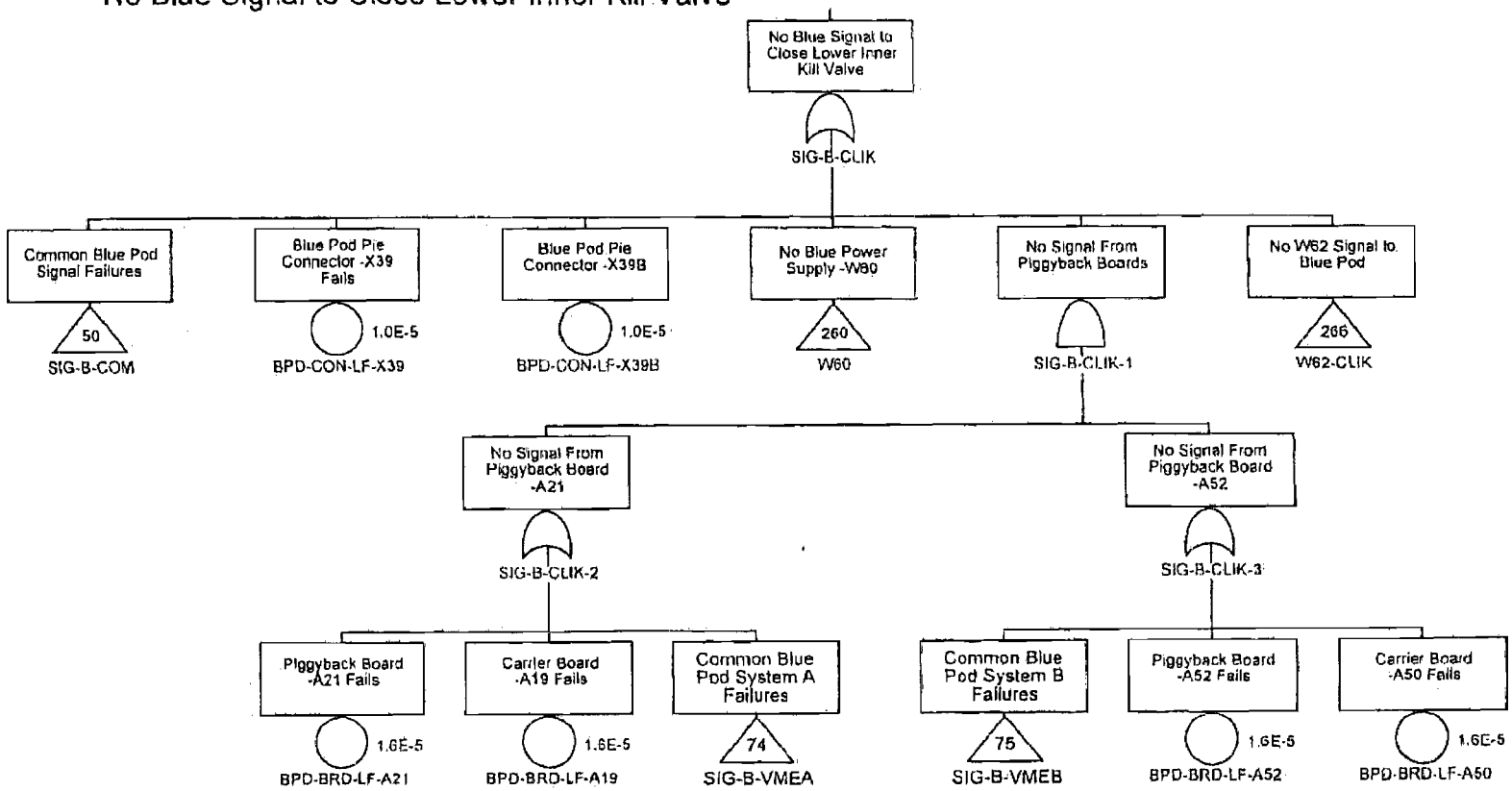

Confidential Treatment Requested by Transocean Holdings LLC

TRN-HCEC-00056495

No Blue Signal to Close Lower Outer Choke Valve

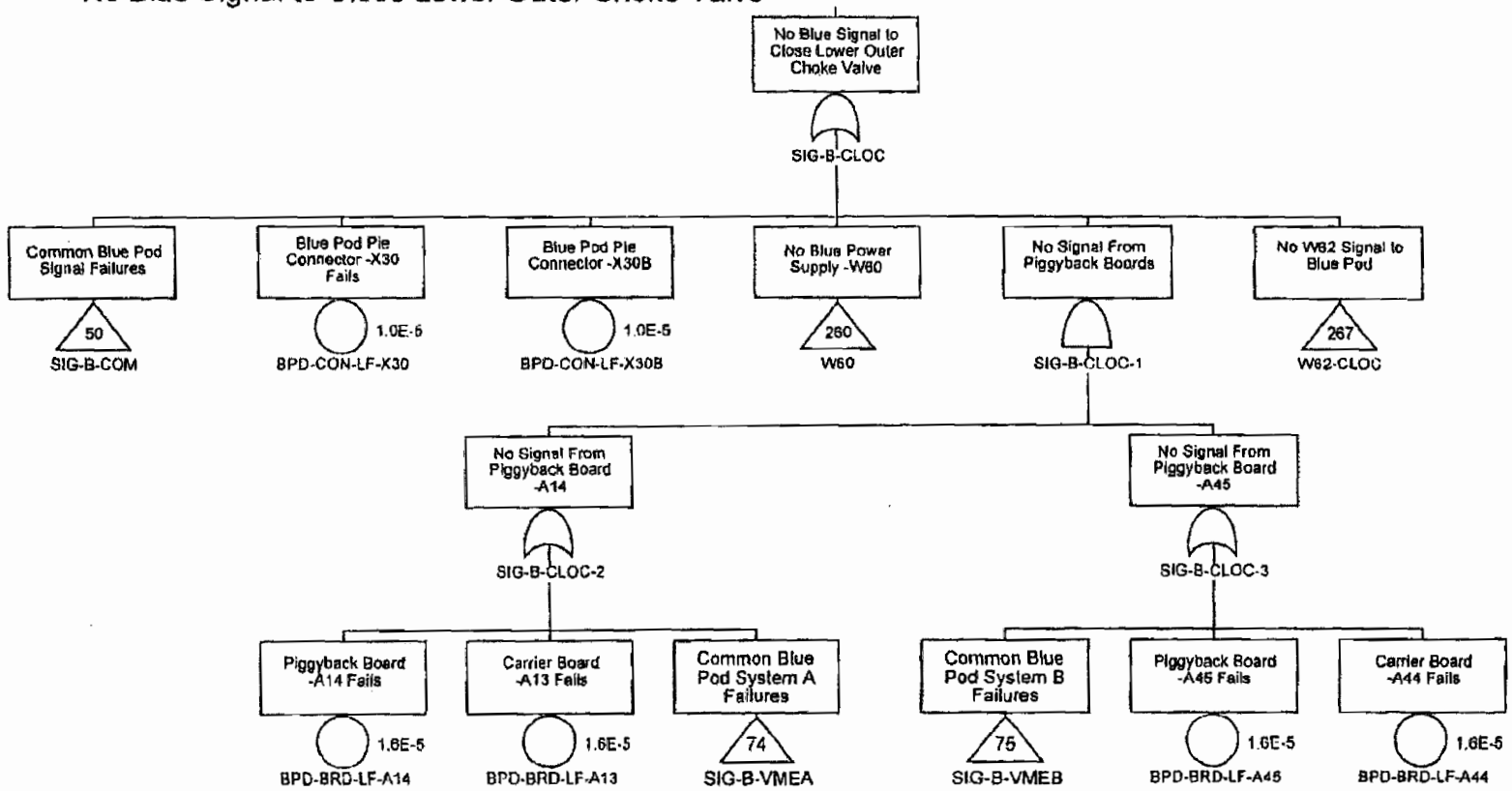

Confidential Treatment Requested by Transocean Holdings LLC

TRN-HCEC-00056496

No Blue Signal to Close Lower Outer Kill Valve

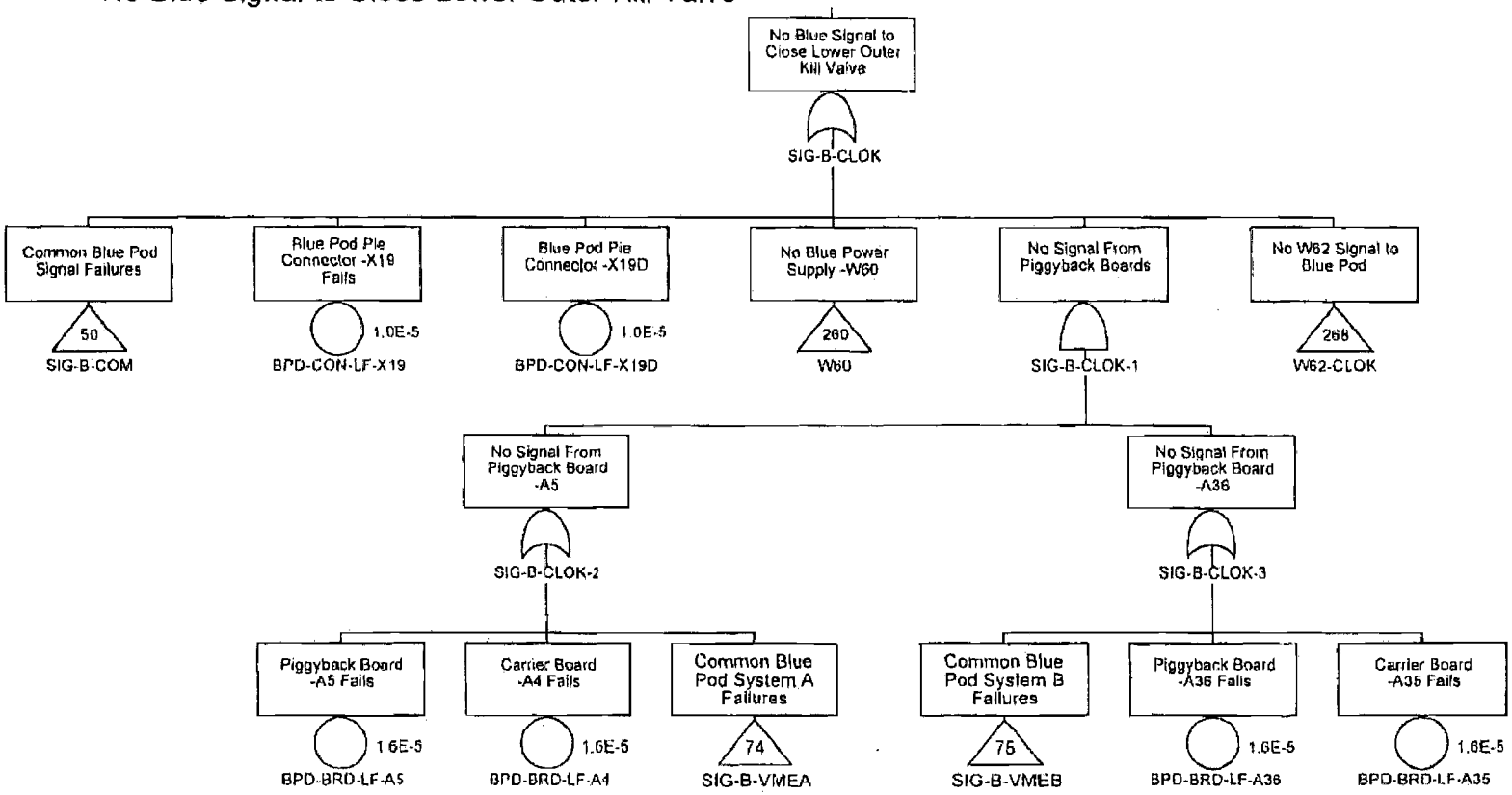

Confidential Treatment Requested by Transocean Holdings LLC

TRN-HCEC-00056497

Common Blue Pod Signal Failures

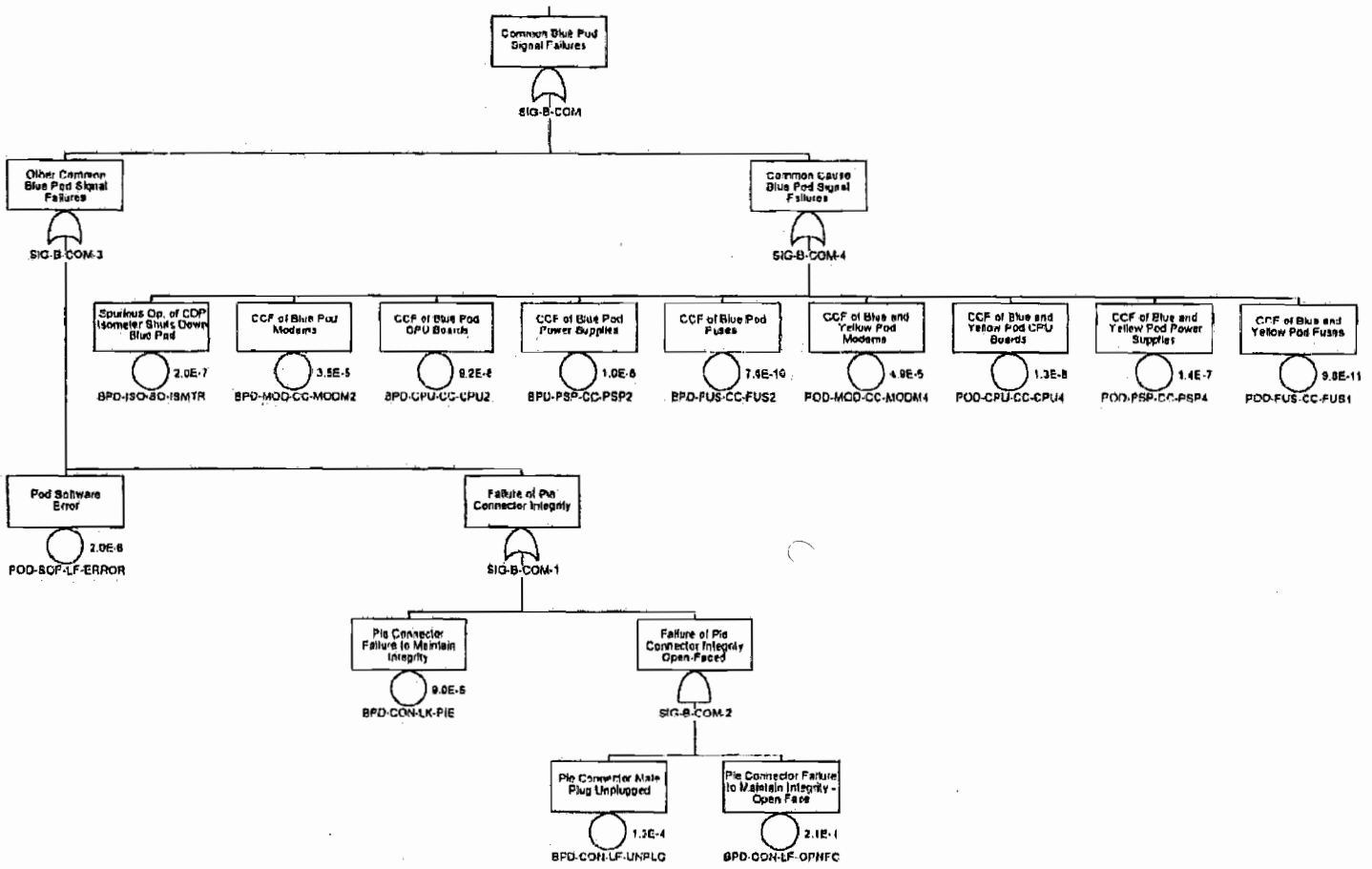

Confidential Treatment Requested by Transocean Holdings LLC

TRN-HCEC-00056498

No Blue Signal to Close Casing Shear Ram

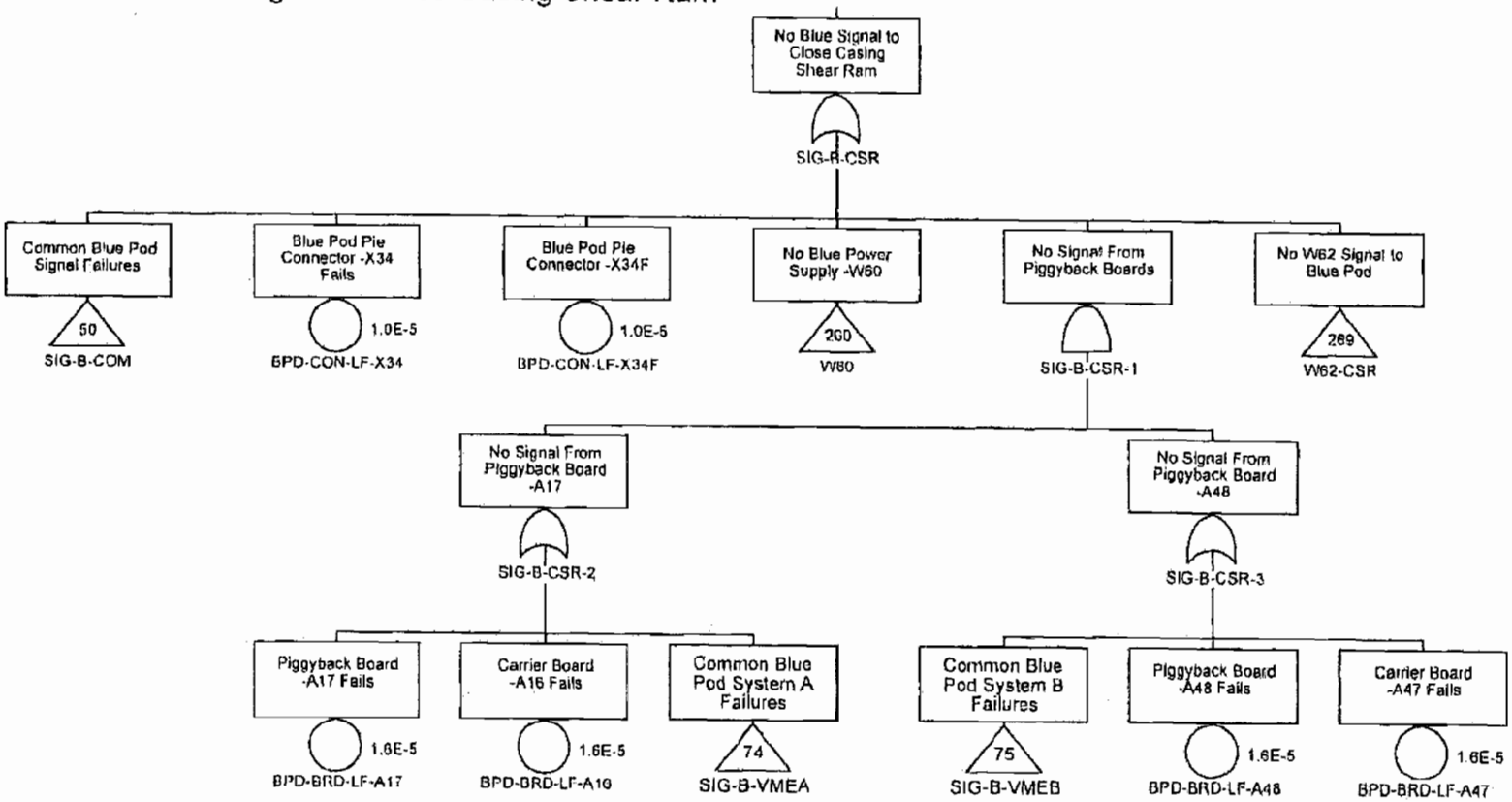

Confidential Treatment Requested by Transocean Holdings LLC

TRN-HCEC-00056499

No Blue Signal to Close Upper Inner Choke Valve

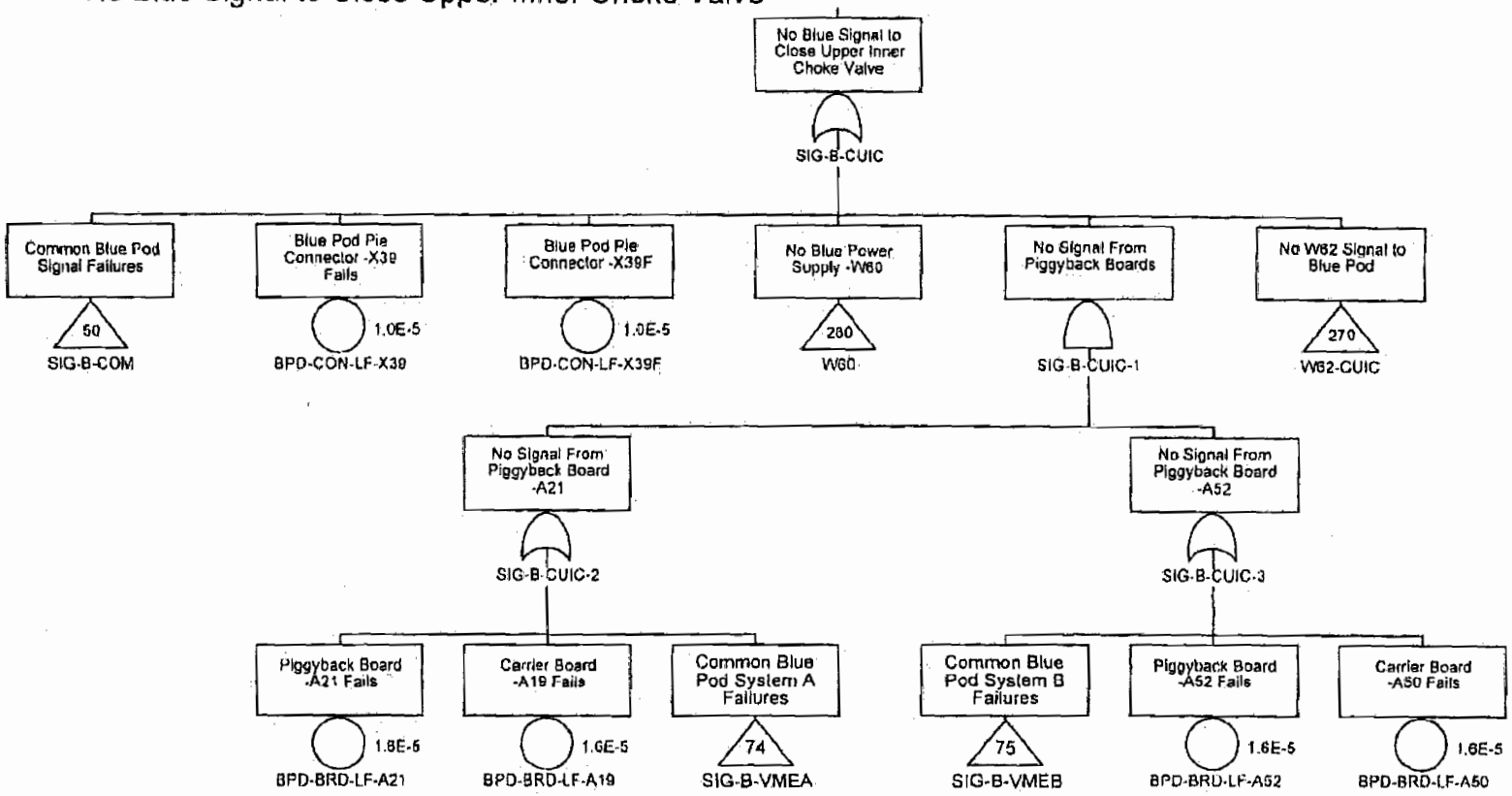

Confidential Treatment Requested by Transocean Holdings LLC

TRN-HCEC-00056500

No Blue Signal to Close Upper Inner Kill Valve

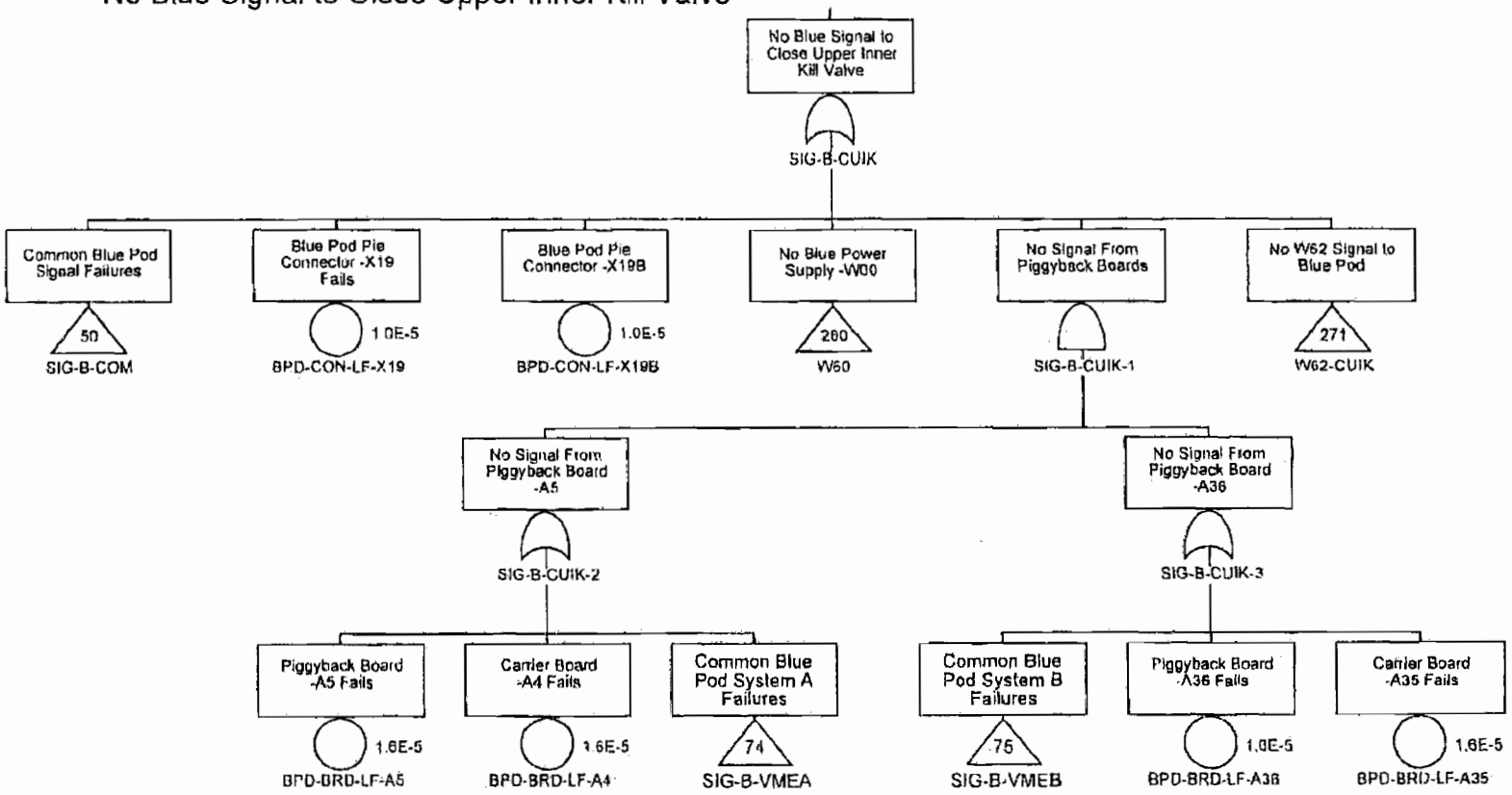

Confidential Treatment Requested by Transocean Holdings LLC

TRN-HCEC-00056501

No Blue Signal to Close Upper Outer Choke Valve

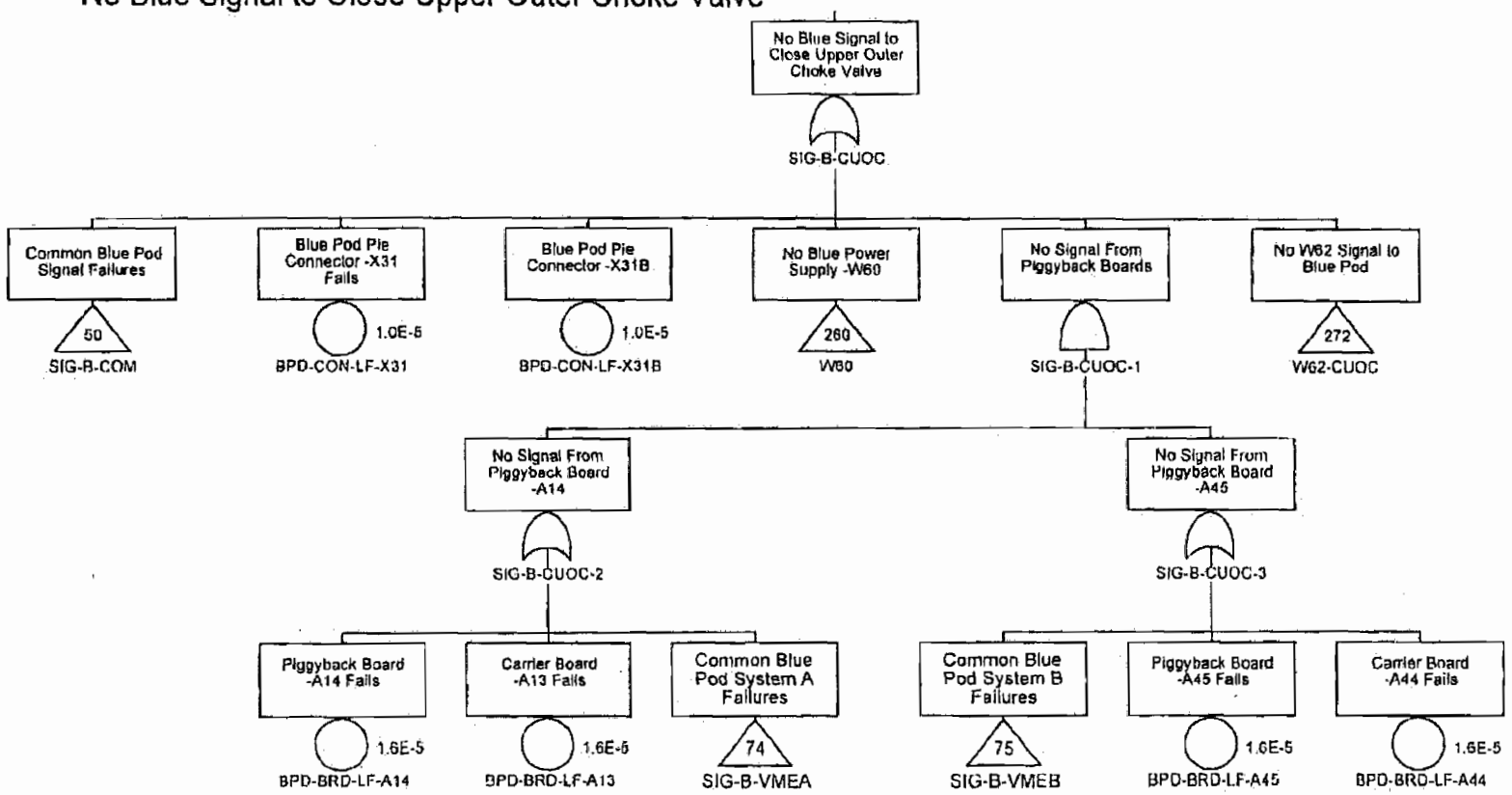

Confidential Treatment Requested by Transocean Holdings LLC

TRN-HCEC-00056502

No Blue Signal to Close Upper Outer Kill Valve

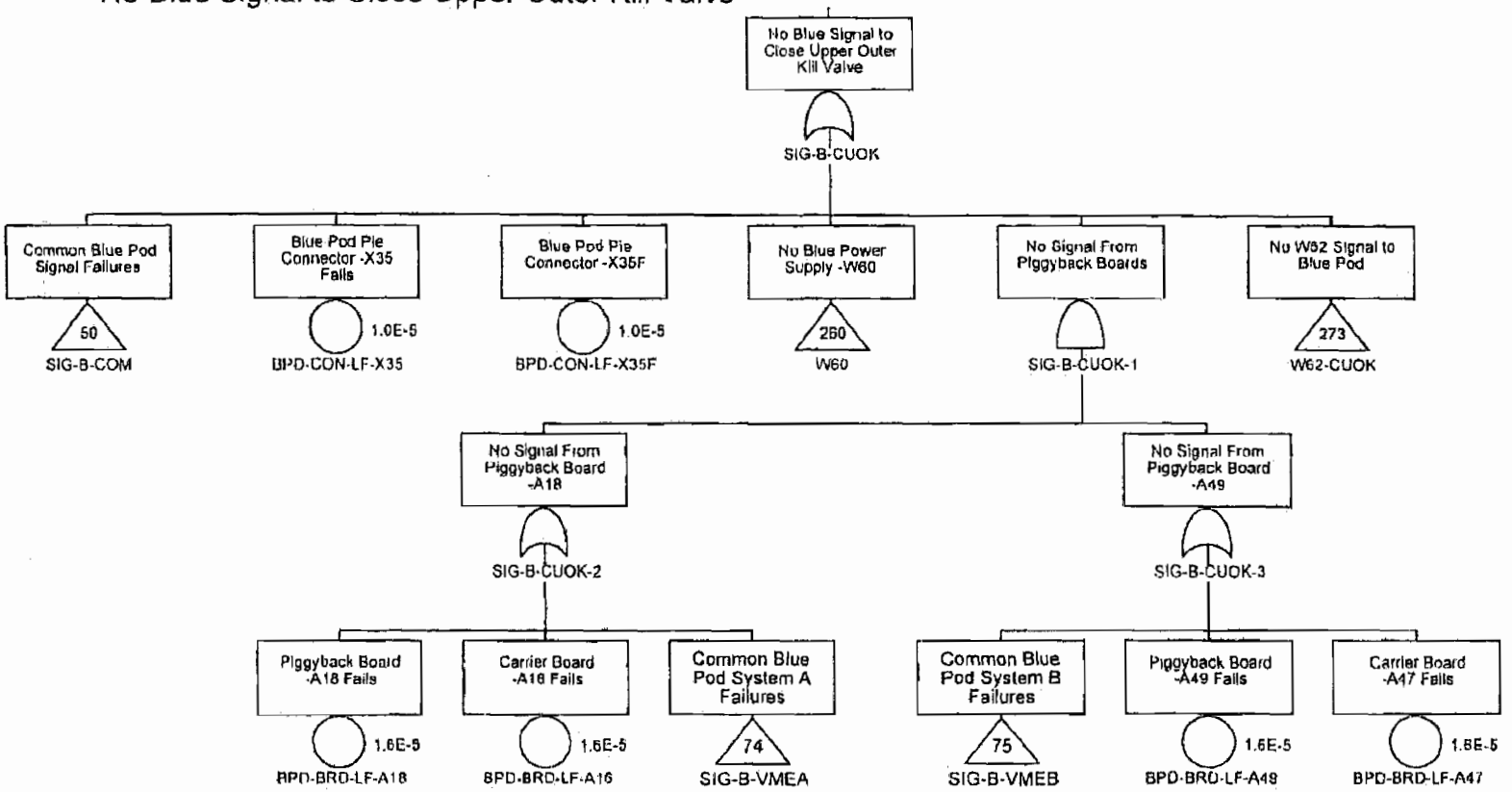

Confidential Treatment Requested by Transocean Holdings LLC

TRN-HCEC-00056503

No Blue Signal to Close Lower Annular

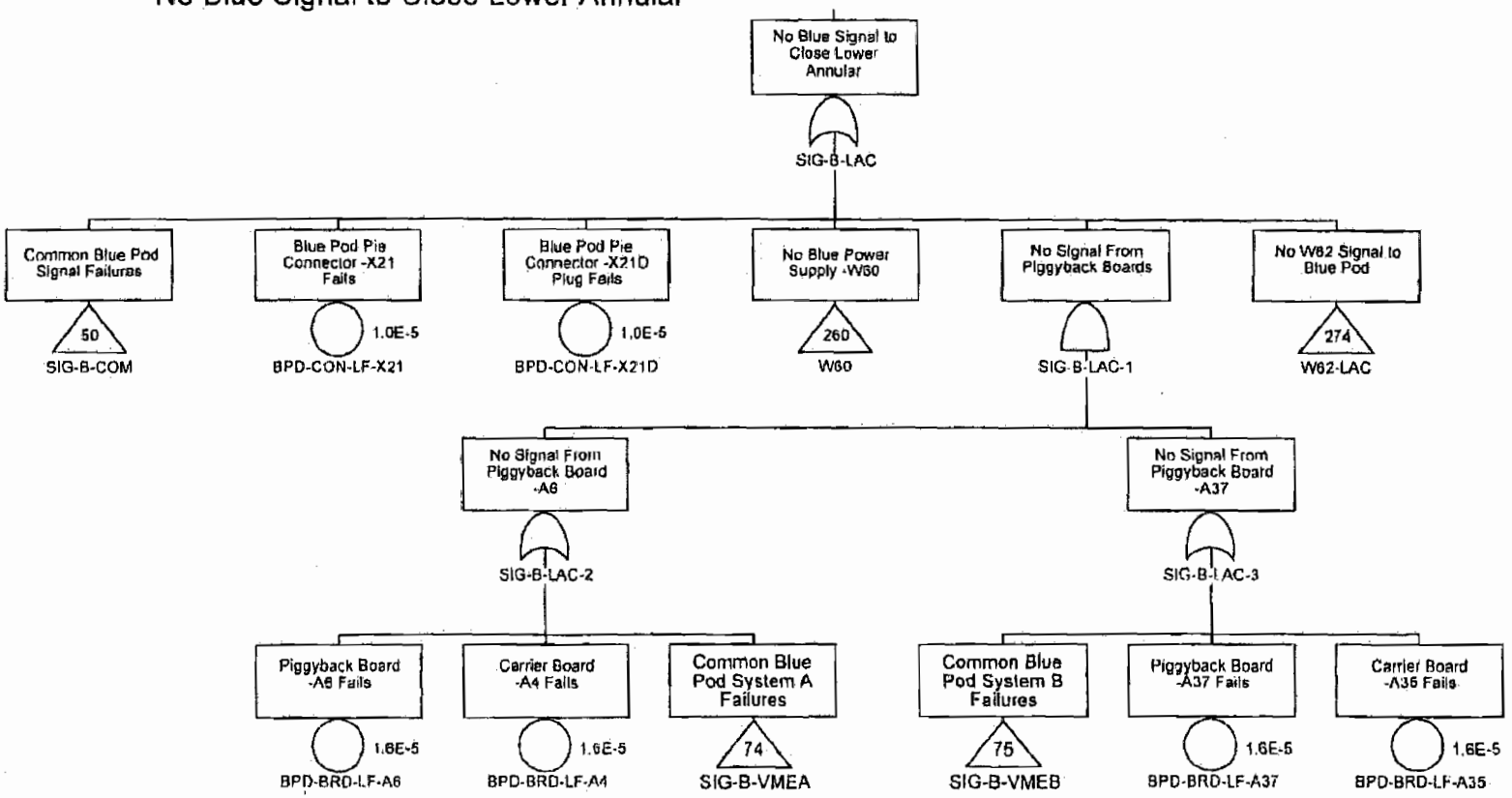

Confidential Treatment Requested by Transocean Holdings LLC

TRN-HCEC-00056504

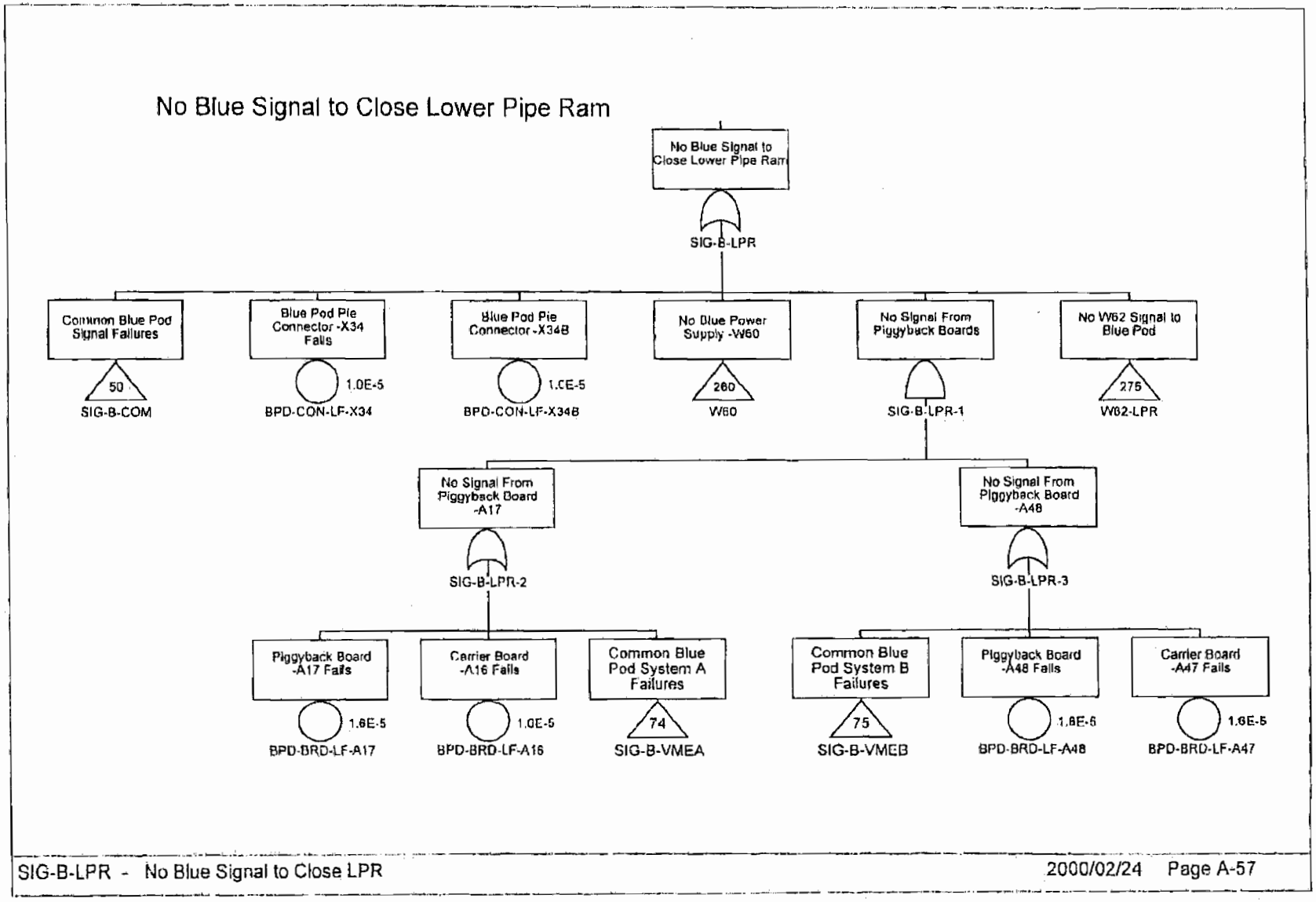

Confidential Treatment Requested by Transocean Holdings LLC

TRN-HCEC-00056505

No Blue Signal to Close Middle Pipe Ram

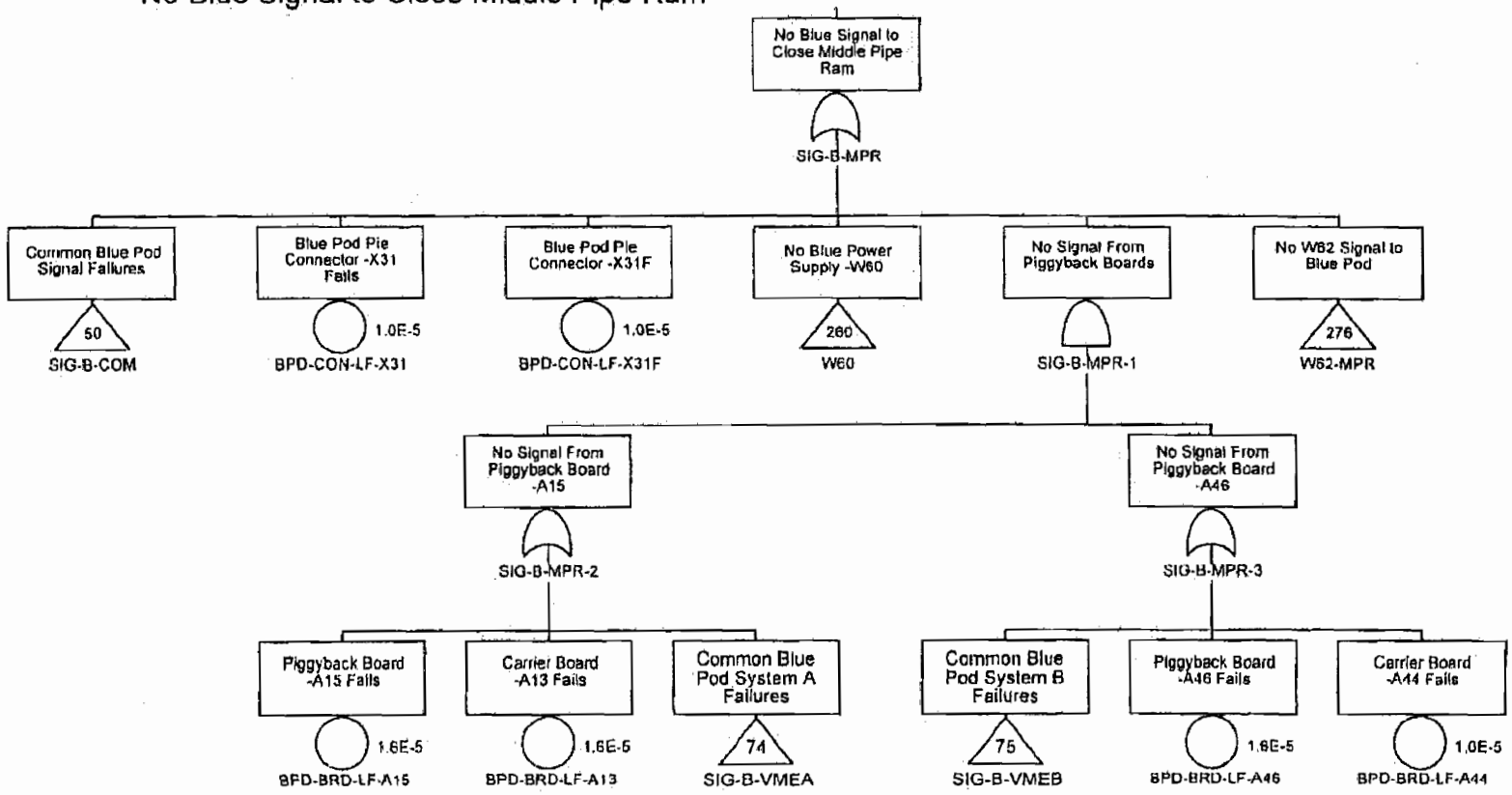

Confidential Treatment Requested by Transocean Holdings LLC

TRN-HCEC-00056506

No Blue Signal to Open Lower Inner Choke Valve

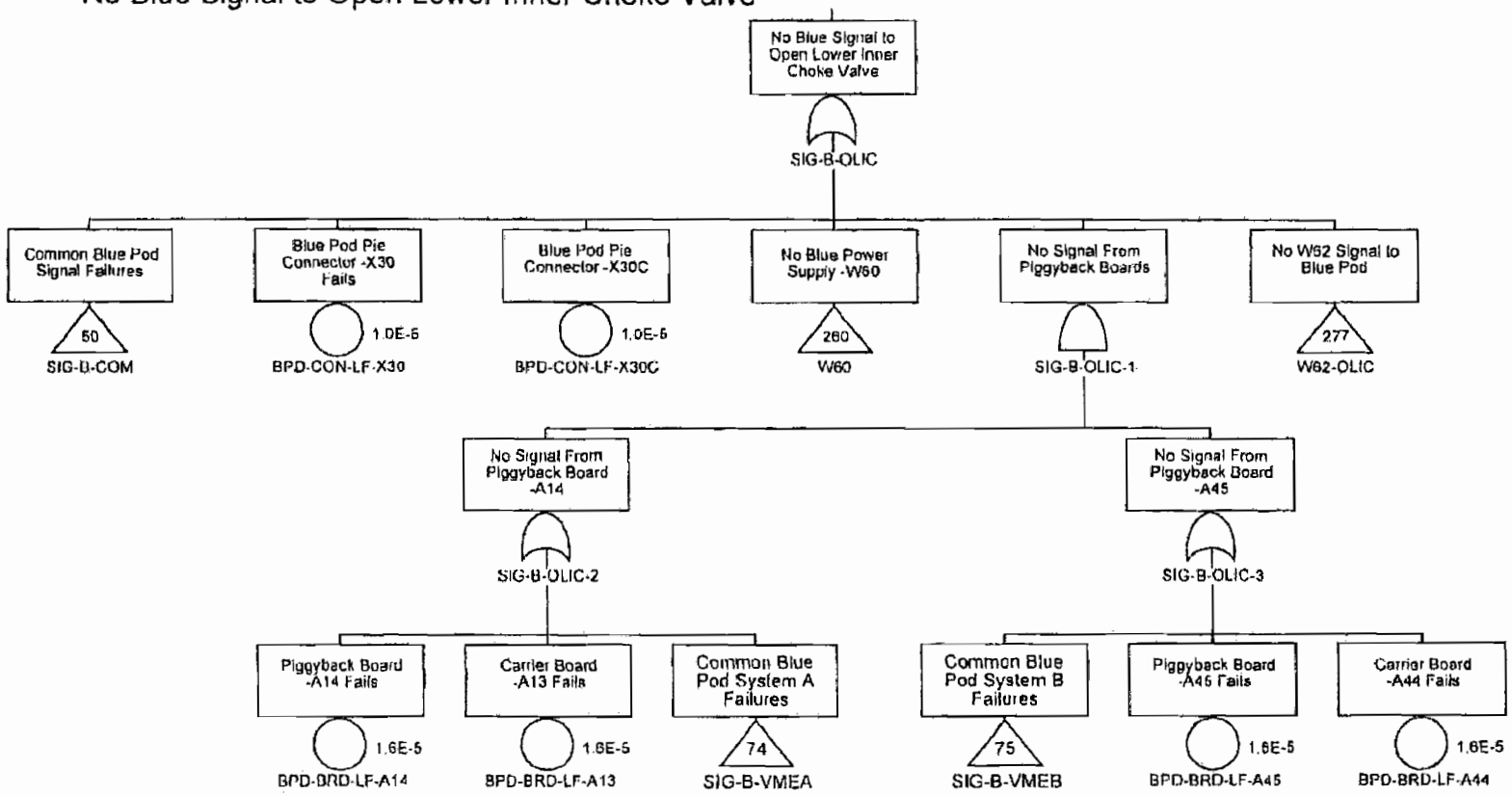

Confidential Treatment Requested by Transocean Holdings LLC

TRN-HCEC-00056507

No Blue Signal to Open Lower Inner Kill Valve

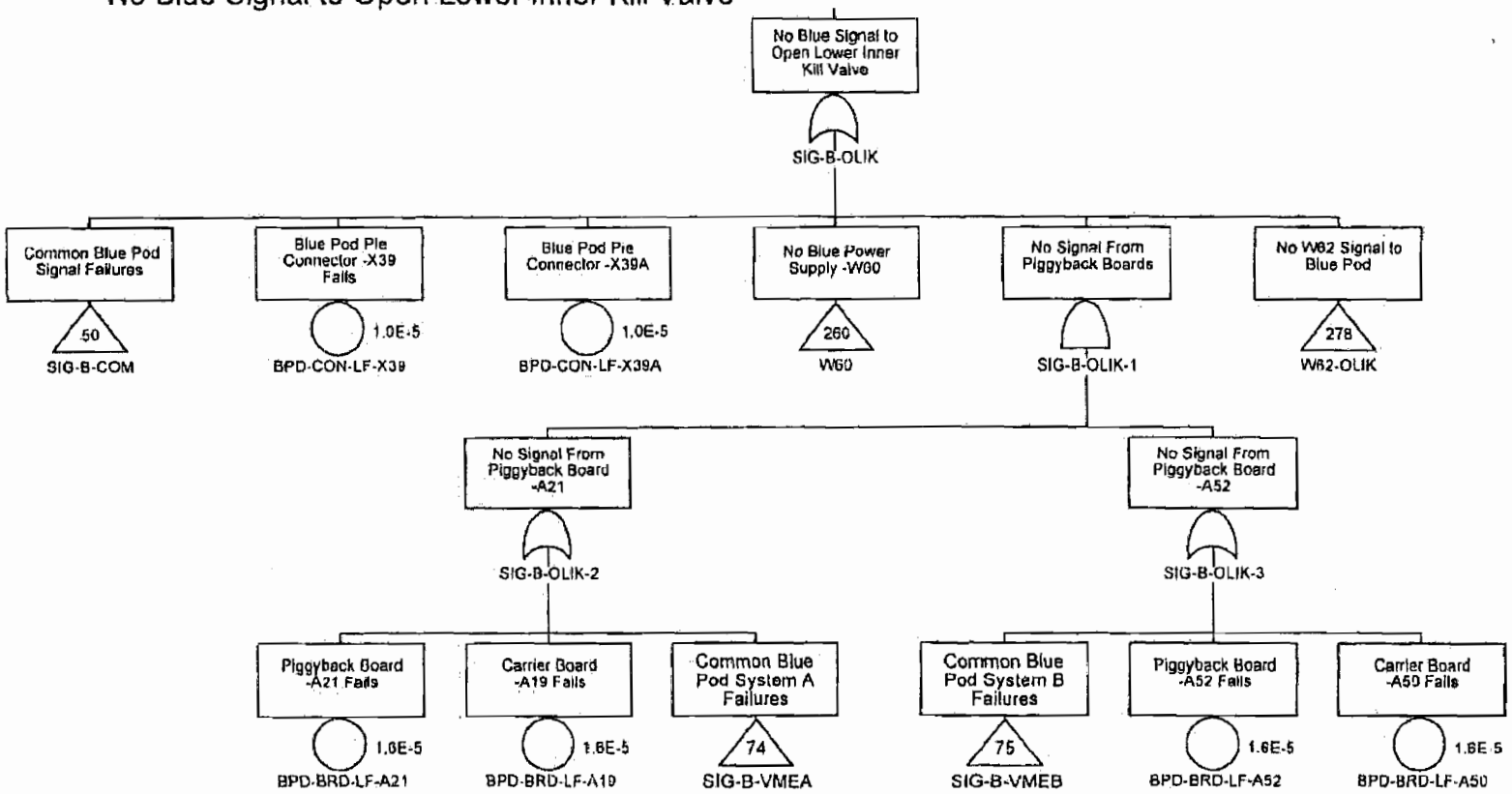

Confidential Treatment Requested by Transocean Holdings LLC

TRN-HCEC-00056508

No Blue Signal to Open Lower Outer Choke Valve

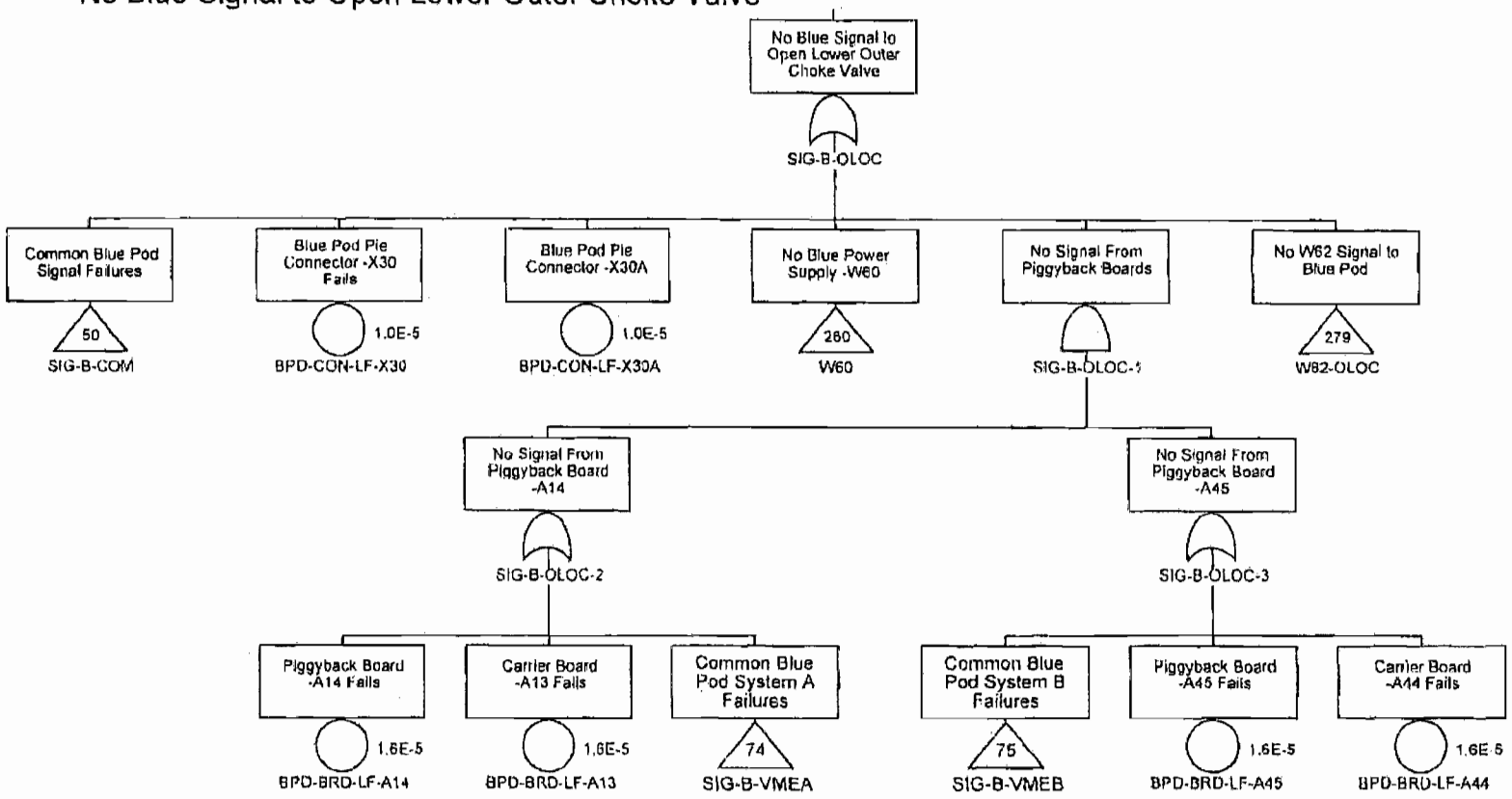

Confidential Treatment Requested by Transocean Holdings LLC

TRN-HCEC-00056509

No Blue Signal to Open Lower Outer Kill Valve

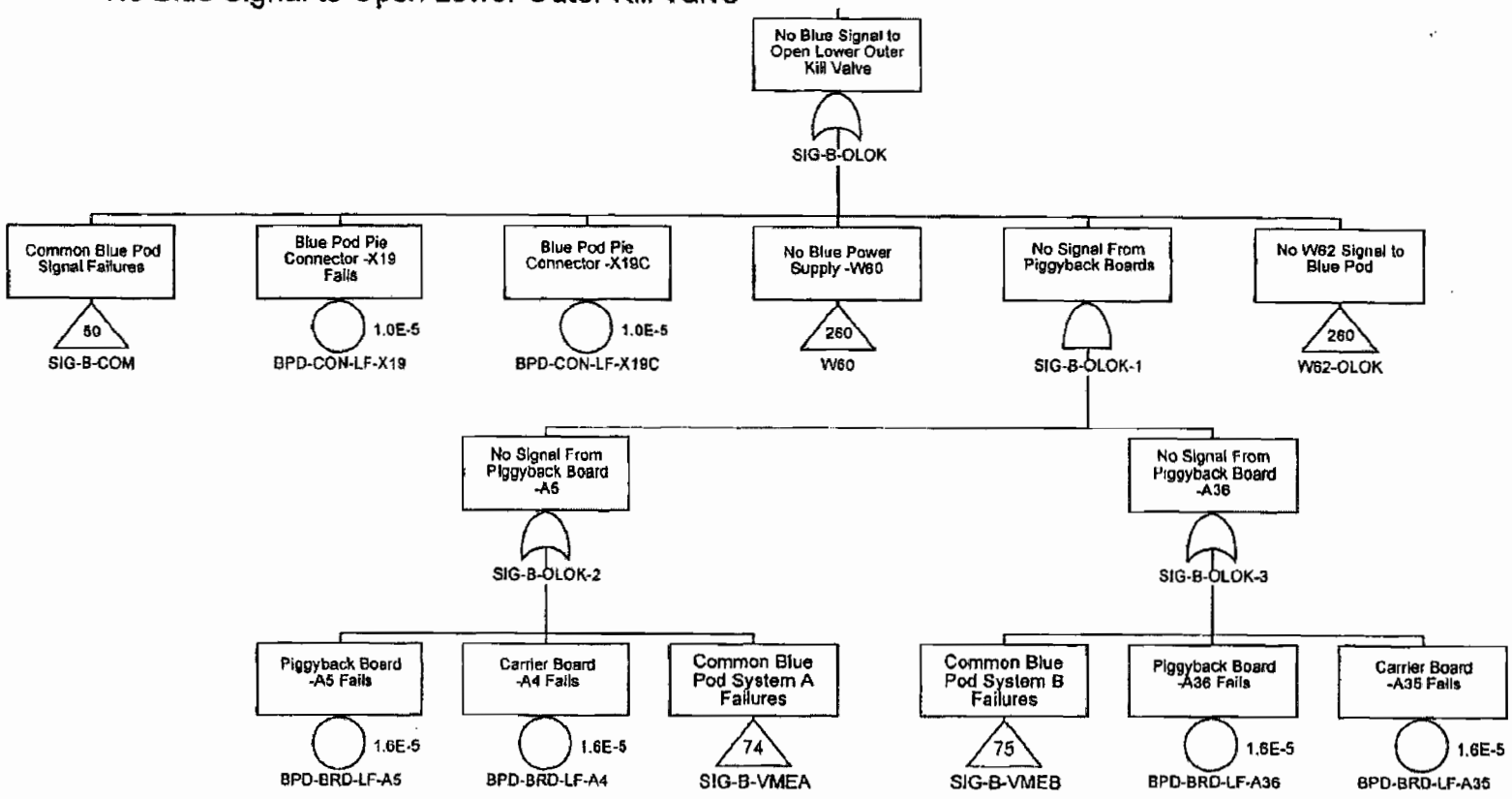

Confidential Treatment Requested by Transocean Holdings LLC

TRN-HCEC-00056510

No Blue Signal to Open Upper Inner Choke Valve

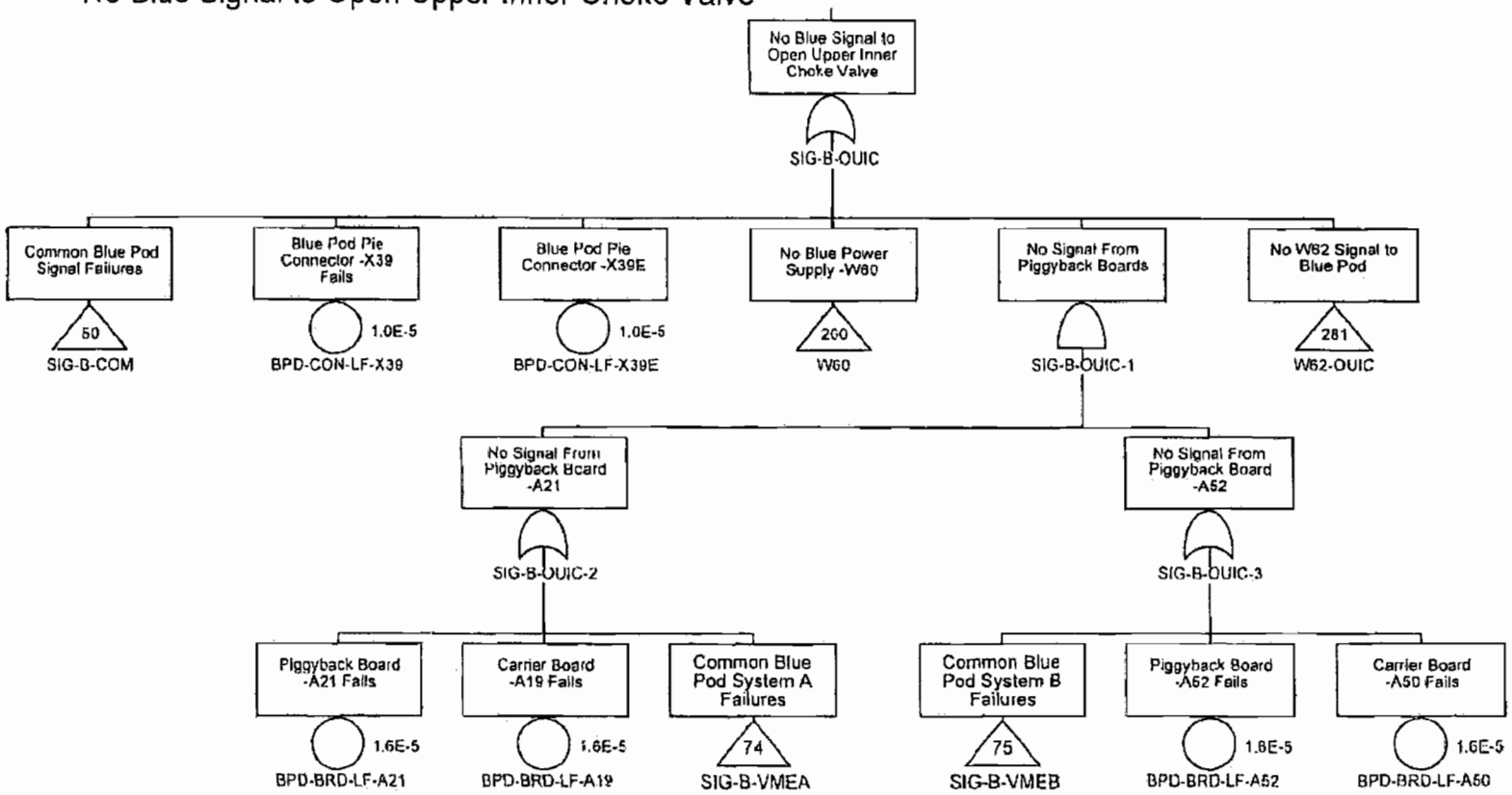

Confidential Treatment Requested by Transocean Holdings LLC

TRN-HCEC-00056511

No Blue Signal to Open Upper Inner Kill Valve

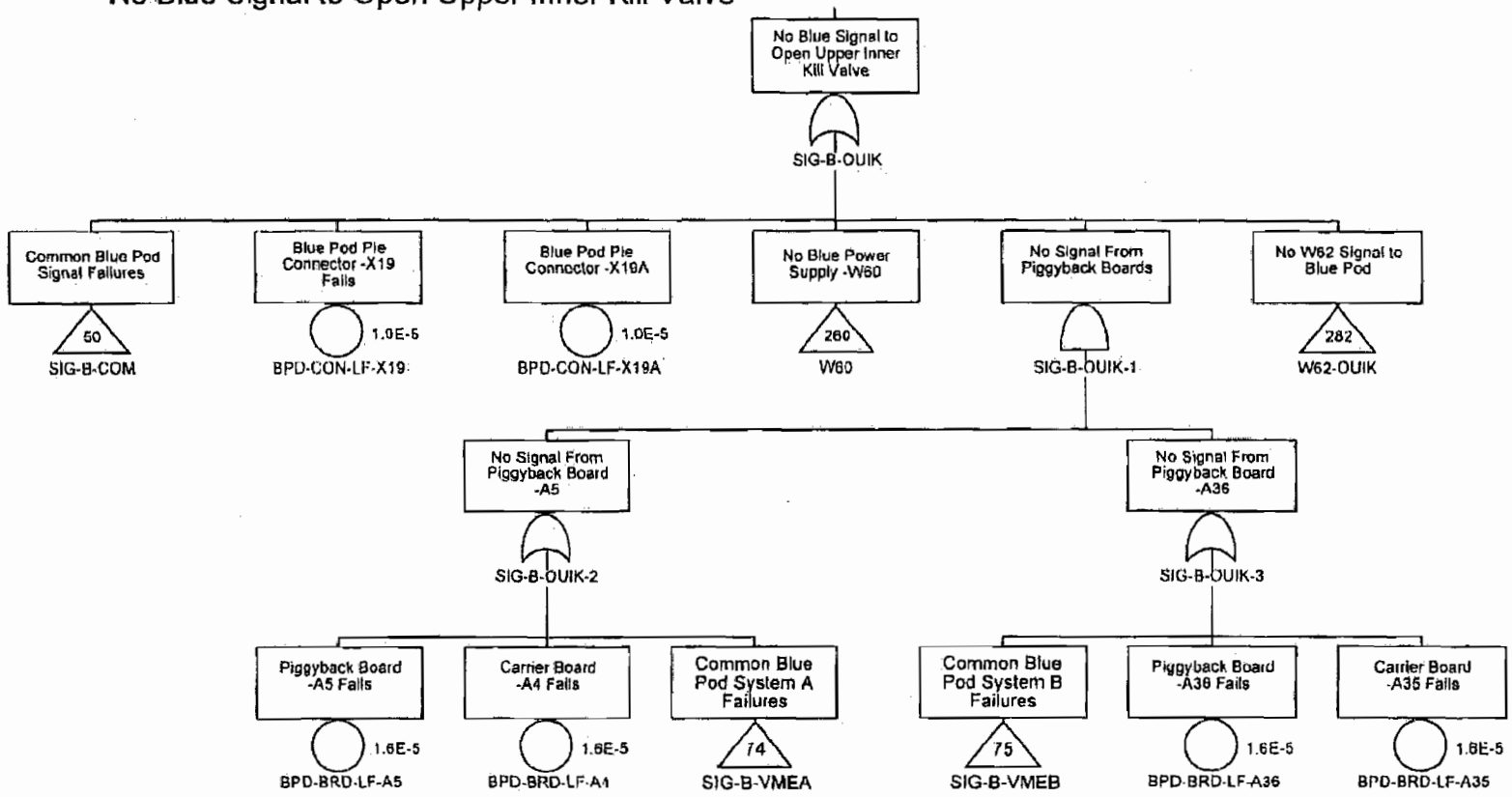

Confidential Treatment Requested by Transocean Holdings LLC

TRN-HCEC-00056512

No Blue Signal to Open Upper Outer Choke Valve

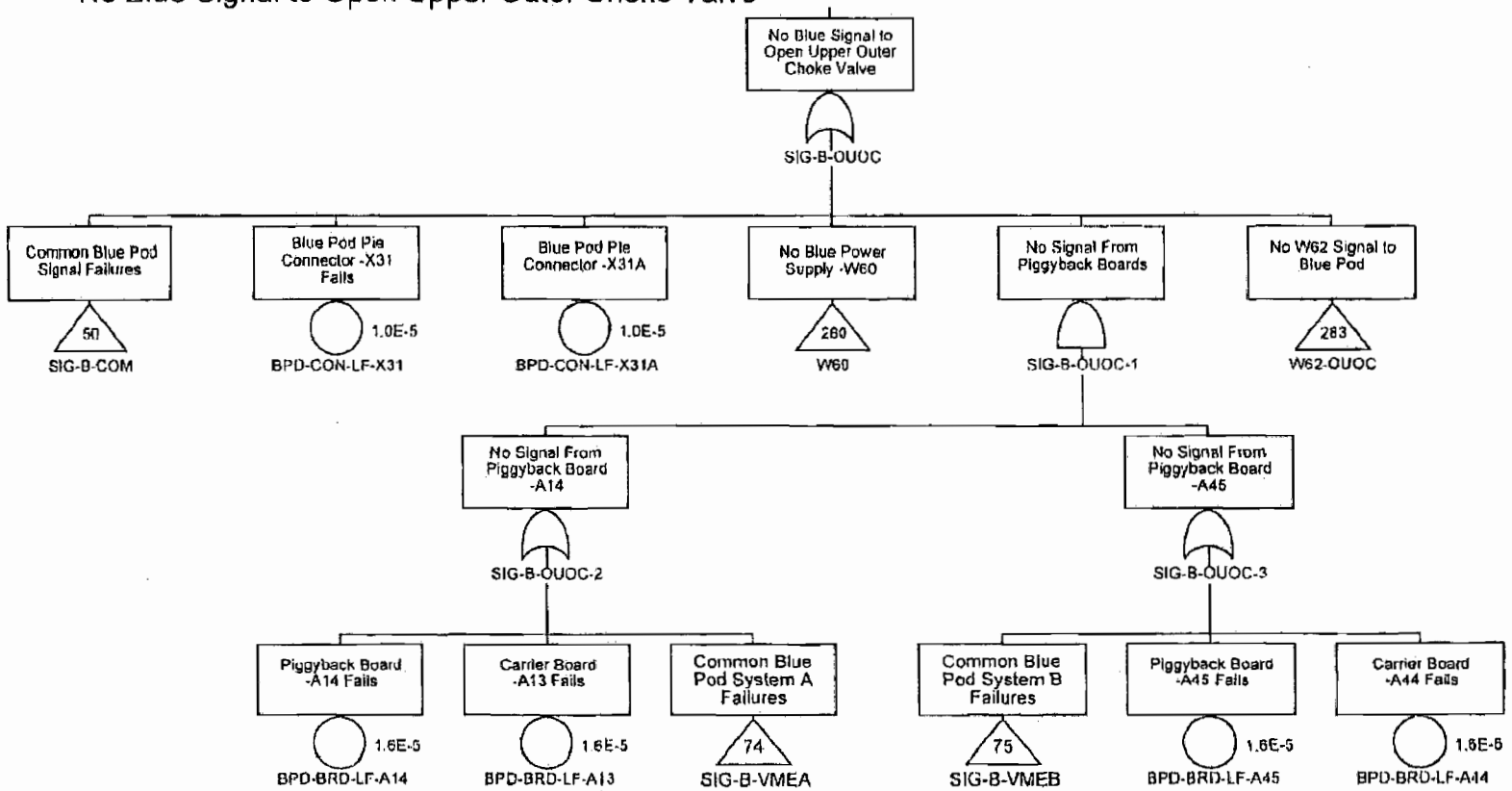

Confidential Treatment Requested by Transocean Holdings LLC

TRN-HCEC-00056513

No Blue Signal to Open Upper Outer Kill Valve

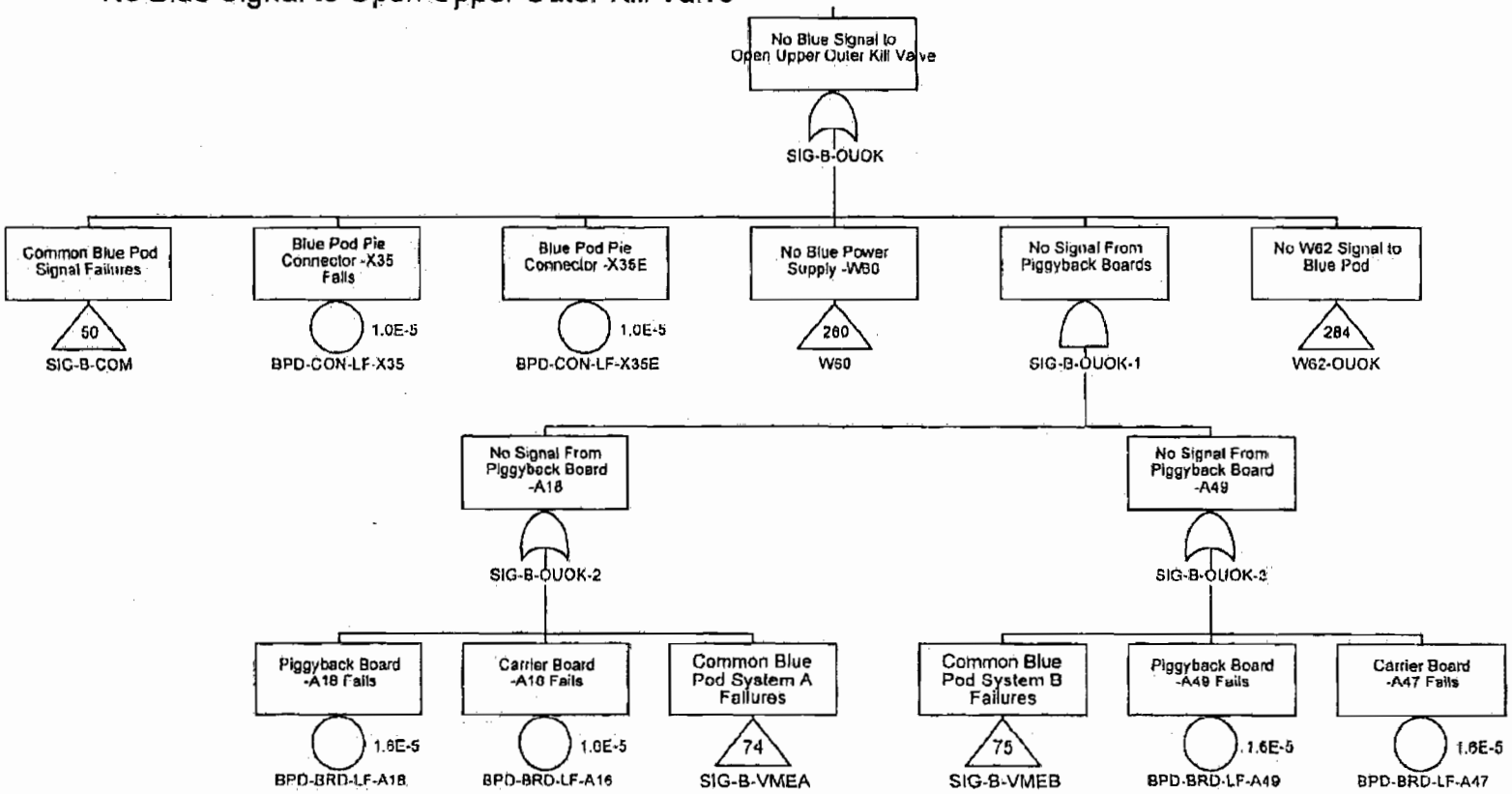

Confidential Treatment Requested by Transocean Holdings LLC

TRN-HCEC-00056514

No Blue Signal to Unlatch Primary Disconnect

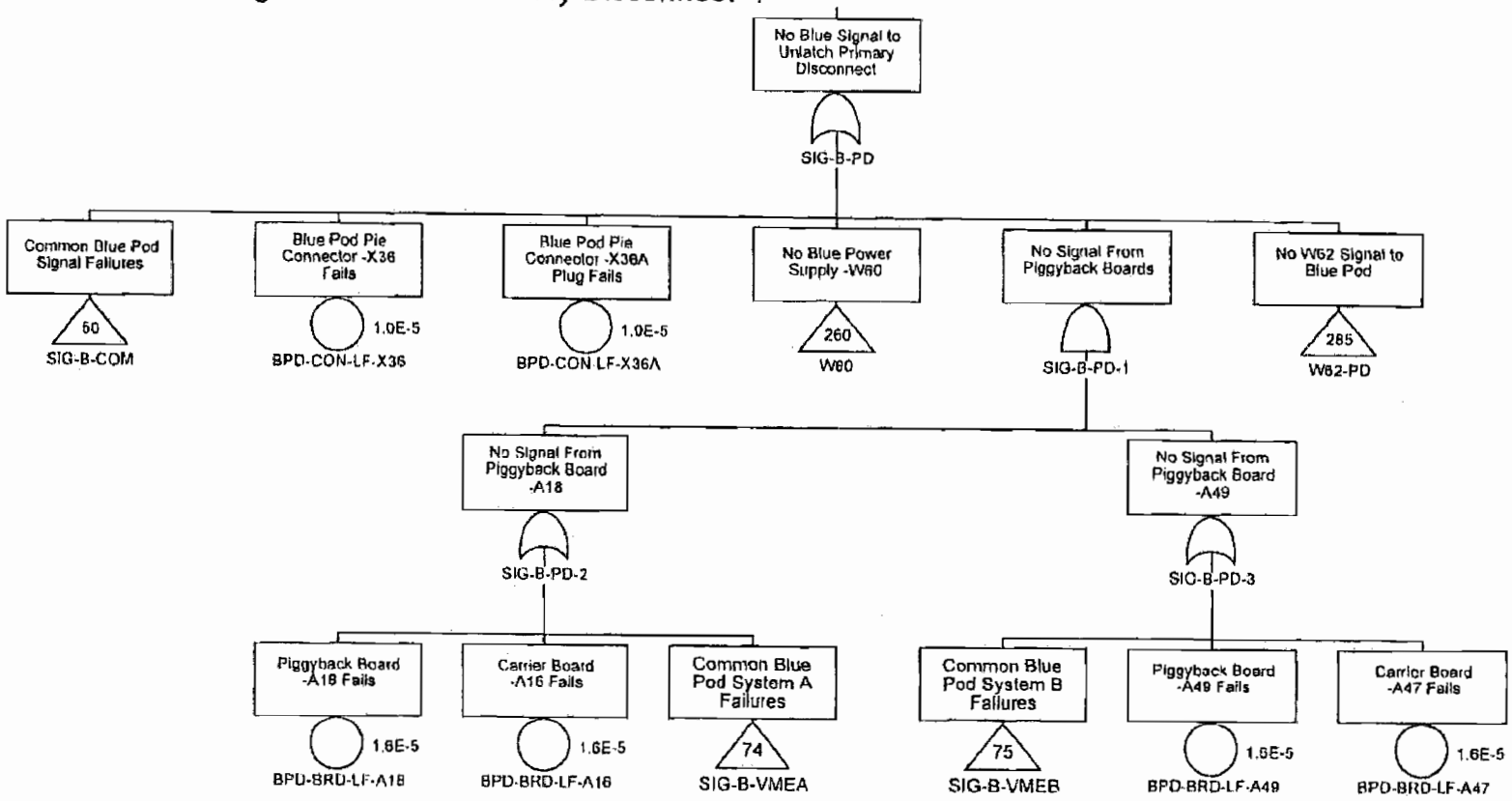

Confidential Treatment Requested by Transocean Holdings LLC

TRN-HCEC-00056515

No Blue Signal to Open Pod Select Valve

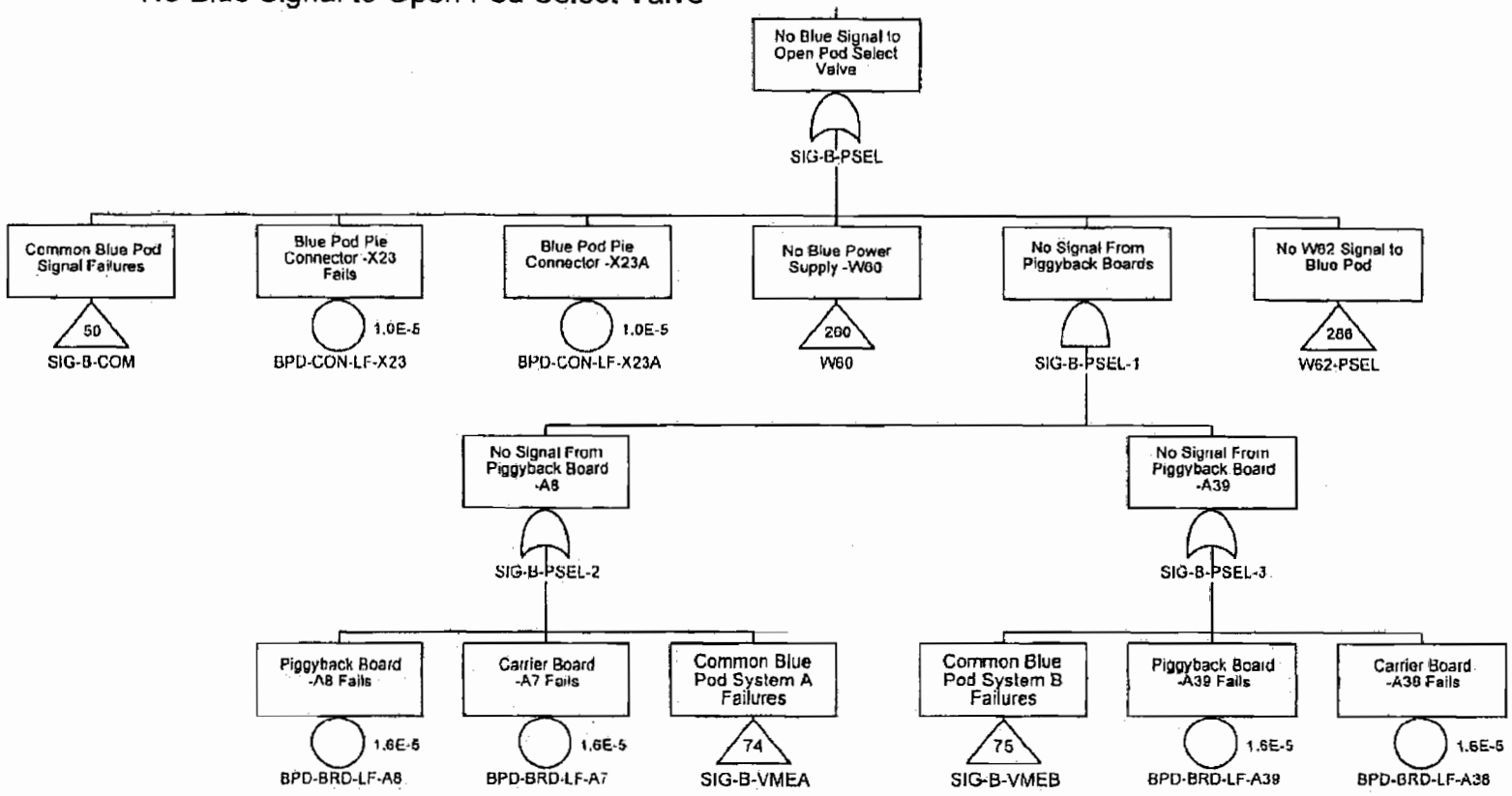

Confidential Treatment Requested by Transocean Holdings LLC

TRN-HCEC-00056516

No Blue Signal to Unlatch Secondary Disconnect

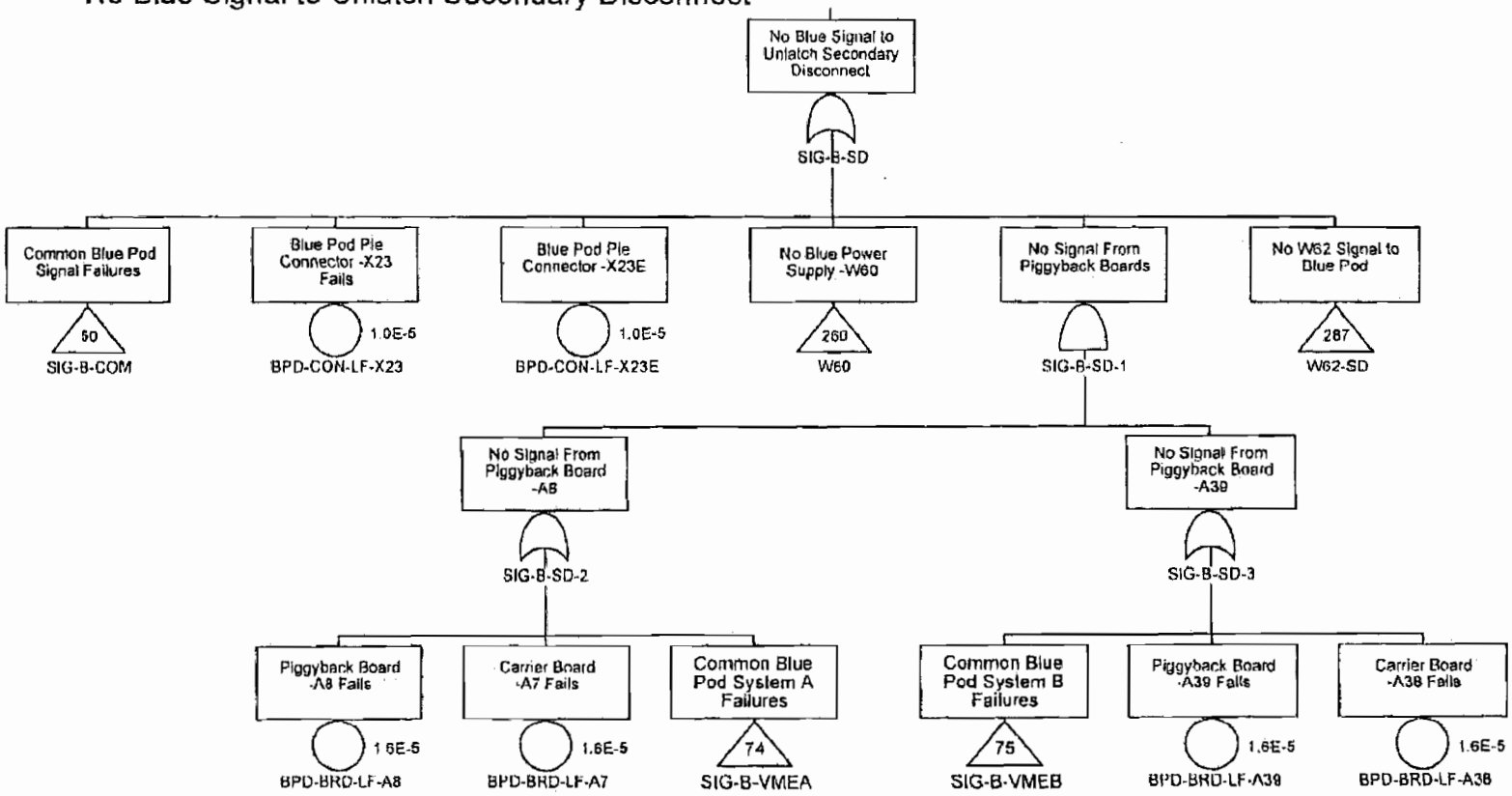

Confidential Treatment Requested by Transocean Holdings LLC

TRN-HCEC-00056517

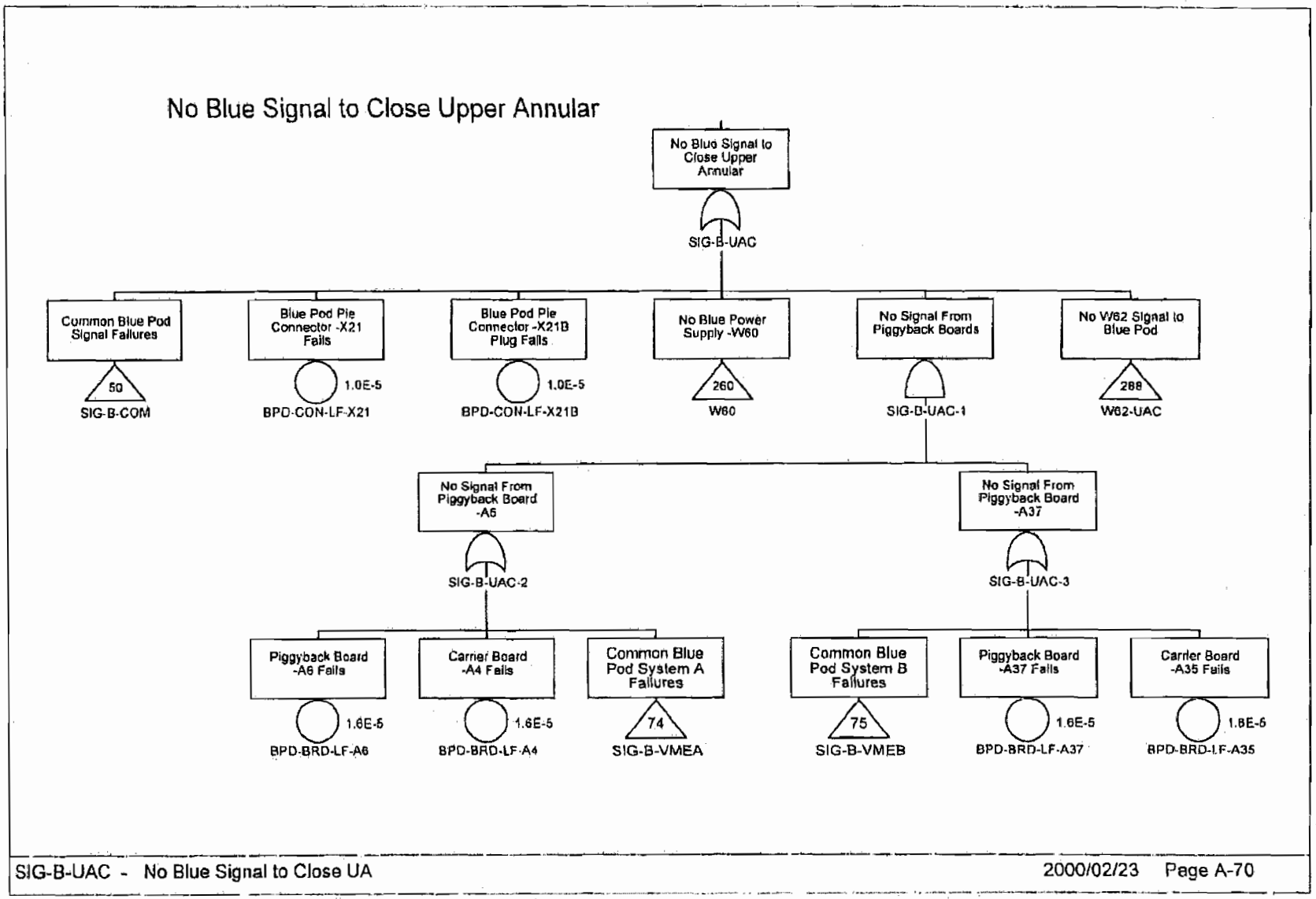

Confidential Treatment Requested by Transocean Holdings LLC

TRN-HCEC-00056518

No Blue Signal to Close Blind Shear Ram - High Pressure

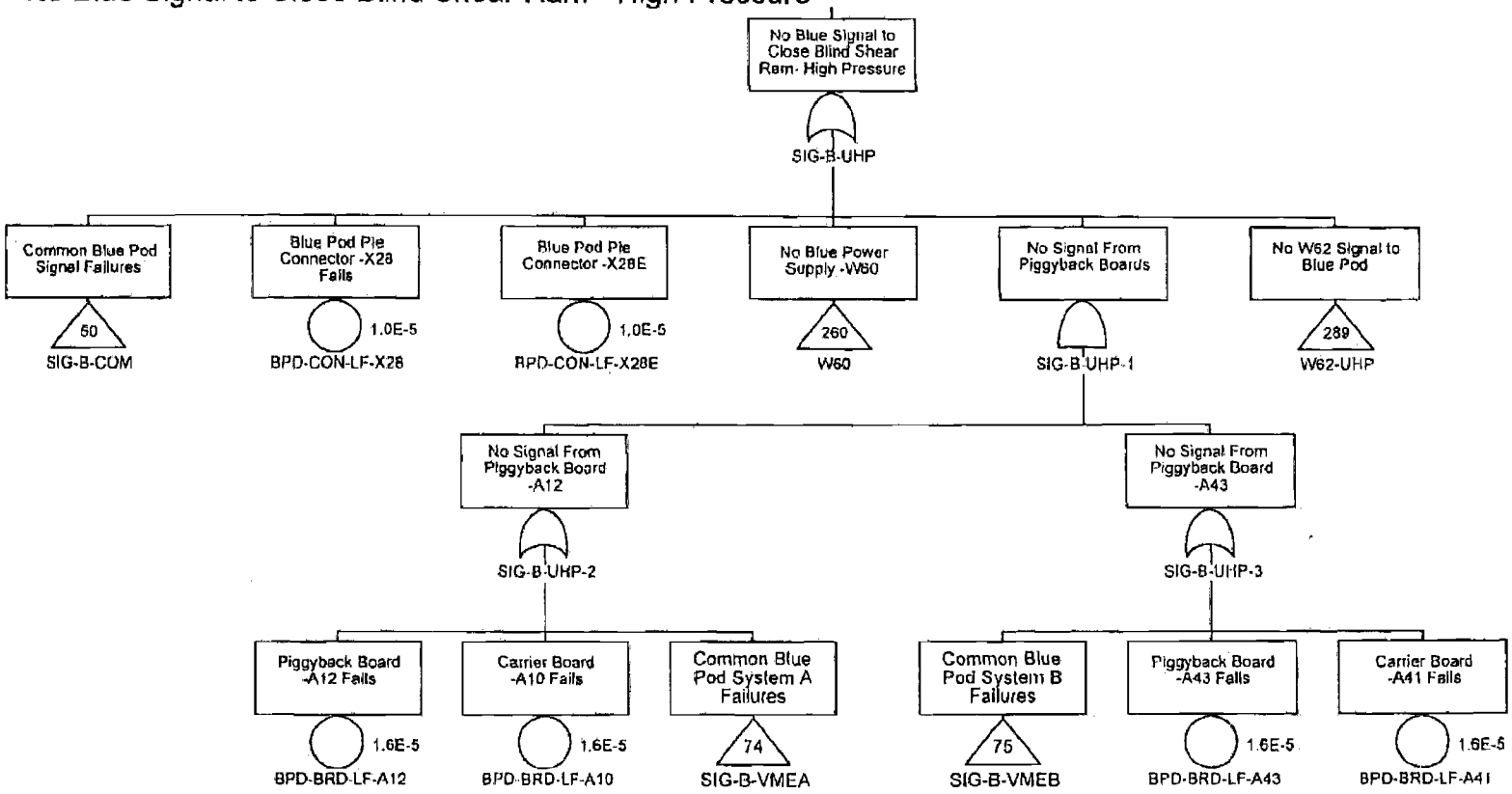

Confidential Treatment Requested by Transocean Holdings LLC

TRN-HCEC-00056519

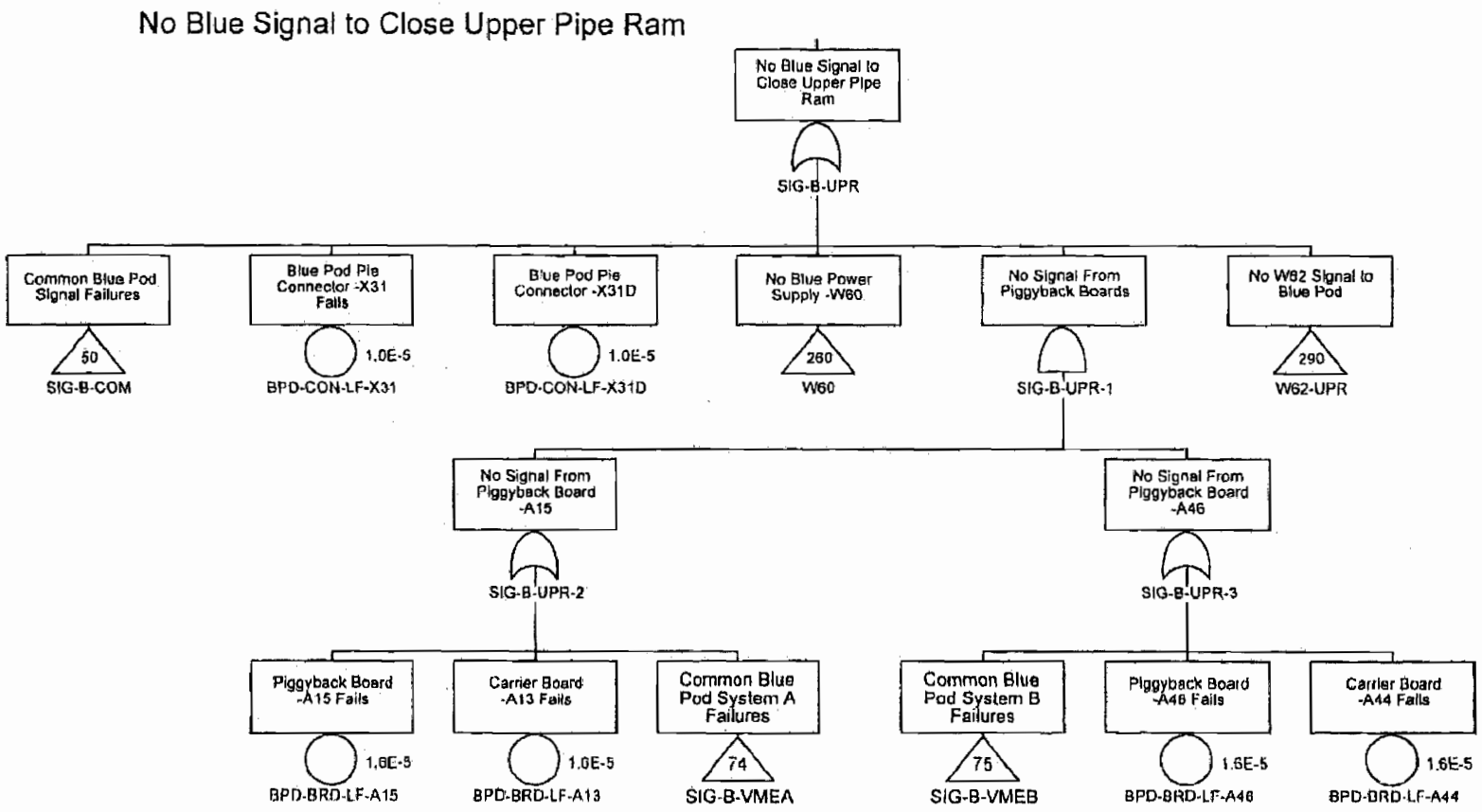

Confidential Treatment Requested by Transocean Holdings LLC

TRN-HCEC-00056520

No Blue Signal to Close Blind Shear Ram

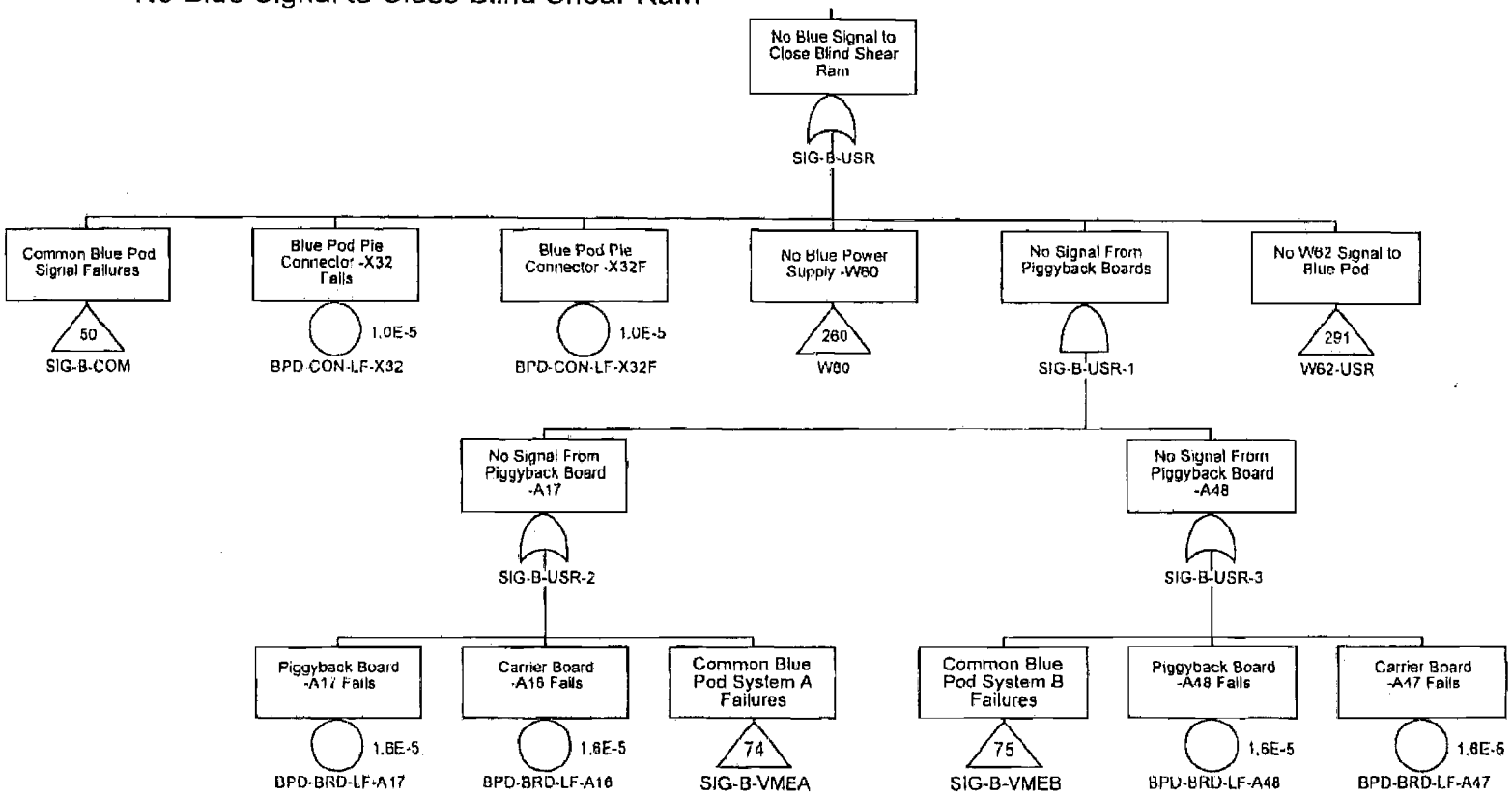

Confidential Treatment Requested by Transocean Holdings LLC

TRN-HCEC-00056521

Common Blue Pod System A Failures

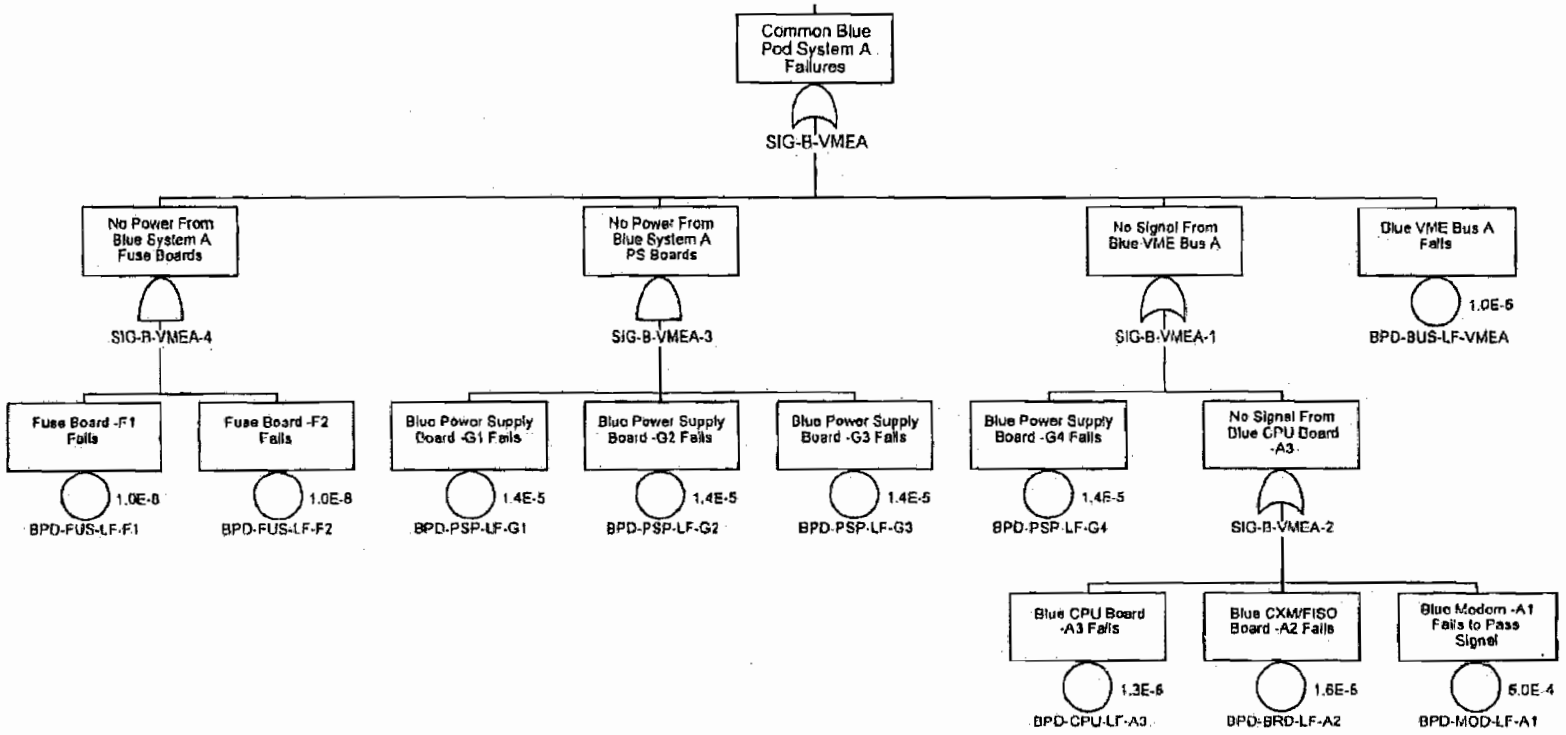

Confidential Treatment Requested by Transocean Holdings LLC

TRN-HCEC-00056522

Common Blue Pod System B Failures

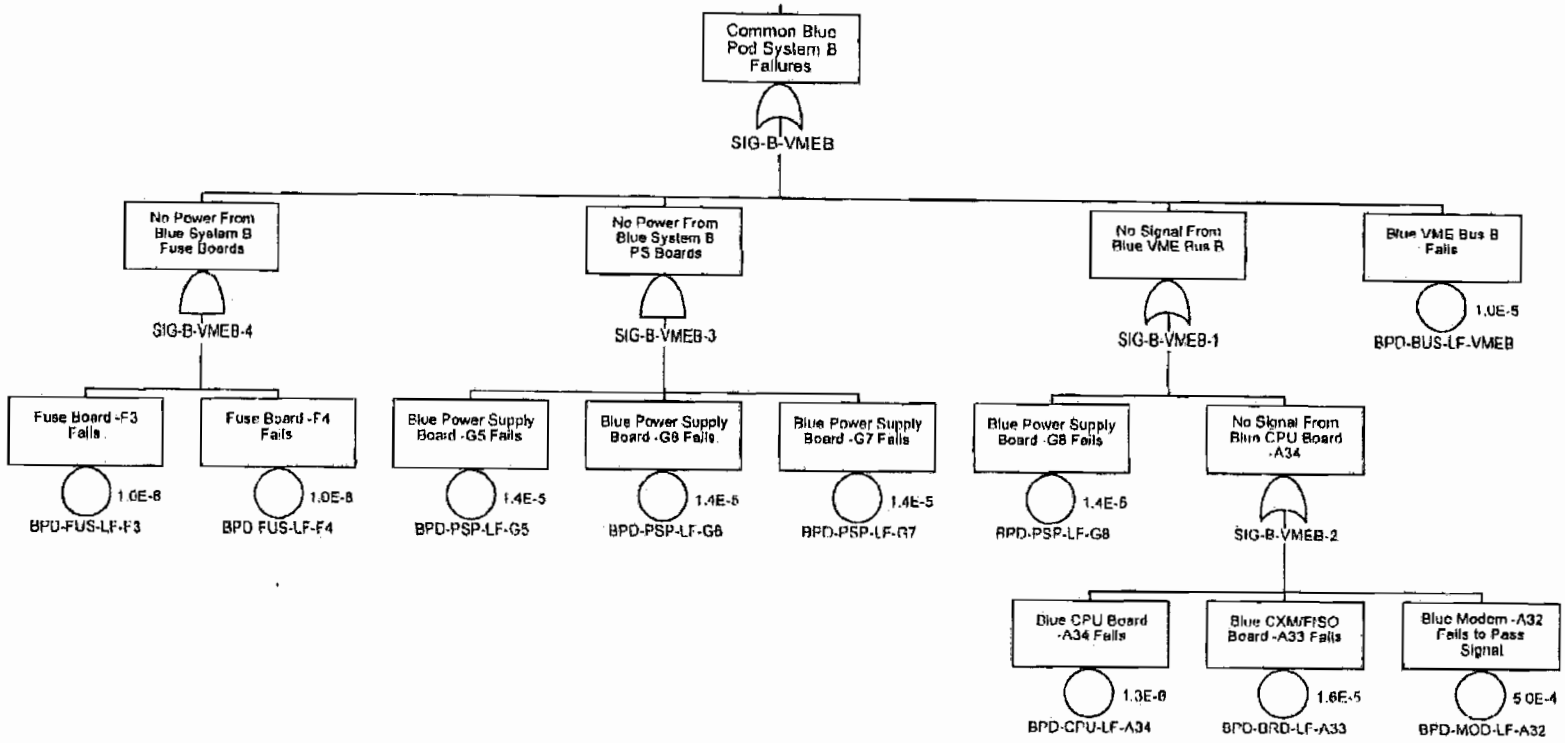

Confidential Treatment Requested by Transocean Holdings LLC

TRN-HCEC-00056523

No Blue Signal to Open Yellow Conduit Supply

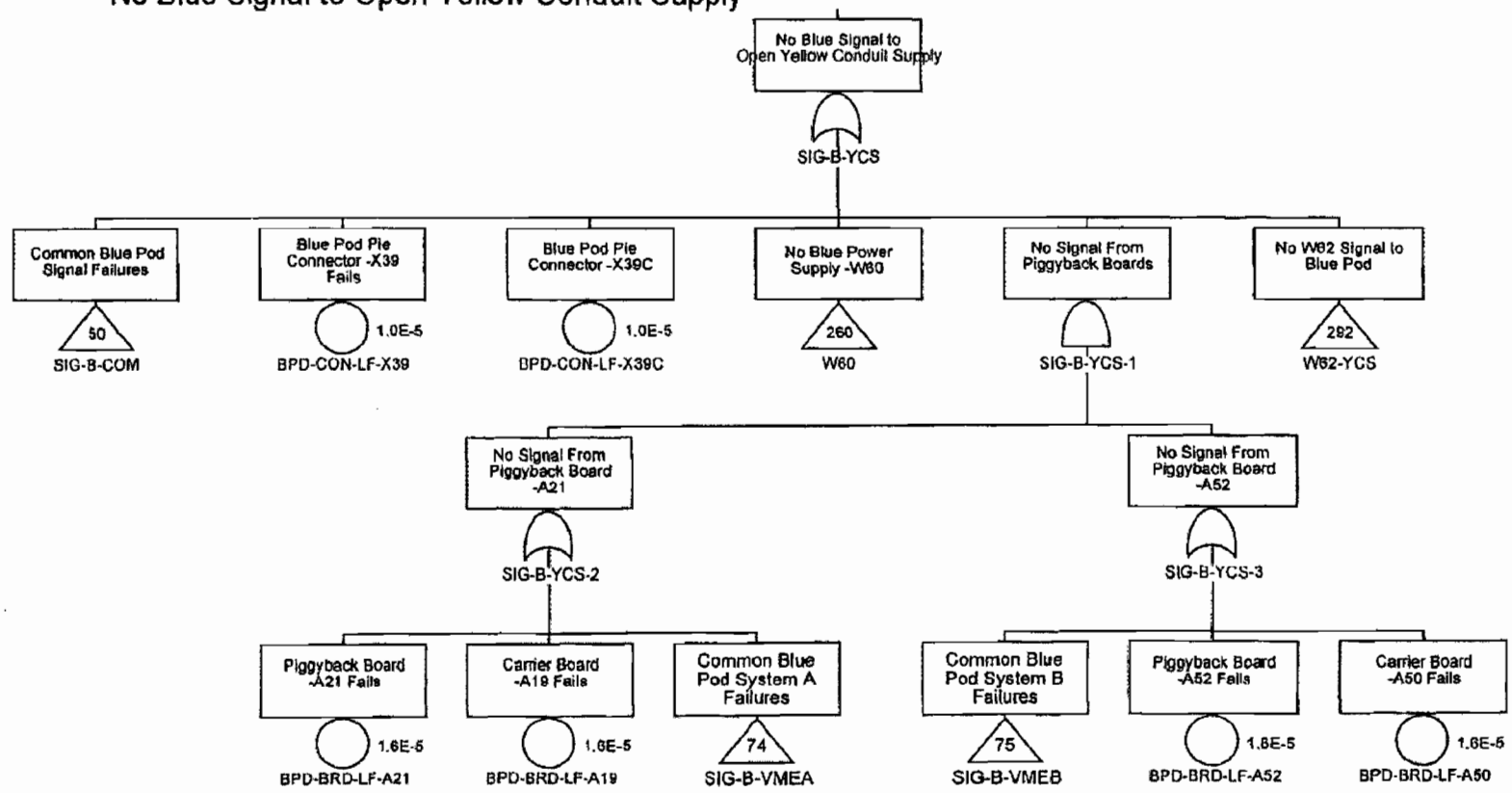

C

onfidential Treatment Requested by Transocean Holdings LLC

TRN-HCEC-00056524

No Blue Signal to Open Yellow Hot Line Supply

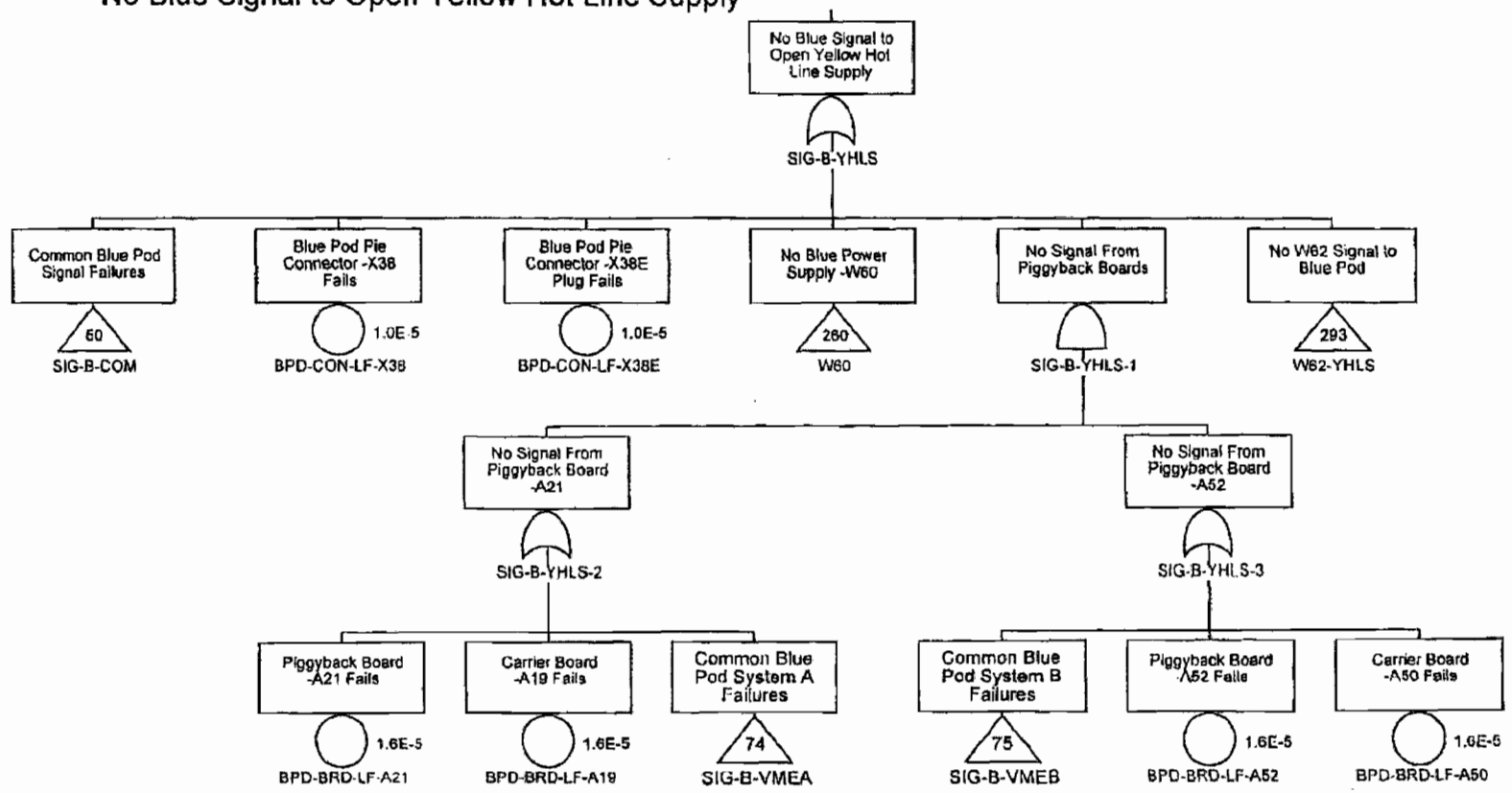

Confidential Treatment Requested by Transocean Holdings LLC

TRN-HCEC-00056525

No Yellow Signal to Open Blue Conduit Supply

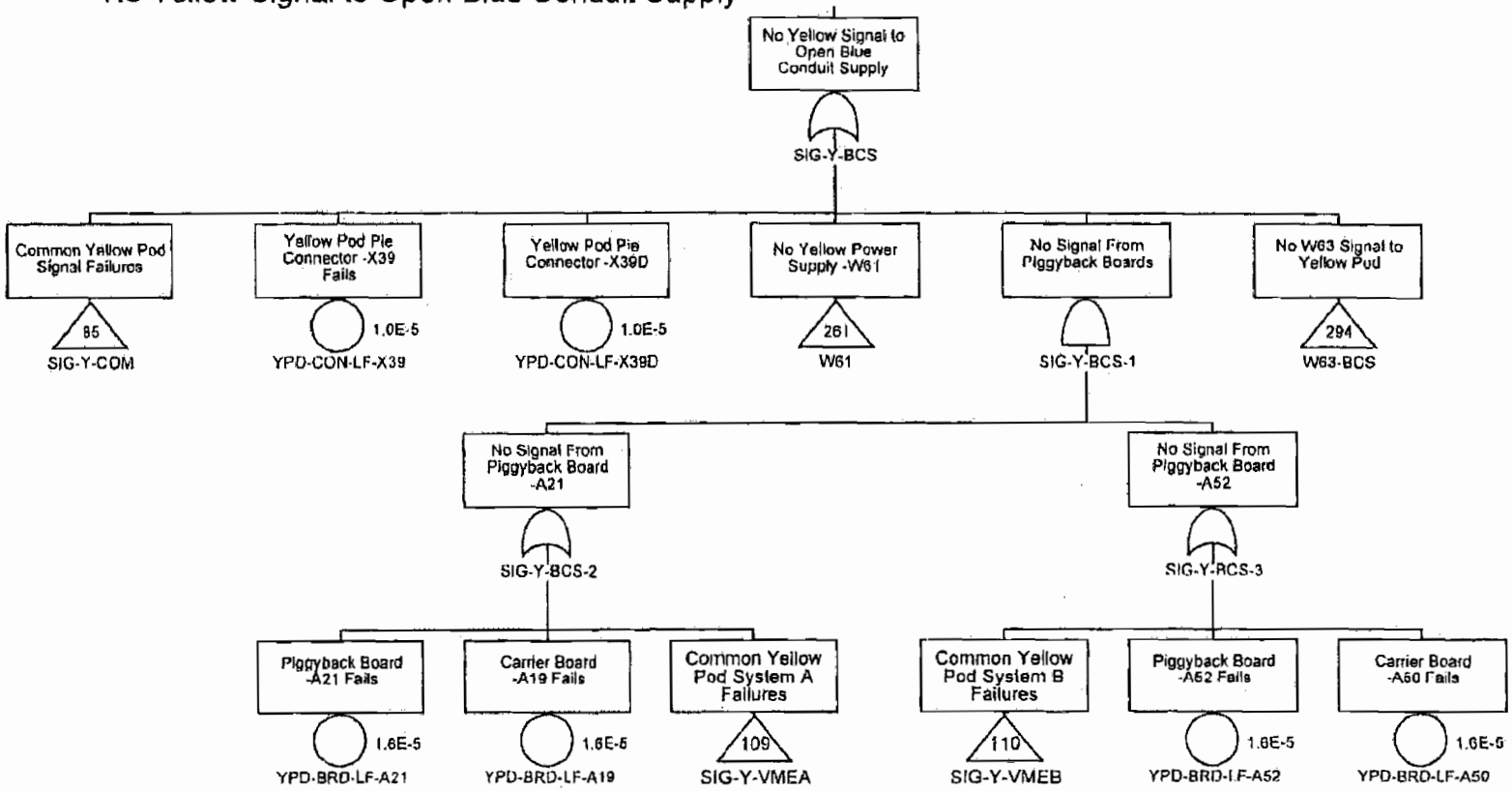

Confidential Treatment Requested by Transocean Holdings LLC

TRN-HCEC-00056526

No Yellow Signal to Open Blue Hot Line Supply

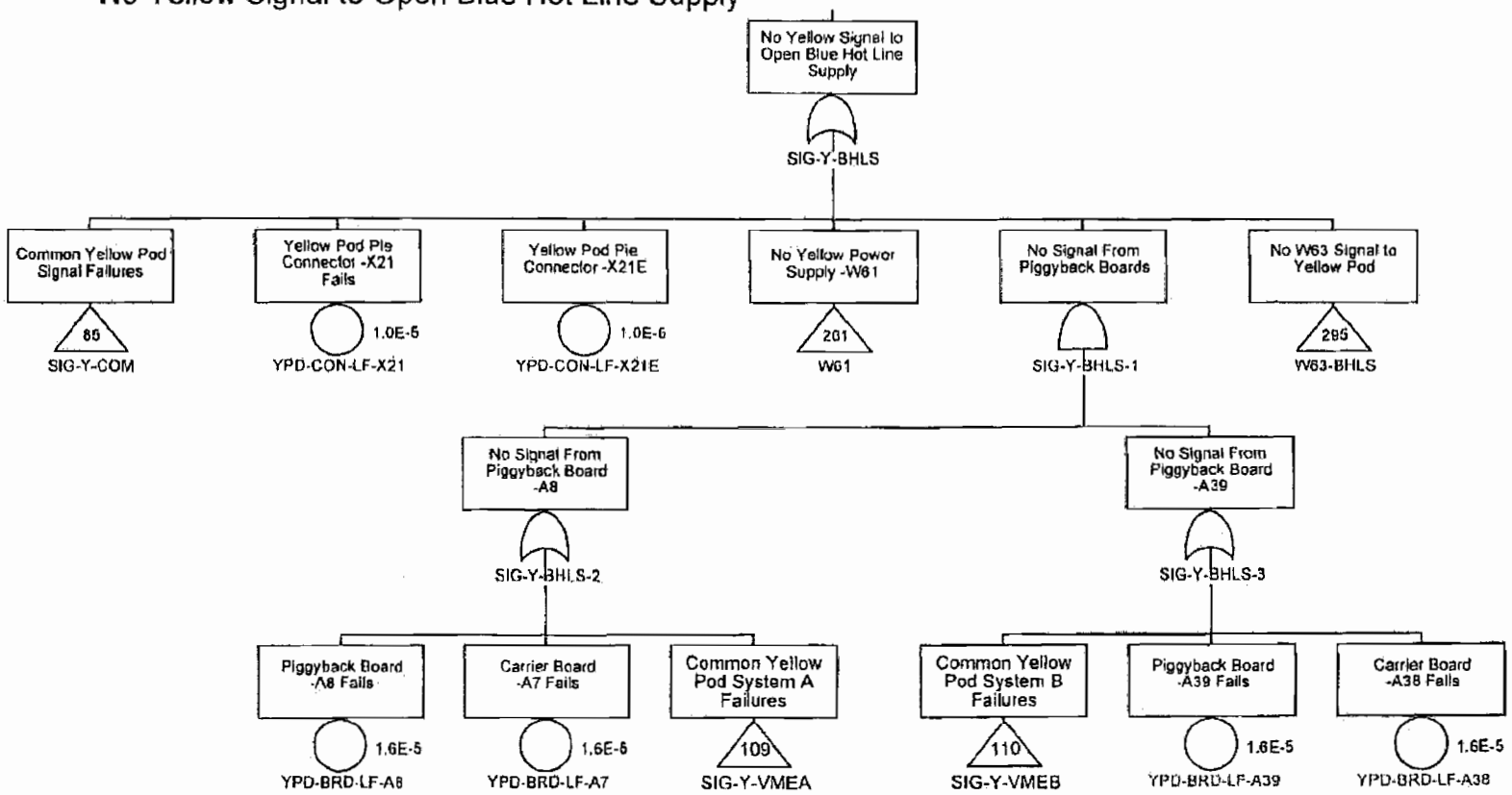

Confidential Treatment Requested by Transocean Holdings LLC

TRN-HCEC-00056527

No Yellow Signal to Close Casing Shear Ram - High Pressure

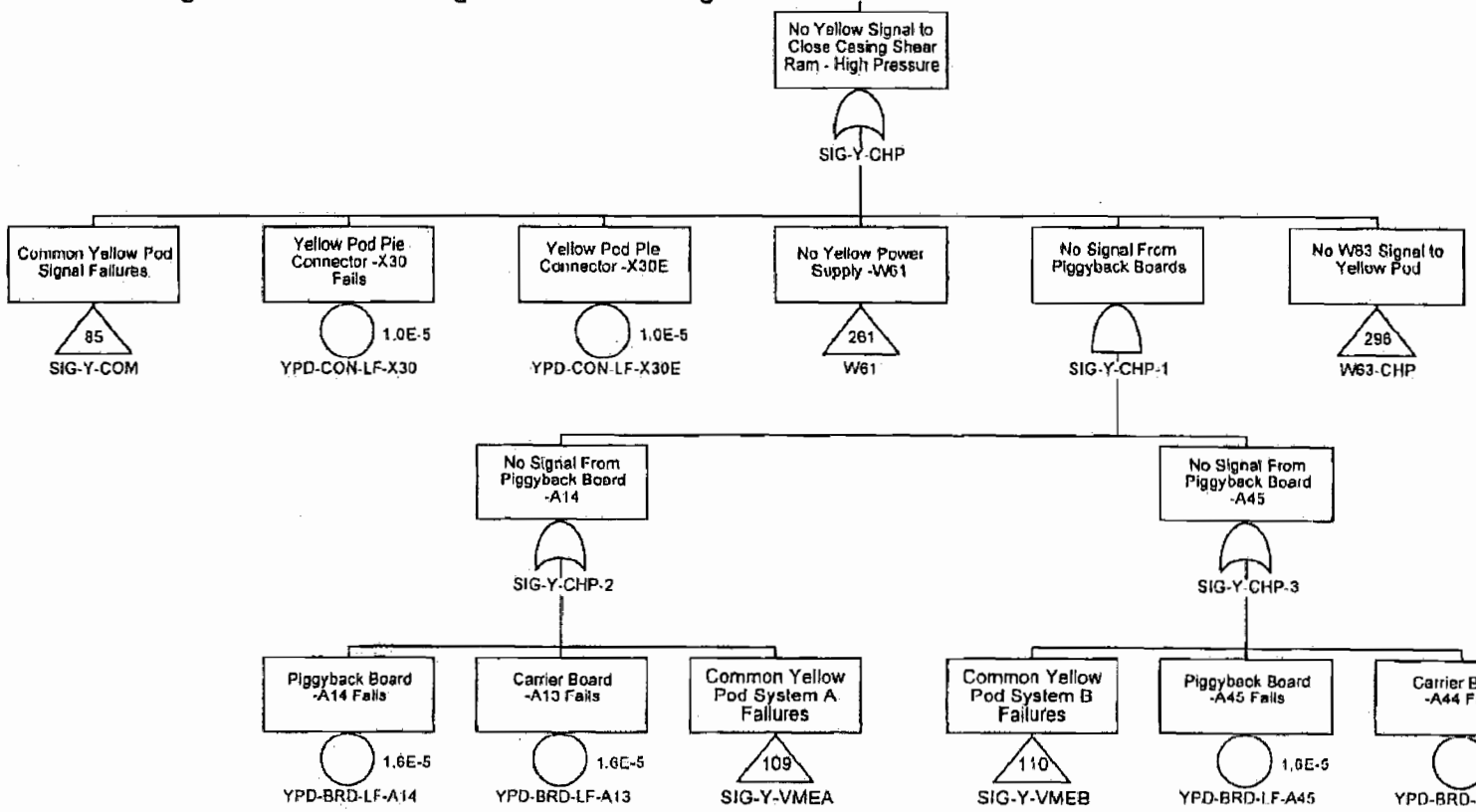

Confidential Treatment Requested by Transocean Holdings LLC

TRN-HCEC-00056528

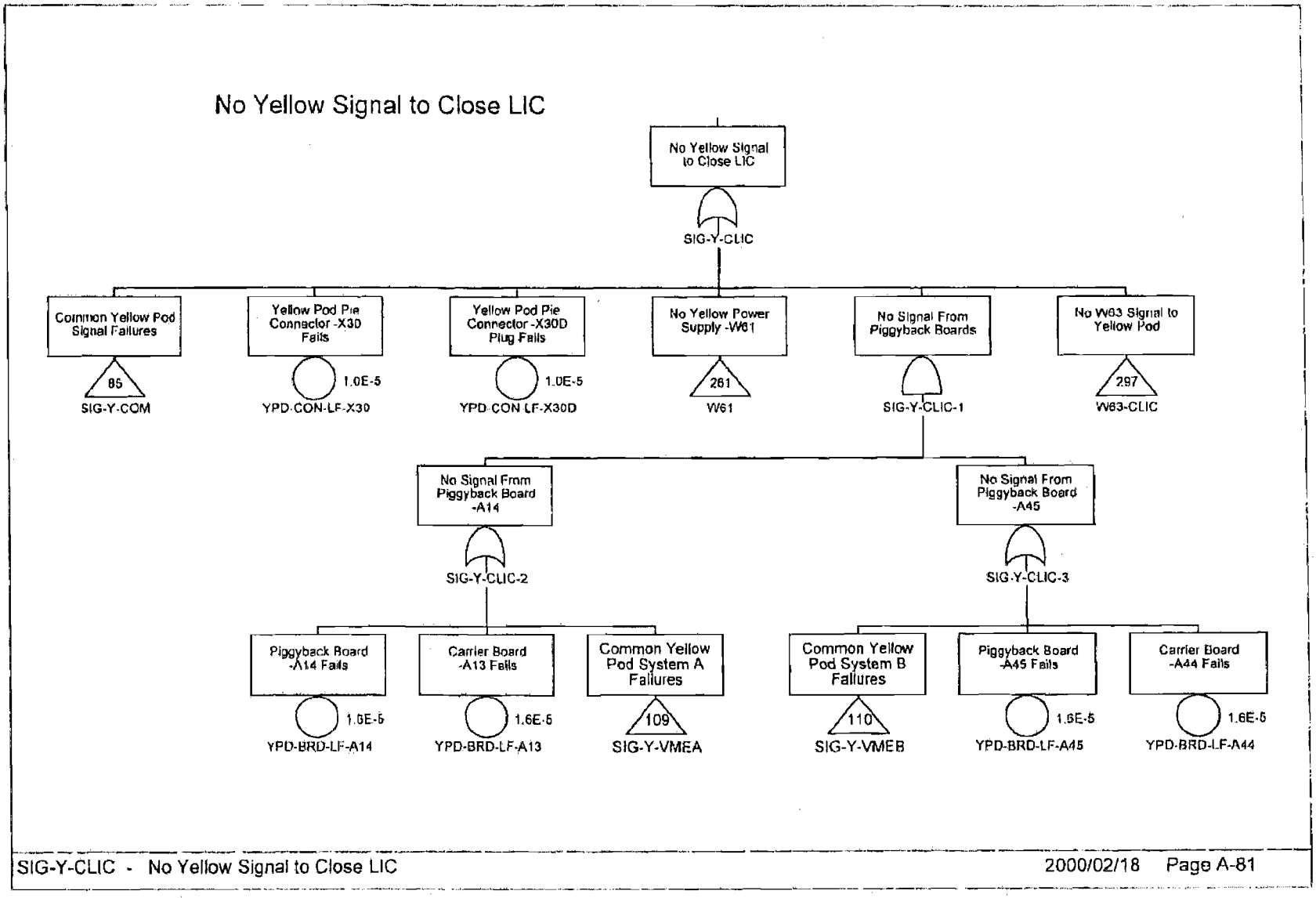

Confidential Treatment Requested by Transocean Holdings LLC

TRN-HCEC-00056529

No Yellow Signal to Close Lower Inner Kill Valve

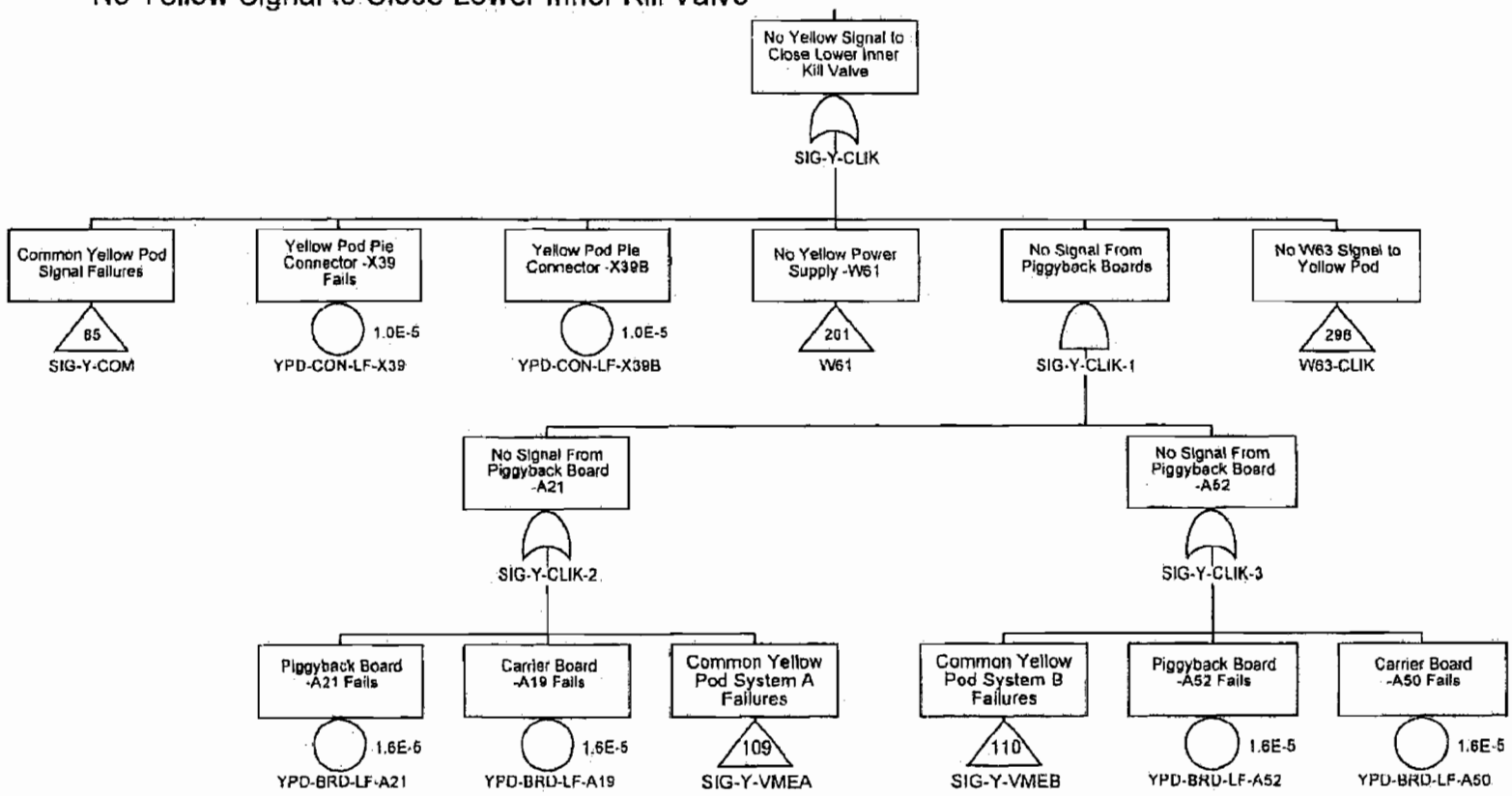

Confidential Treatment Requested by Transocean Holdings LLC

TRN-HCEC-00056530

No Yellow Signal to Close Lower Outer Choke Valve

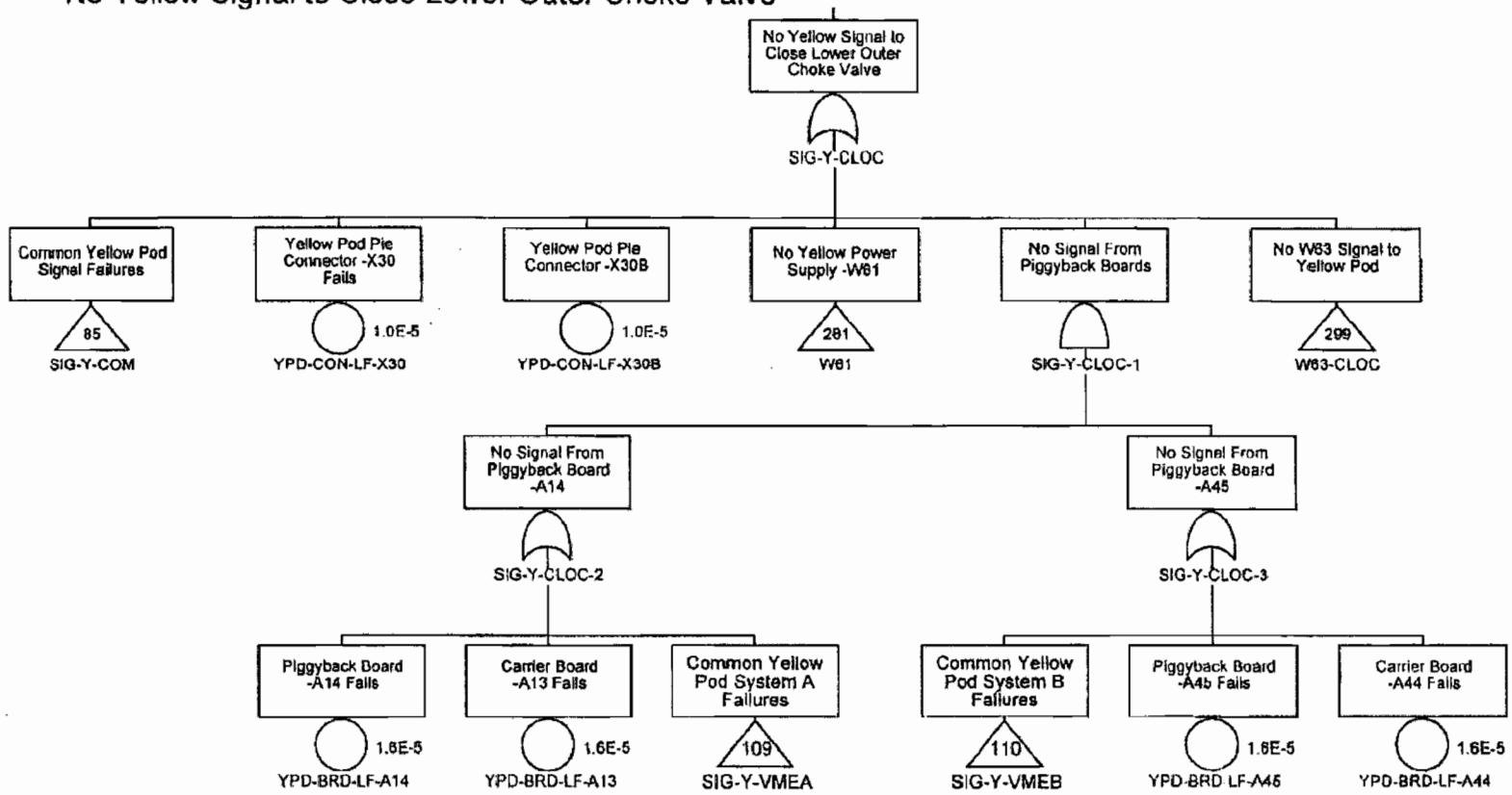

Confidential Treatment Requested by Transocean Holdings LLC

TRN-HCEC-00056531

No Yellow Signal to Close Lower Outer Kill Valve

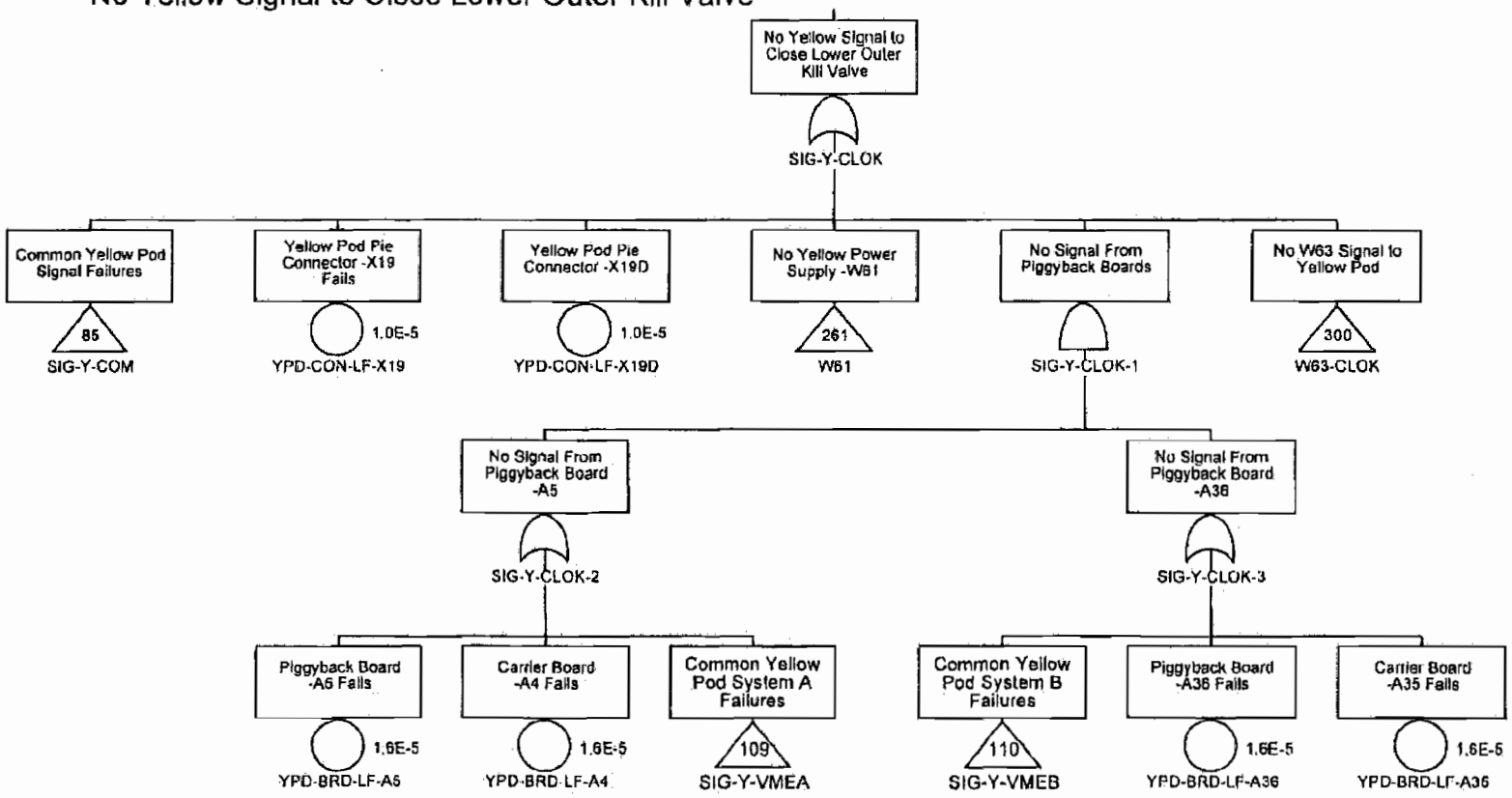

Confidential Treatment Requested by Transocean Holdings LLC

TRN-HCEC-00056532

Common Yellow Pod Signal Failures

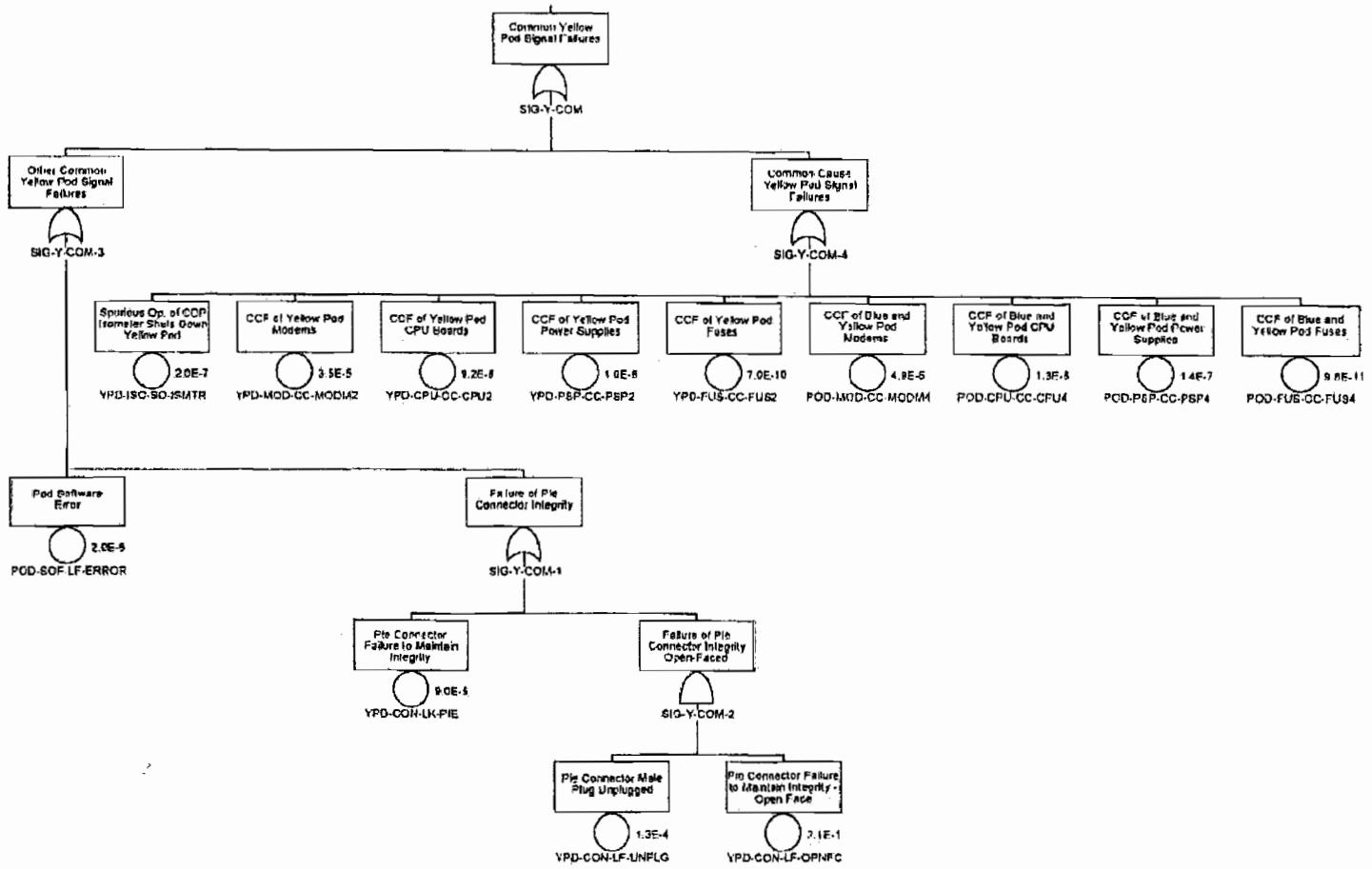

Confidential Treatment Requested by Transocean Holdings LLC

TRN-HCEC-00056533

No Yellow Signal to Close Casing Shear Ram

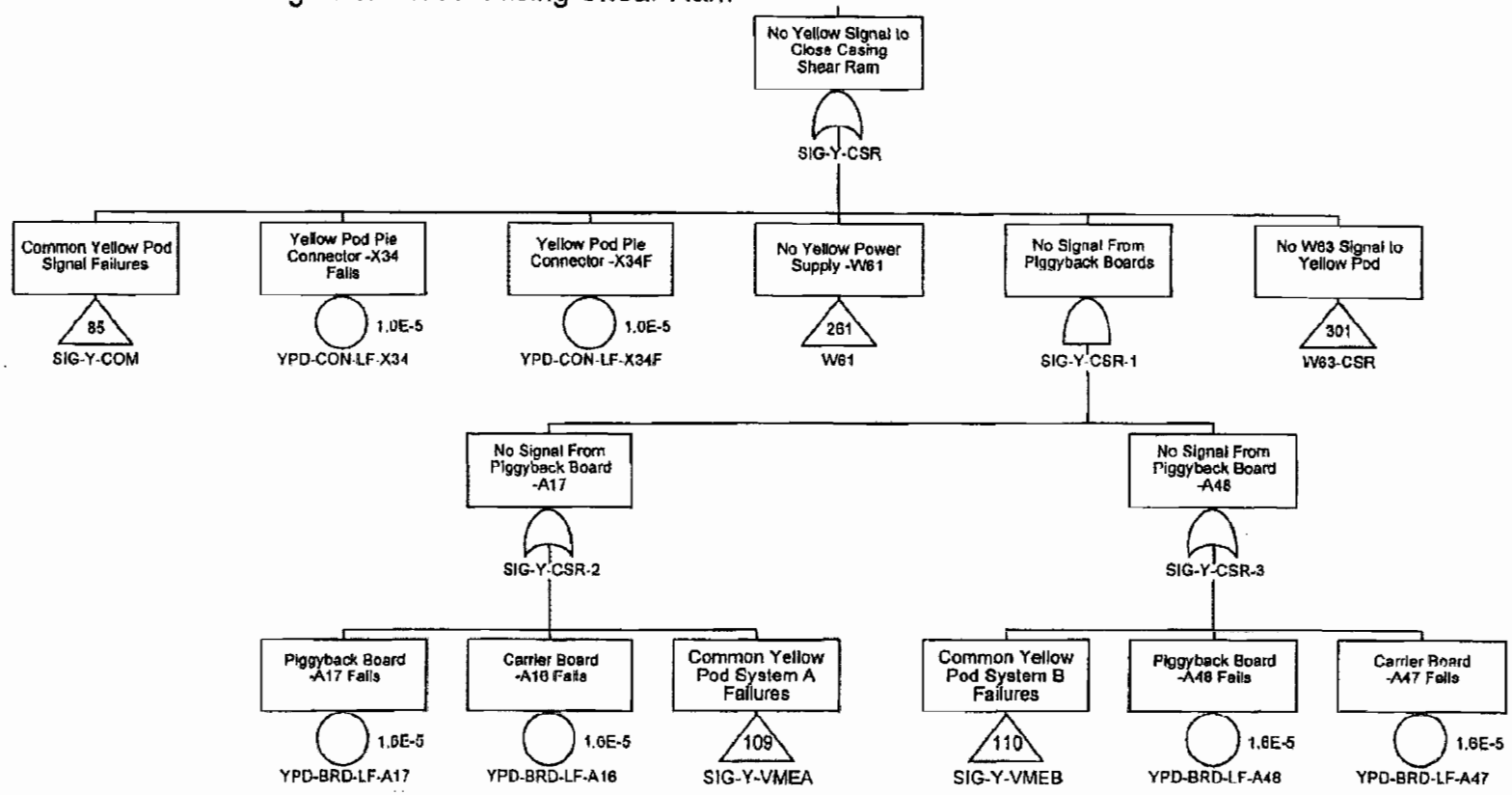

Confidential Treatment Requested by Transocean Holdings LLC

TRN-HCEC-00056534

No Yellow Signal to Close Upper Inner Choke Valve

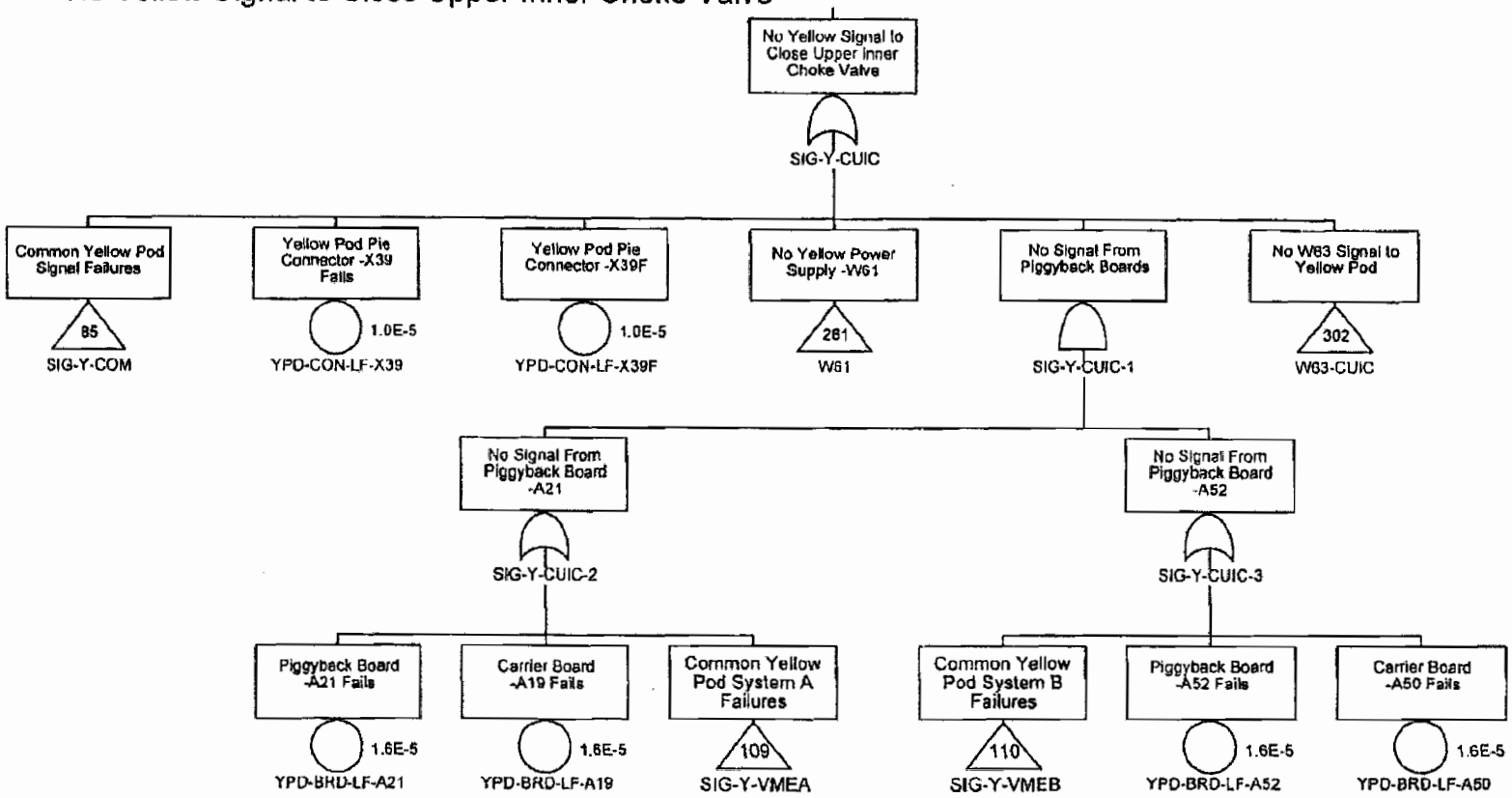

Confidential Treatment Requested by Transocean Holdings LLC

TRN-HCEC-00056535

No Yellow Signal to Close Upper Inner Kill Valve

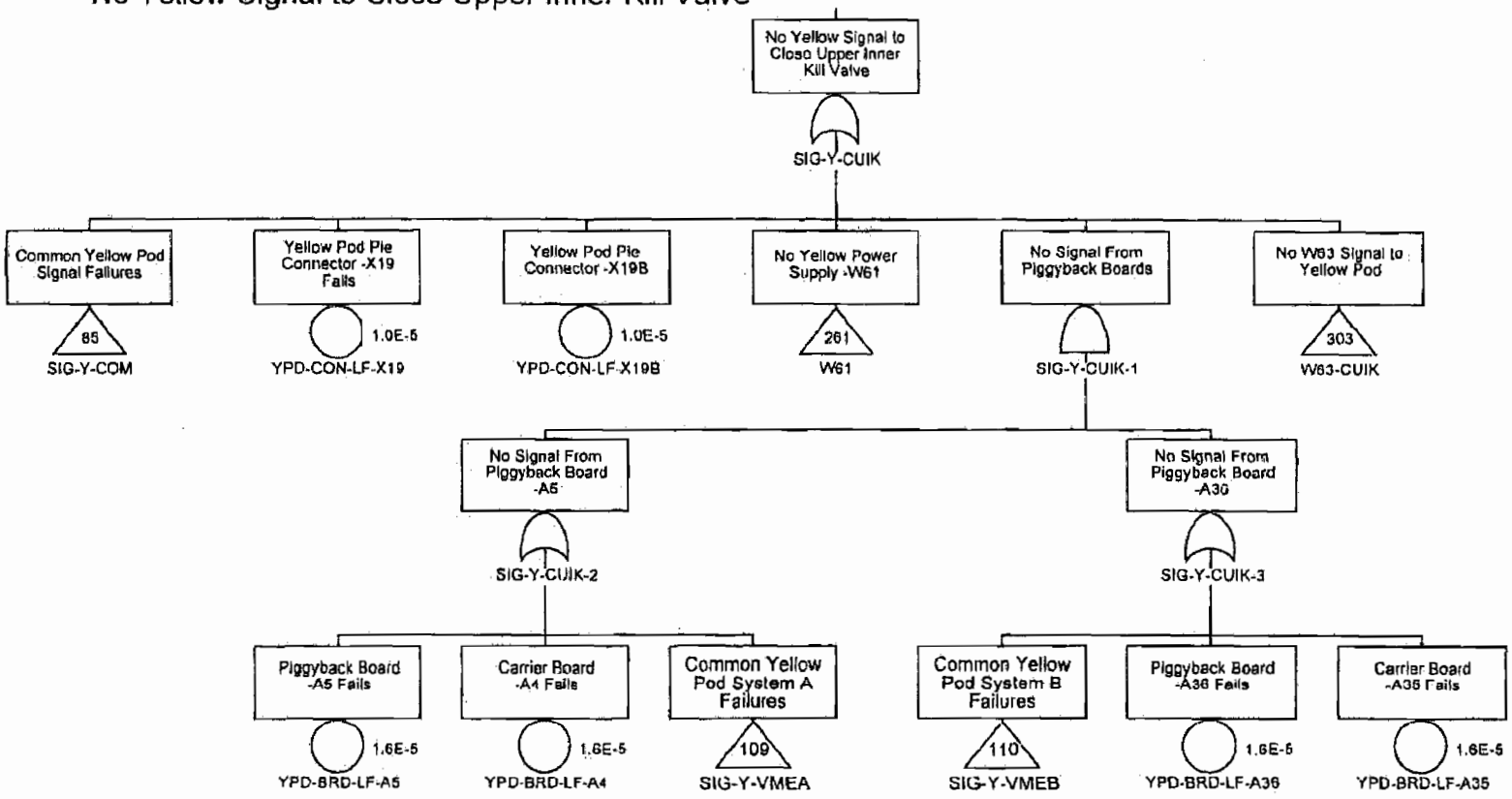

Confidential Treatment Requested by Transocean Holdings LLC

TRN-HCEC-00056536

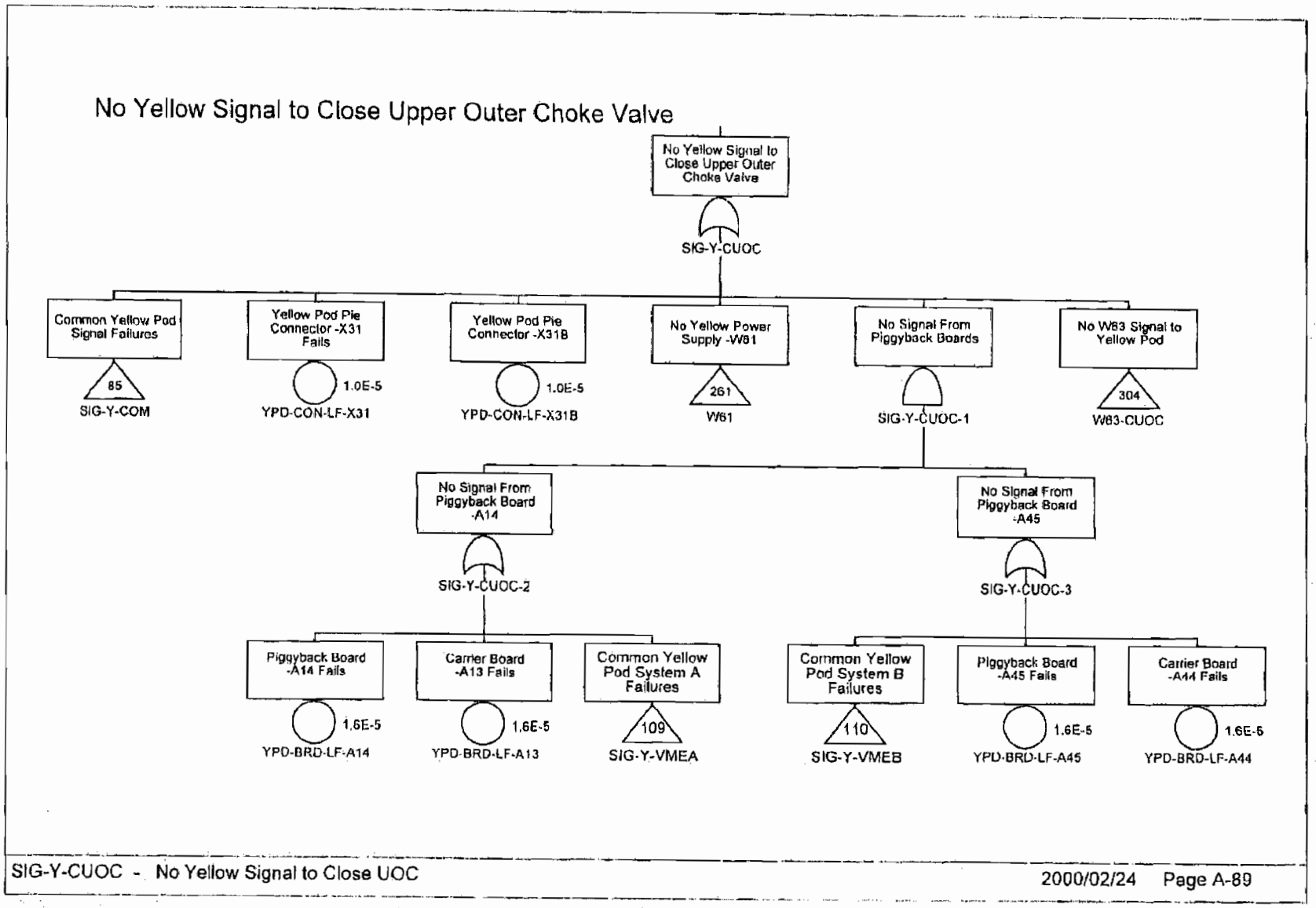

Confidential Treatment Requested by Transocean Holdings LLC

TRN-HCEC-00056537

No Yellow Signal to Close Upper Outer Kill Valve

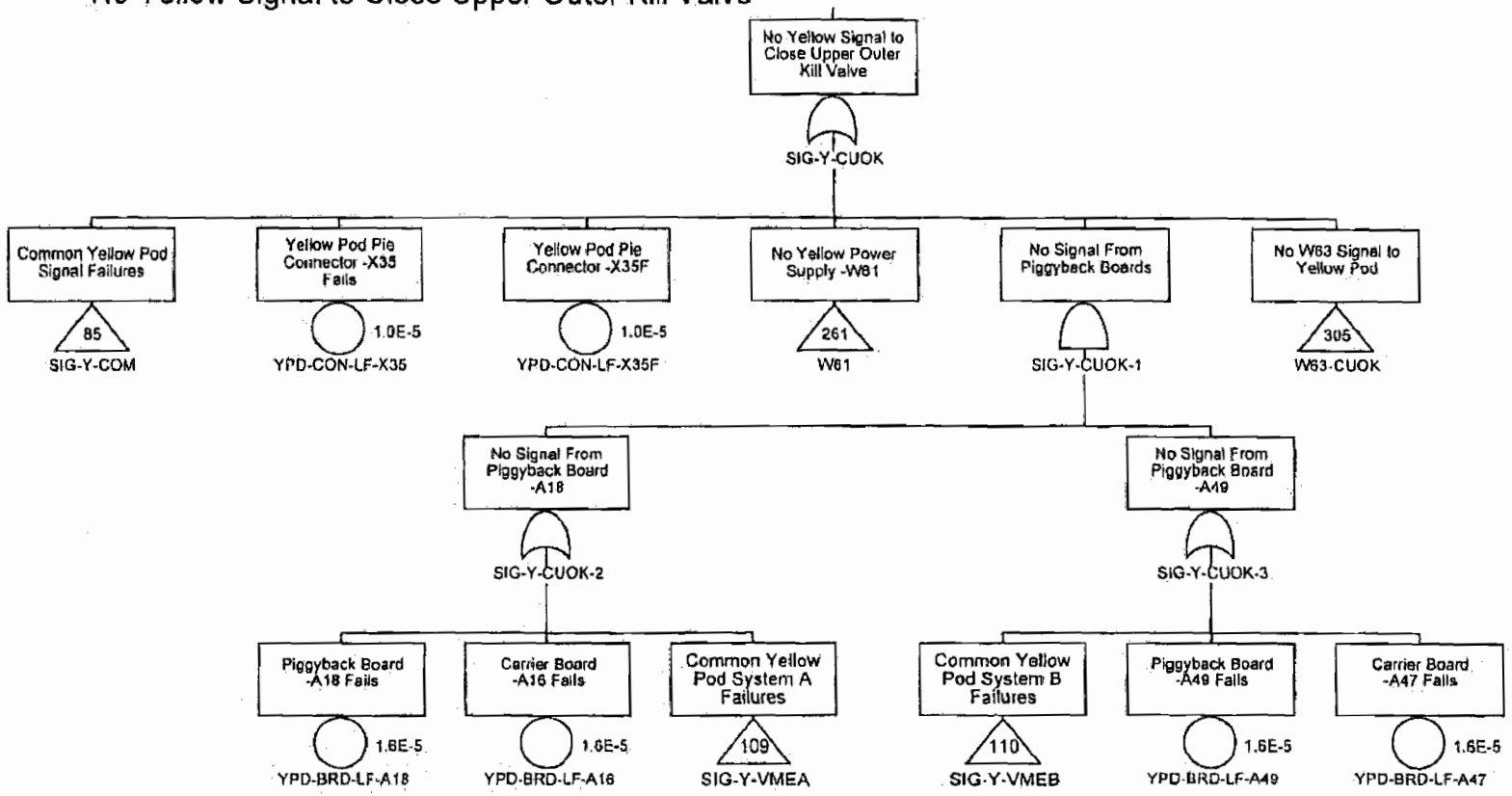

Confidential Treatment Requested by Transocean Holdings LLC

TRN-HCEC-00056538

No Yellow Signal to Close Lower Annular

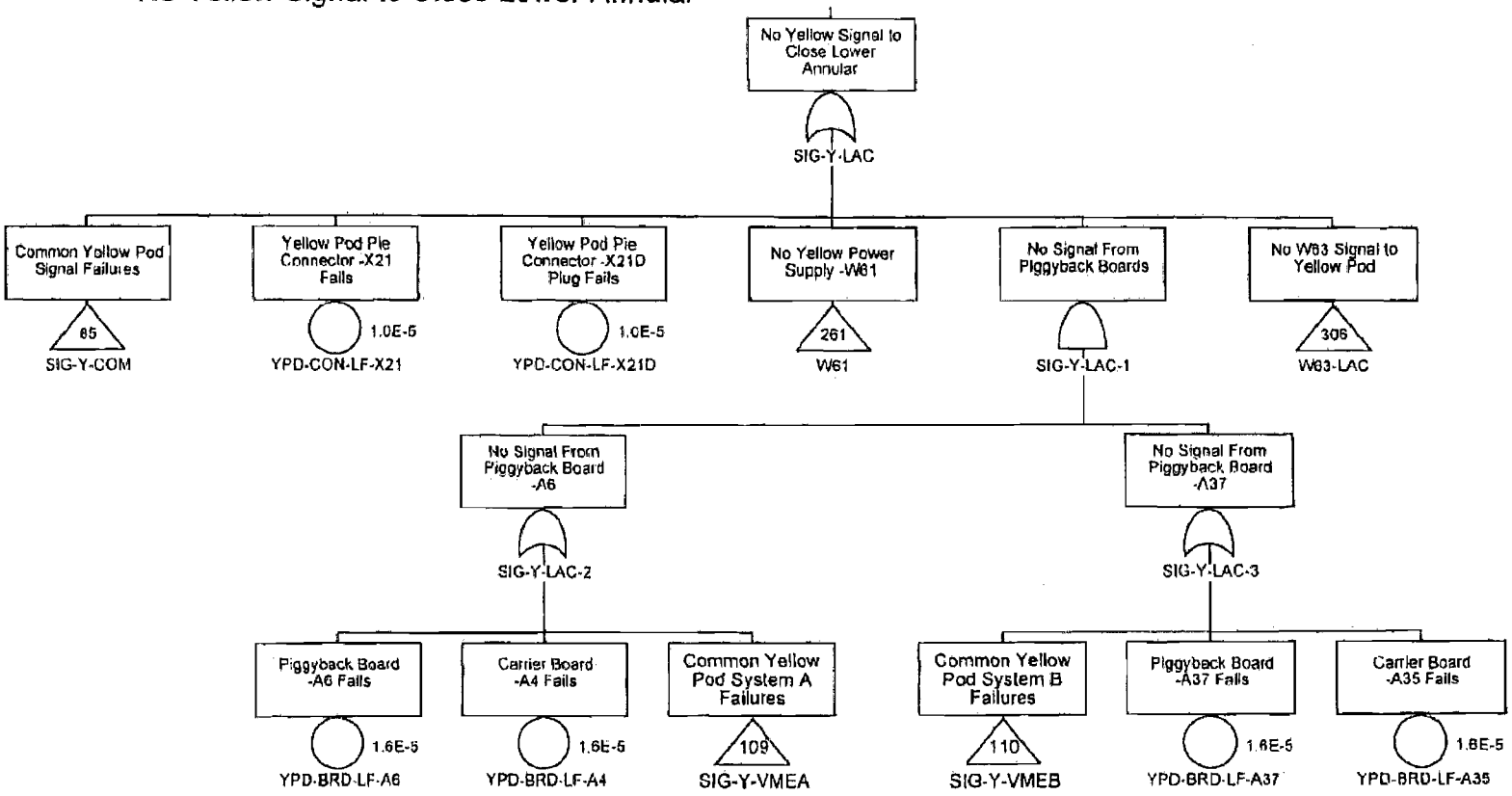

Confidential Treatment Requested by Transocean Holdings LLC

TRN-HCEC-00056539

No Yellow Signal to Close Lower Pipe Ram

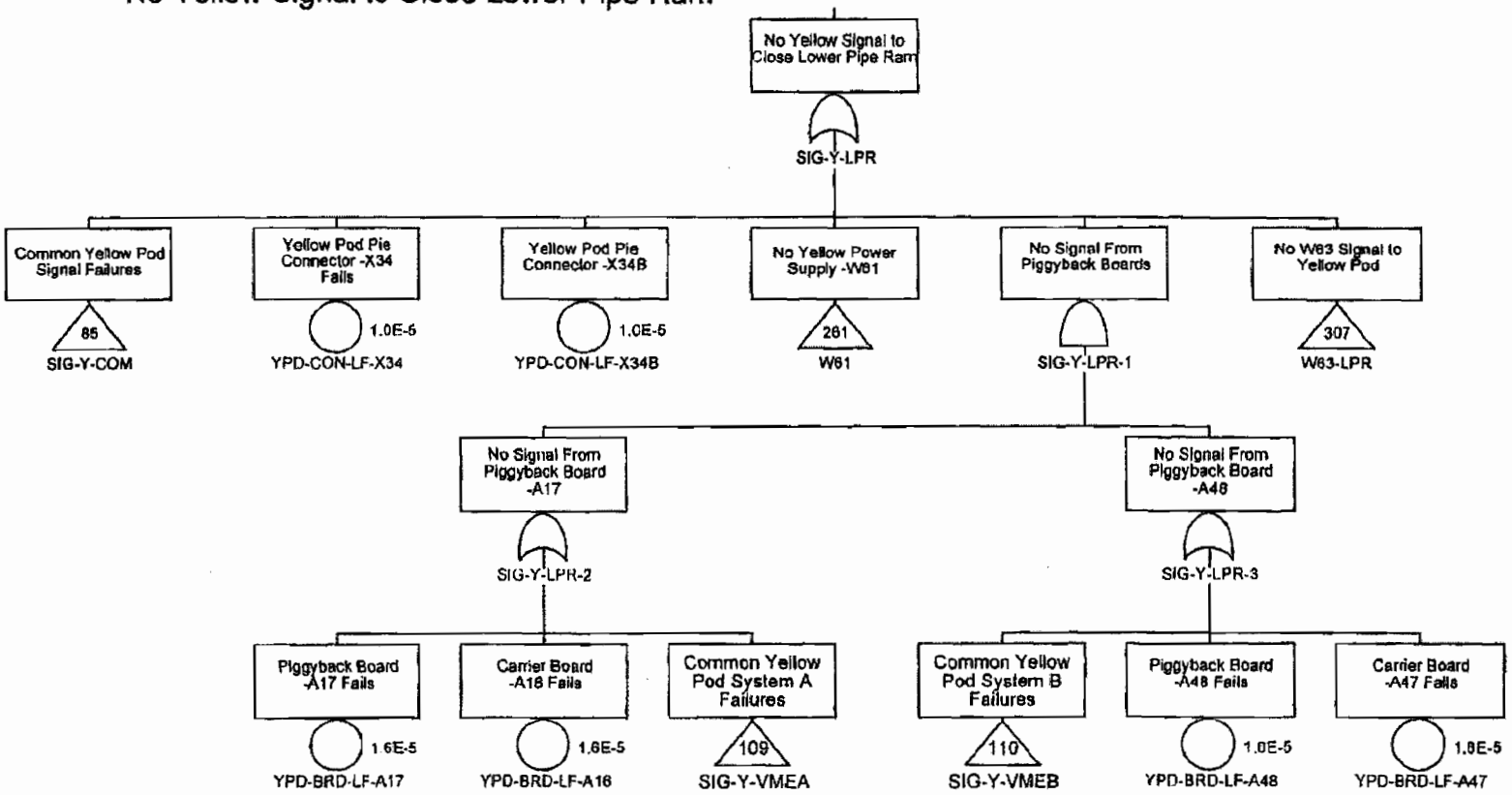

Confidential Treatment Requested by Transocean Holdings LLC

TRN-HCEC-00056540

No Yellow Signal to Close Middle Pipe Ram

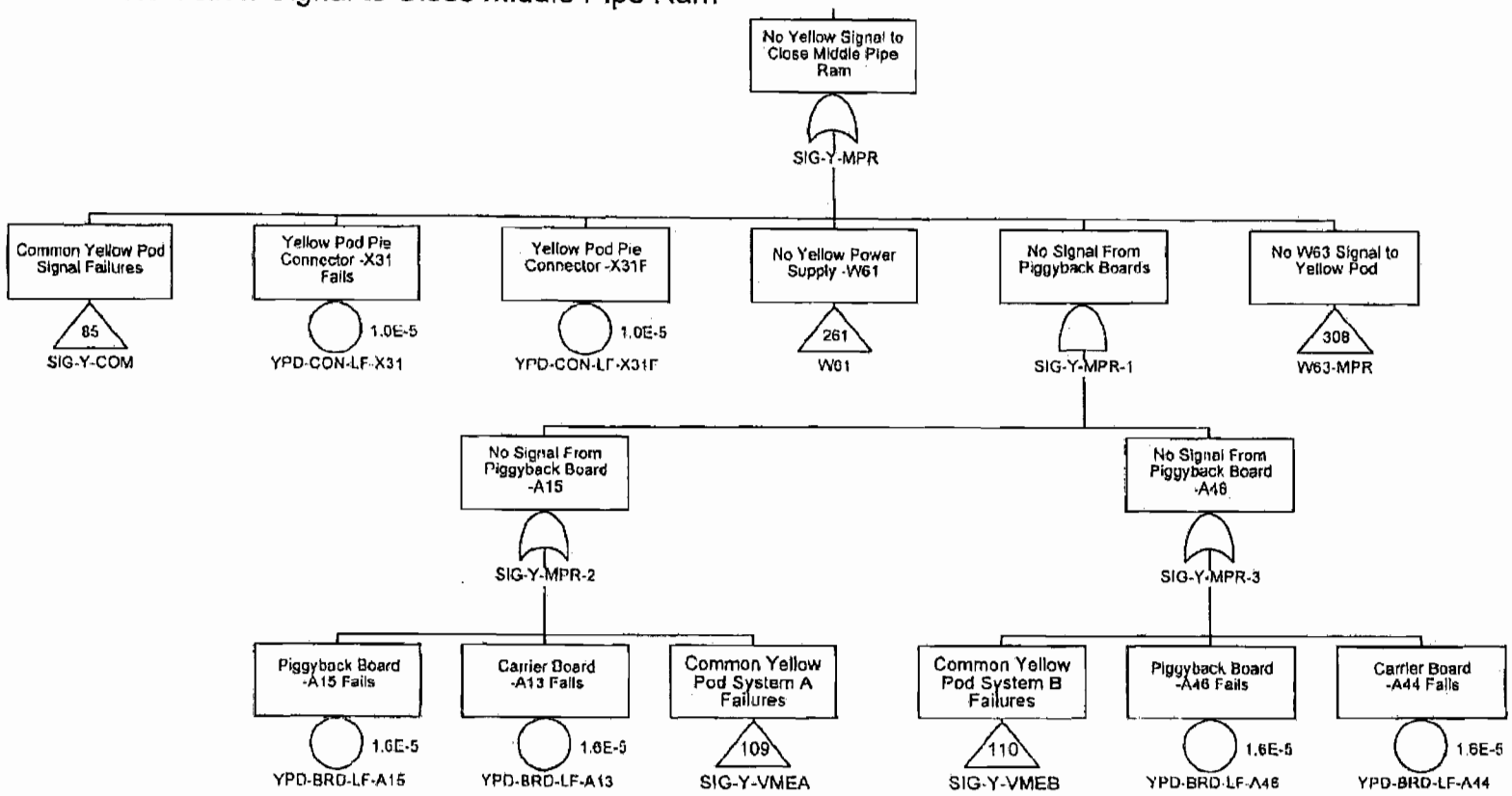

Confidential Treatment Requested by Transocean Holdings LLC

TRN-HCEC-00056541

No Yellow Signal to Open Lower Inner Choke Valve

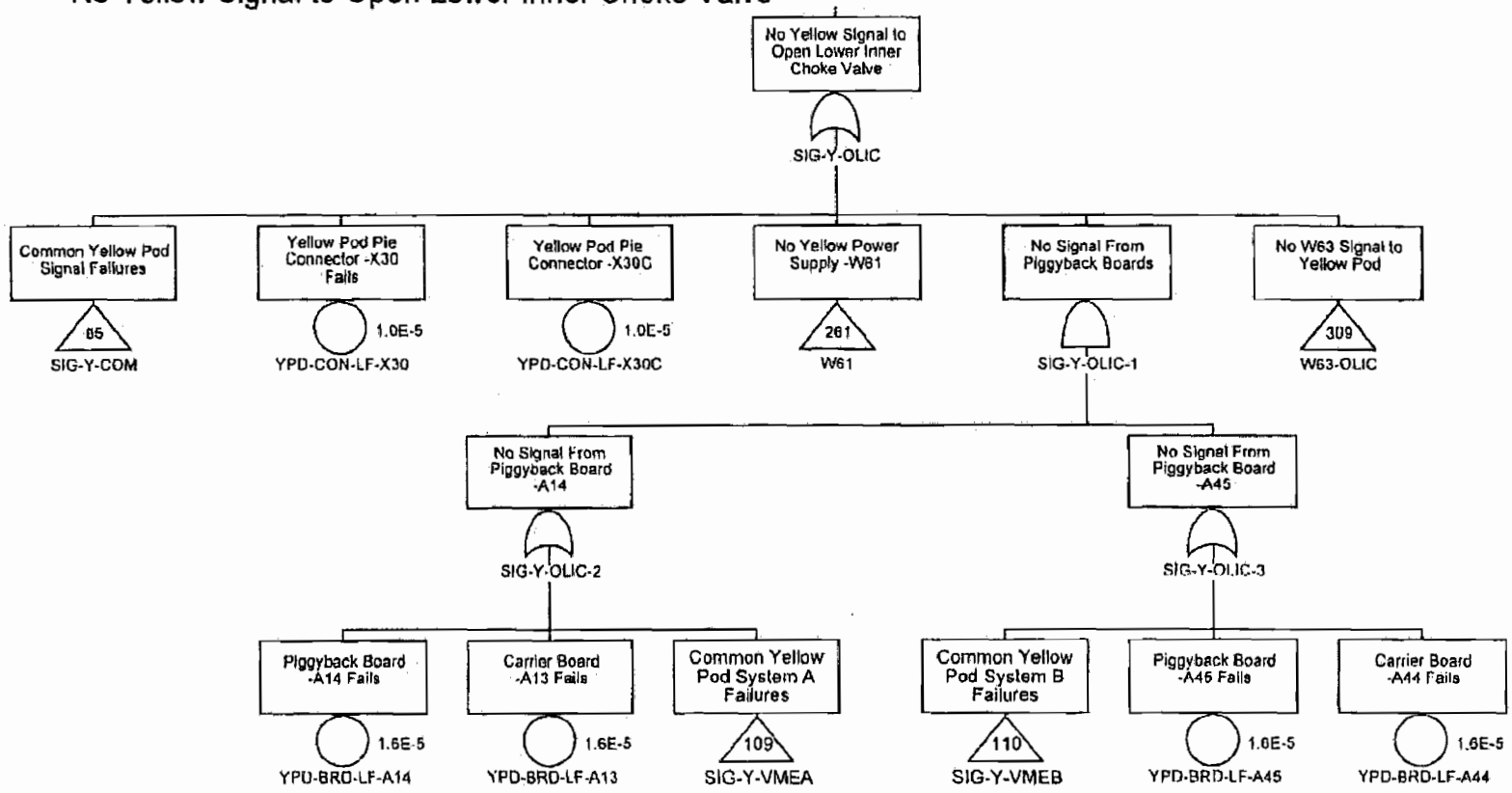

Confidential Treatment Requested by Transocean Holdings LLC

TRN-HCEC-00056542

No Yellow Signal to Open Lower Inner Kill Valve

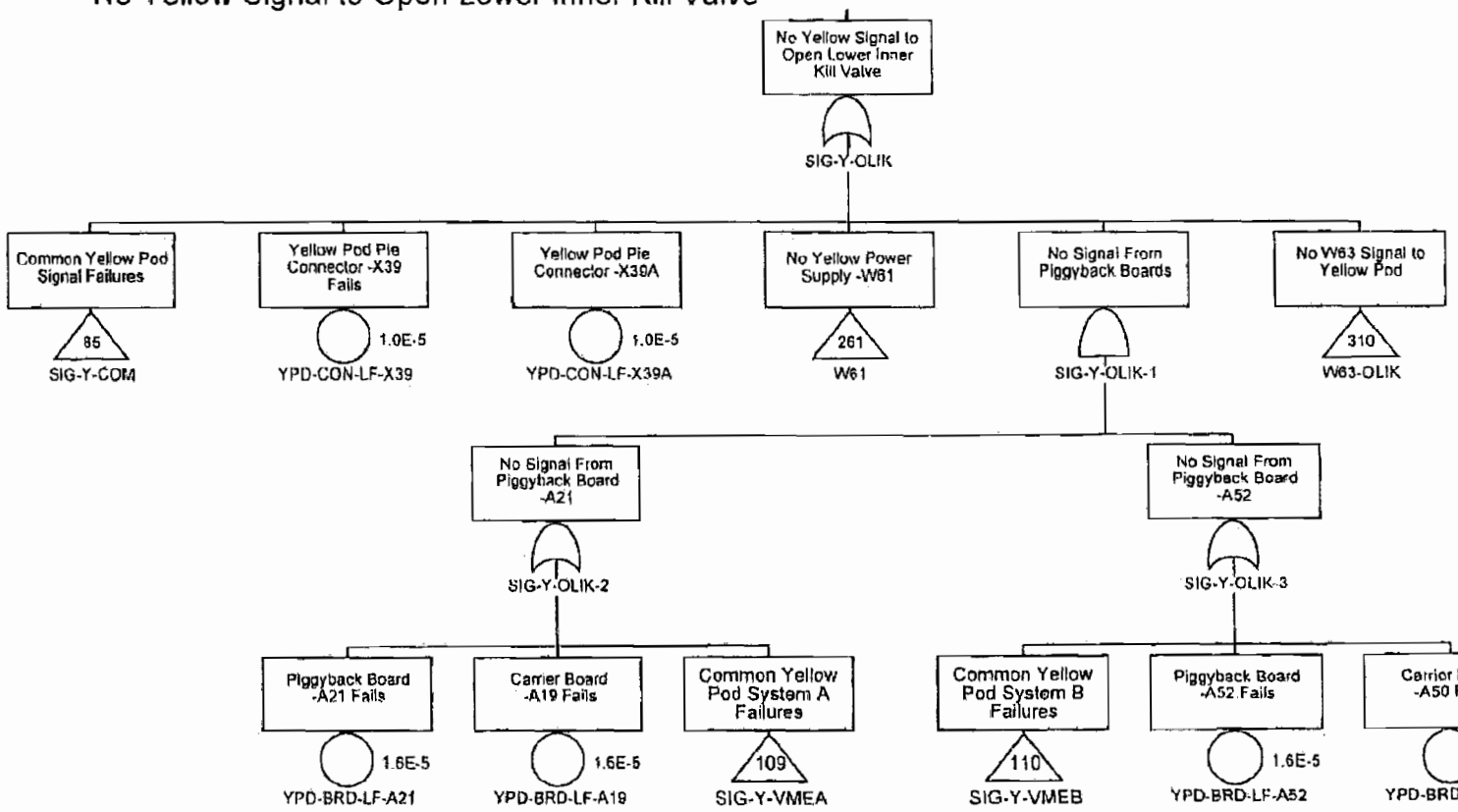

Confidential Treatment Requested by Transocean Holdings LLC

TRN-HCEC-00056543

No Yellow Signal to Open Lower Outer Choke Valve

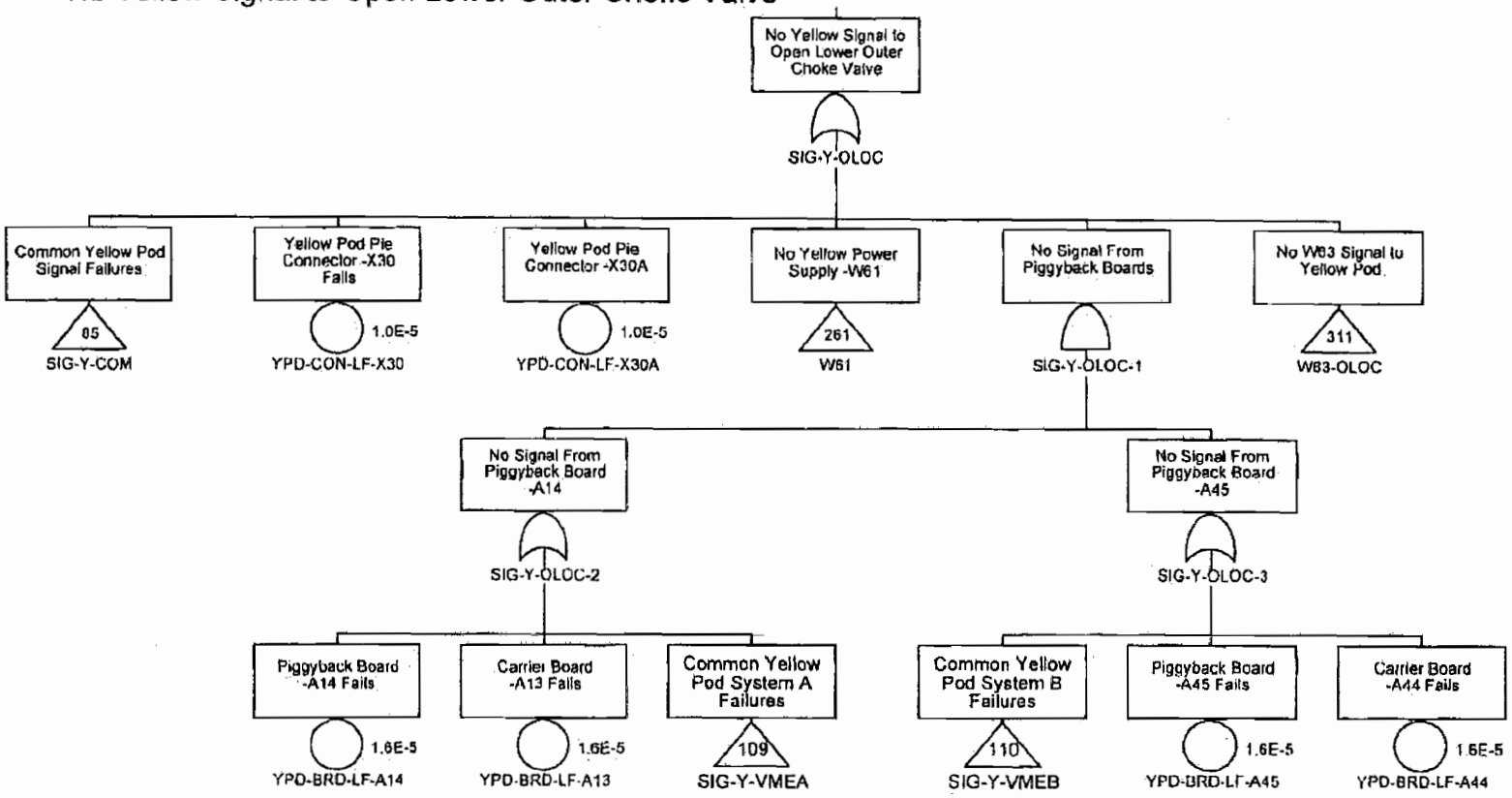

Confidential Treatment Requested by Transocean Holdings LLC

TRN-HCEC-00056544

No Yellow Signal to Open Lower Outer Kill Valve

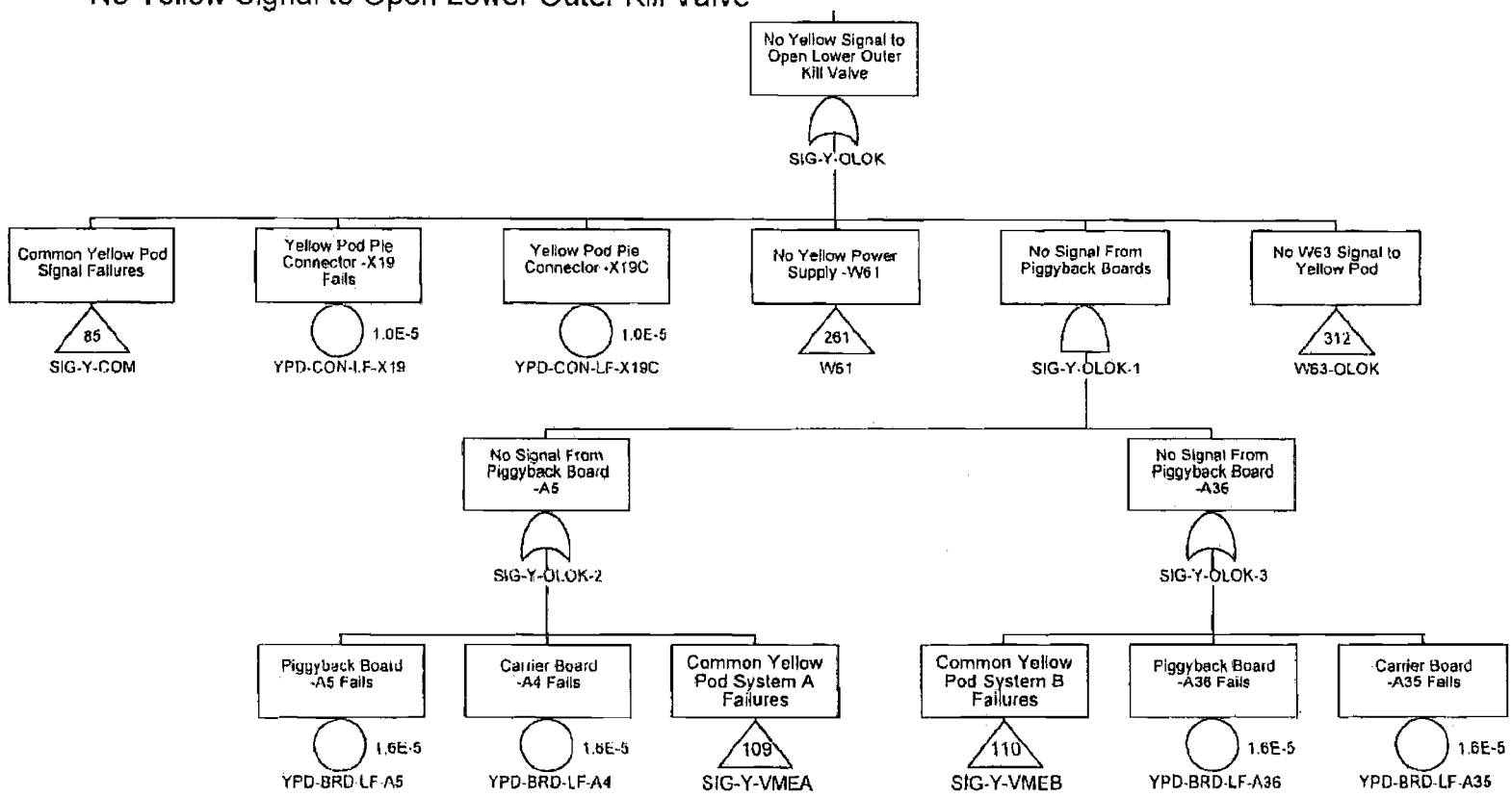

Confidential Treatment Requested by Transocean Holdings LLC

TRN-HCEC-00056545

No Yellow Signal to Open Upper Inner Choke Valve

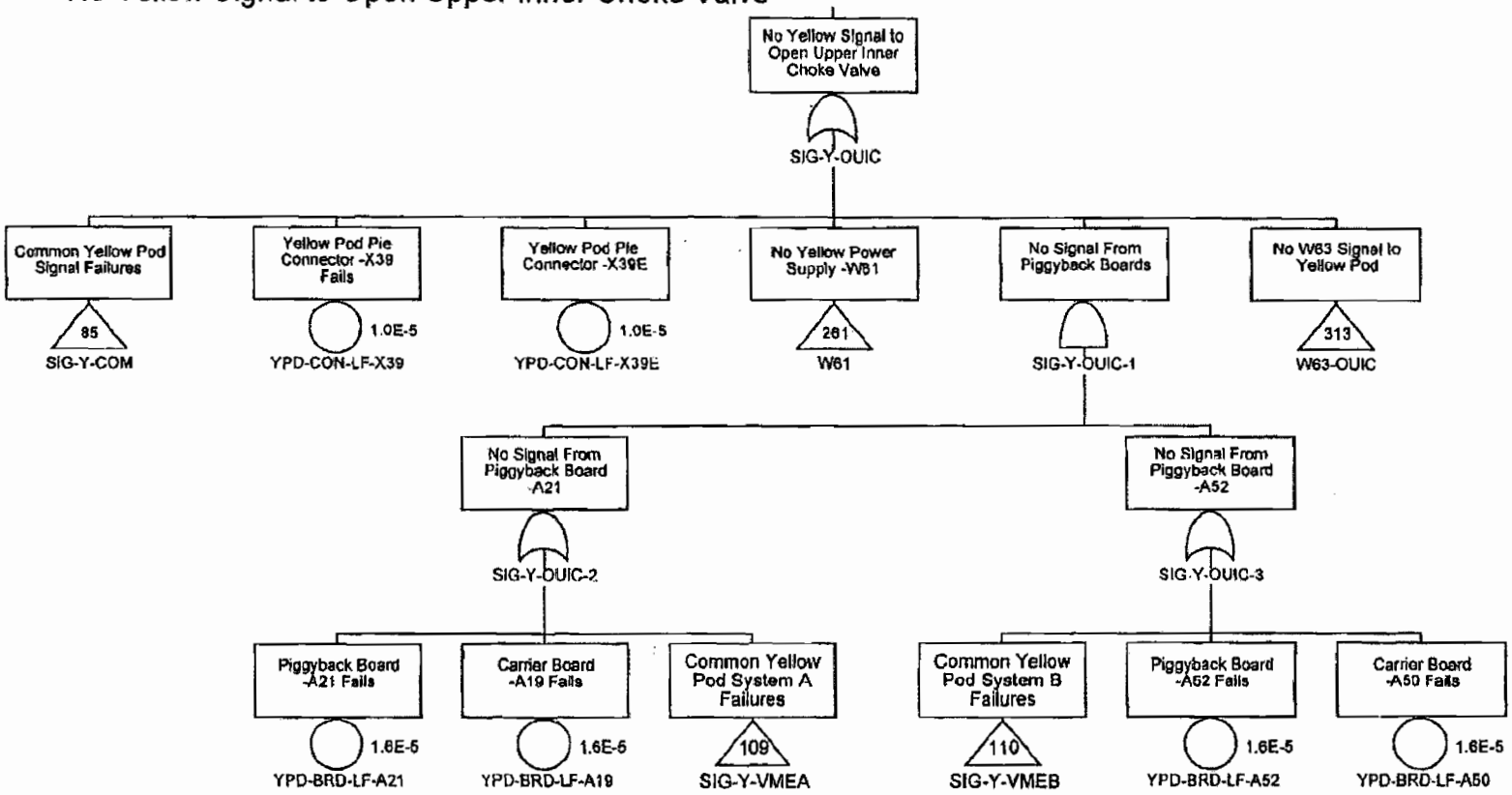

Confidential Treatment Requested by Transocean Holdings LLC

TRN-HCEC-00056546

No Yellow Signal to Open Upper Inner Kill Valve

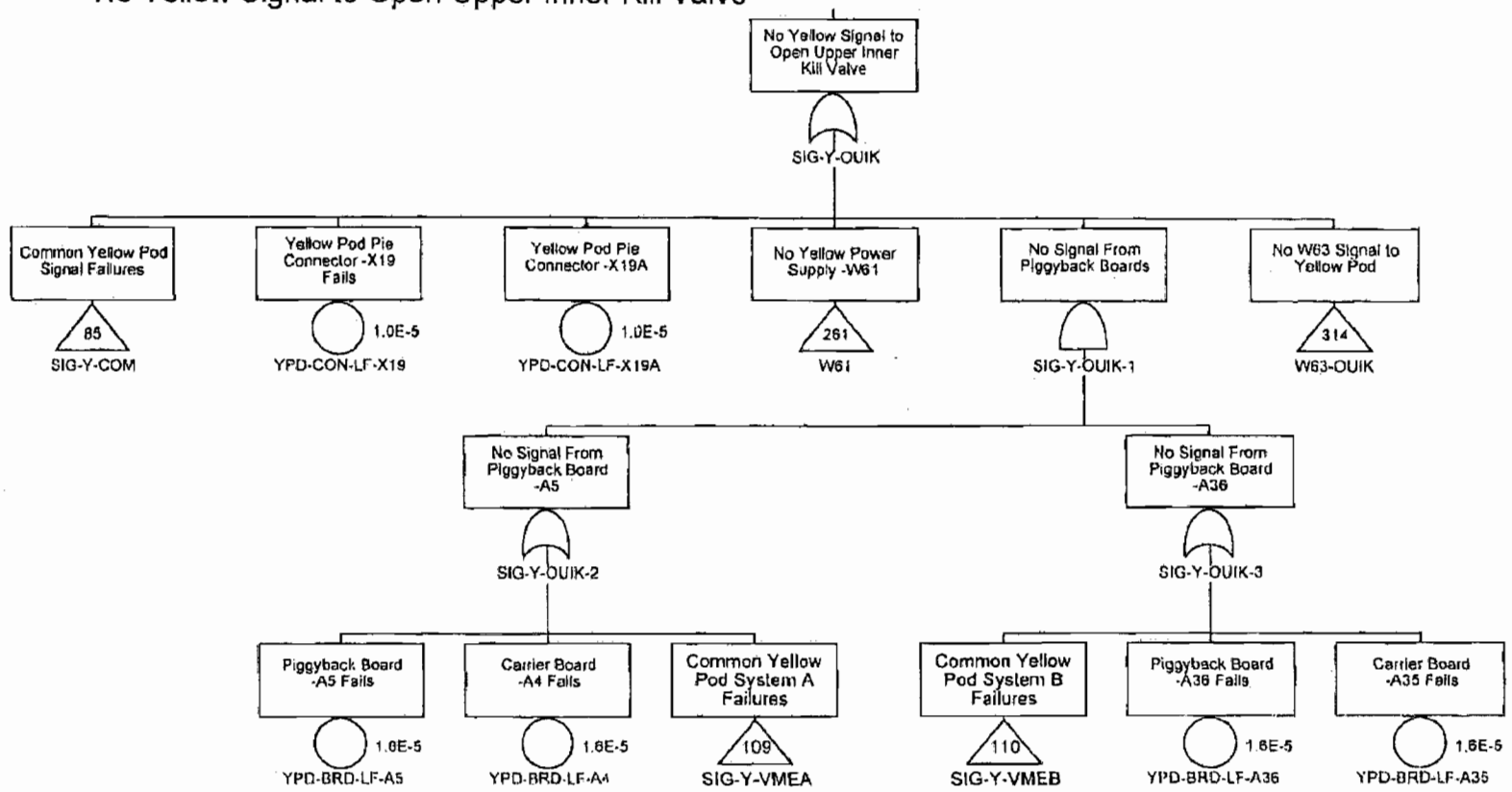

Confidential Treatment Requested by Transocean Holdings LLC

TRN-HCEC-00056547

No Yellow Signal to Open Upper Outer Choke Valve

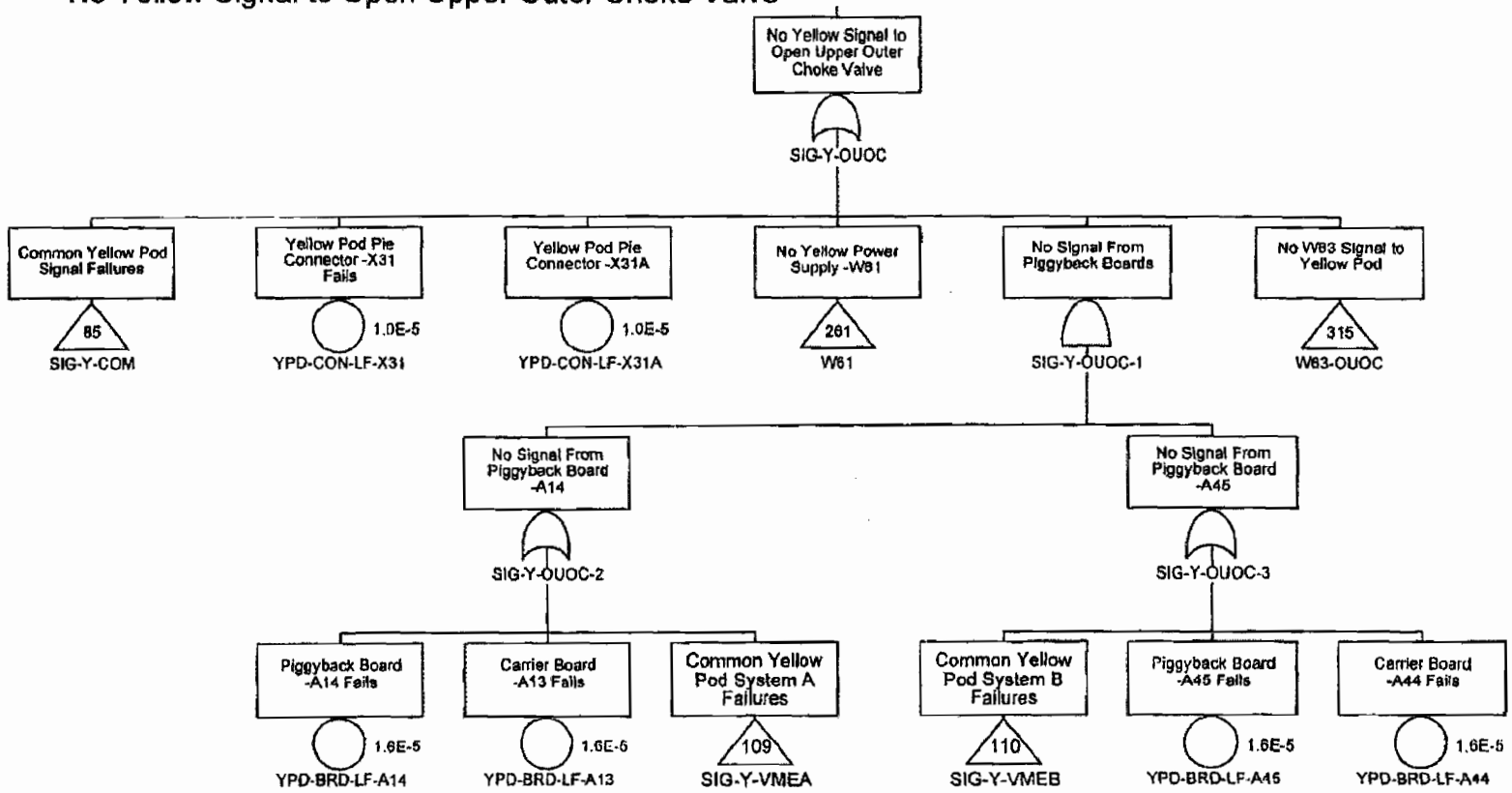

Confidential Treatment Requested by Transocean Holdings LLC

TRN-HCEC-00056548

No Yellow Signal to Open Upper Outer Kill Valve

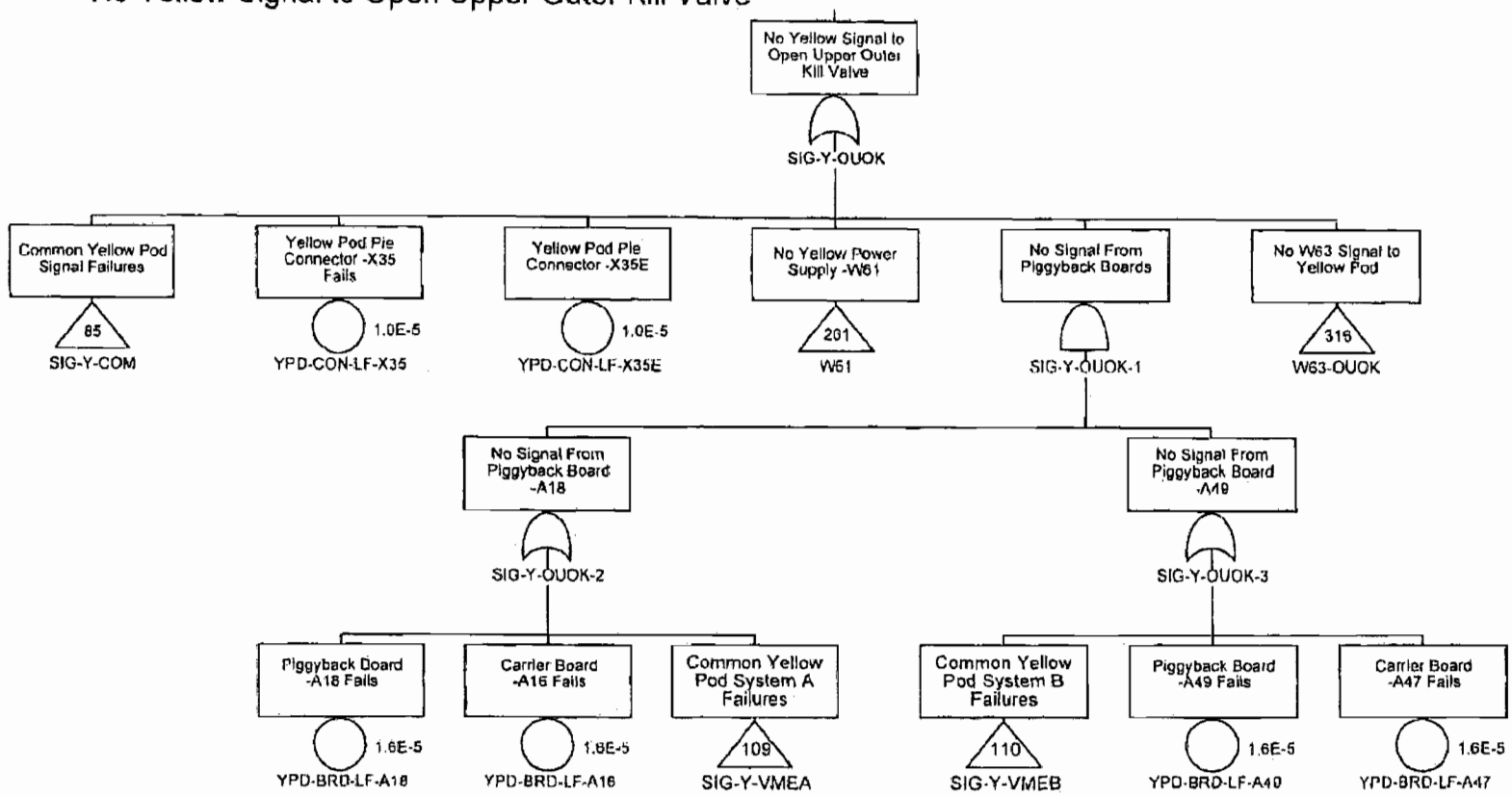

Confidential Treatment Requested by Transocean Holdings LLC

TRN-HCEC-00056549

No Yellow Signal to Unlatch Primary Disconnect

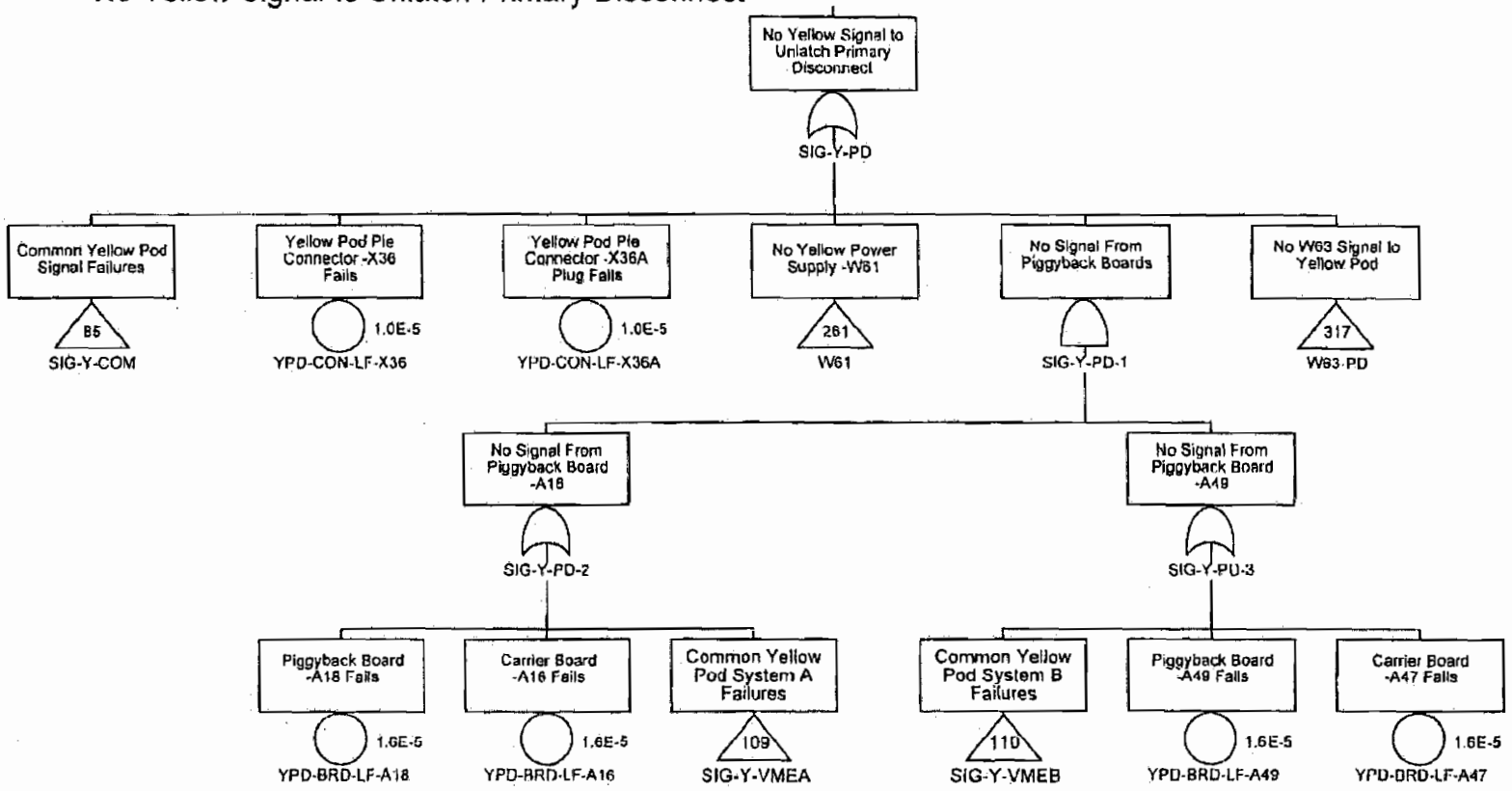

Confidential Treatment Requested by Transocean Holdings LLC

TRN-HCEC-00056550

No Yellow Signal to Open Pod Select Valve

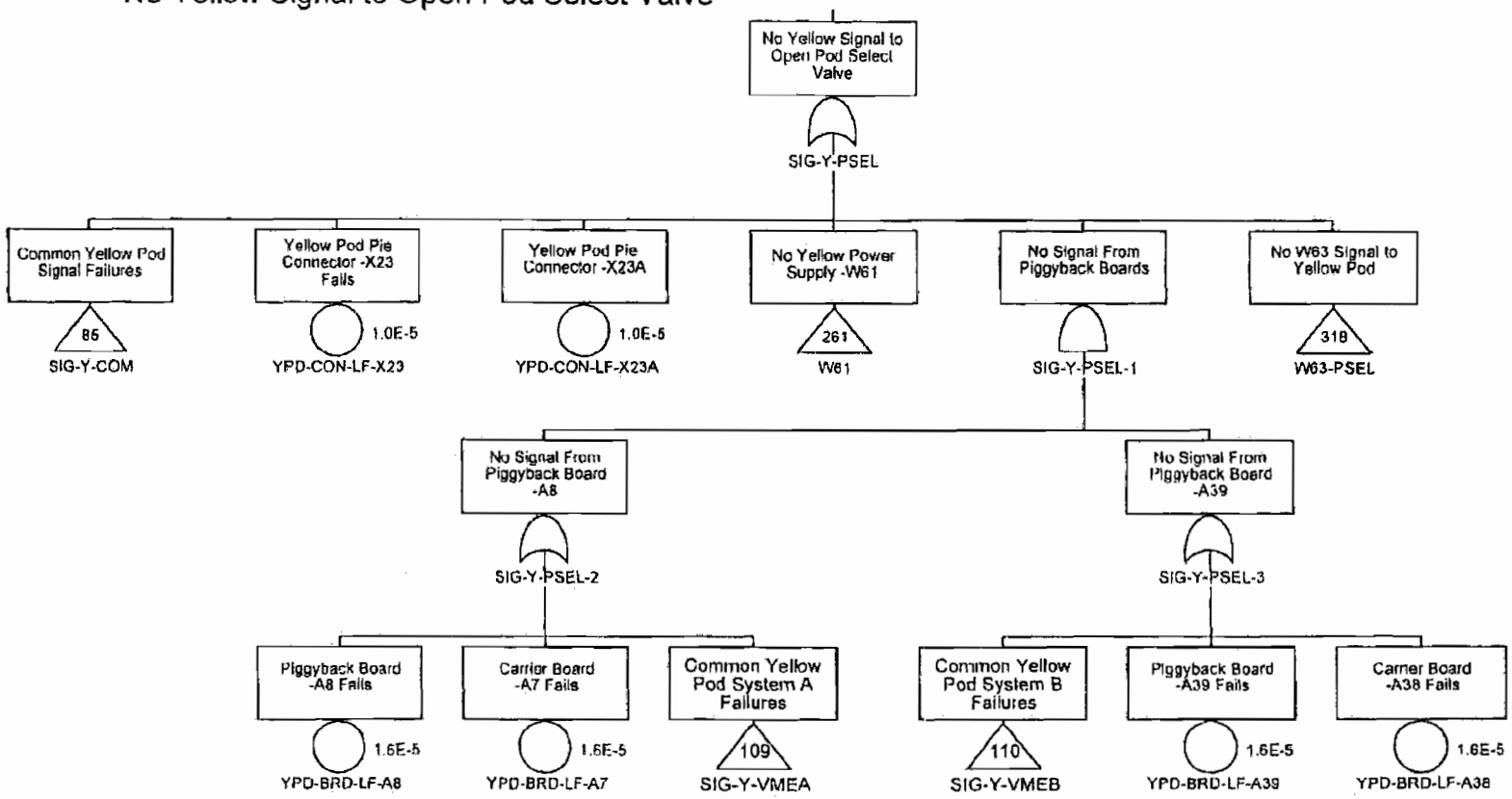

Confidential Treatment Requested by Transocean Holdings LLC

TRN-HCEC-00056551

No Yellow Signal to Unlatch Secondary Disconnect

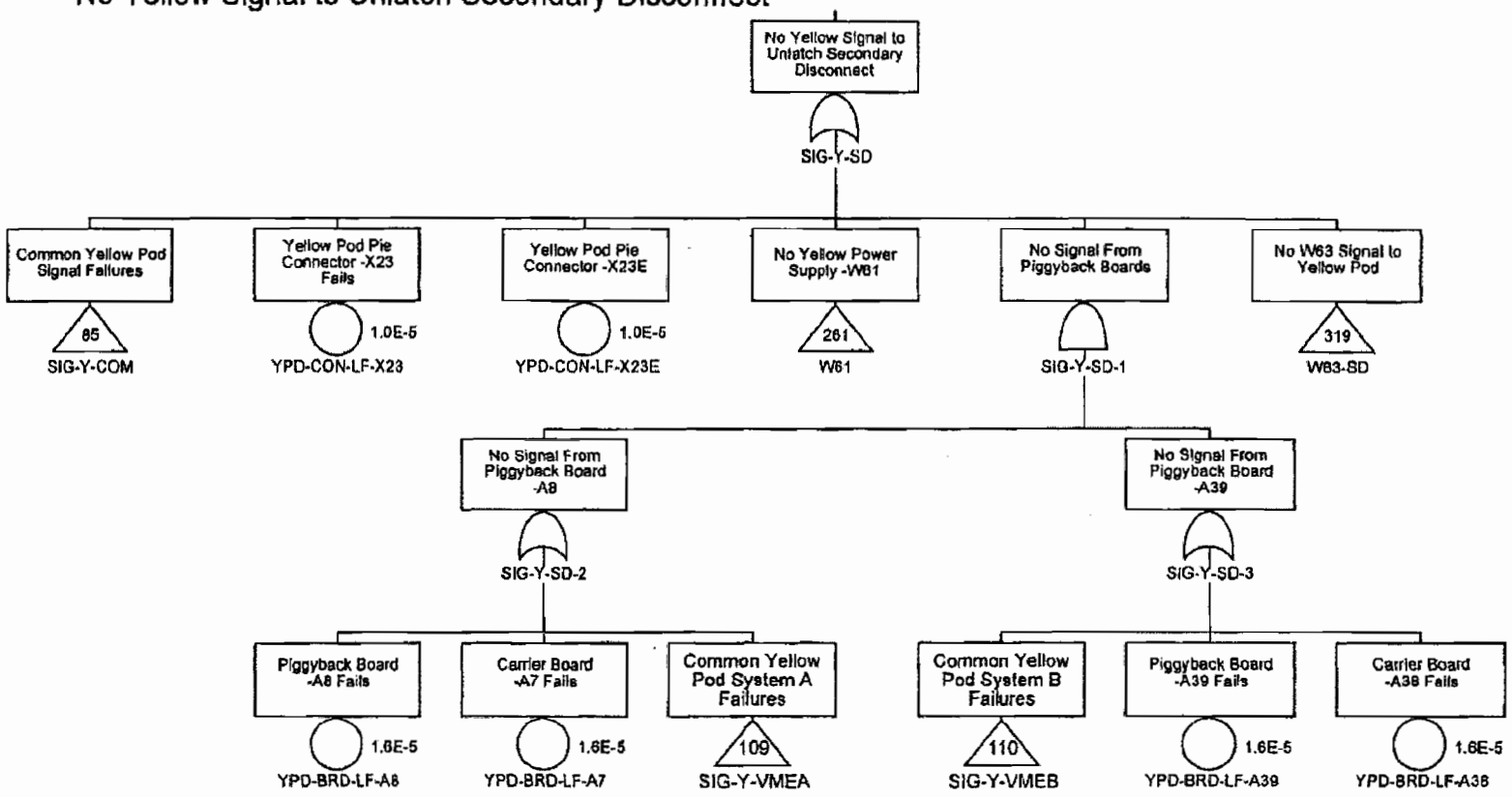

Confidential Treatment Requested by Transocean Holdings LLC

TRN-HCEC-00056552

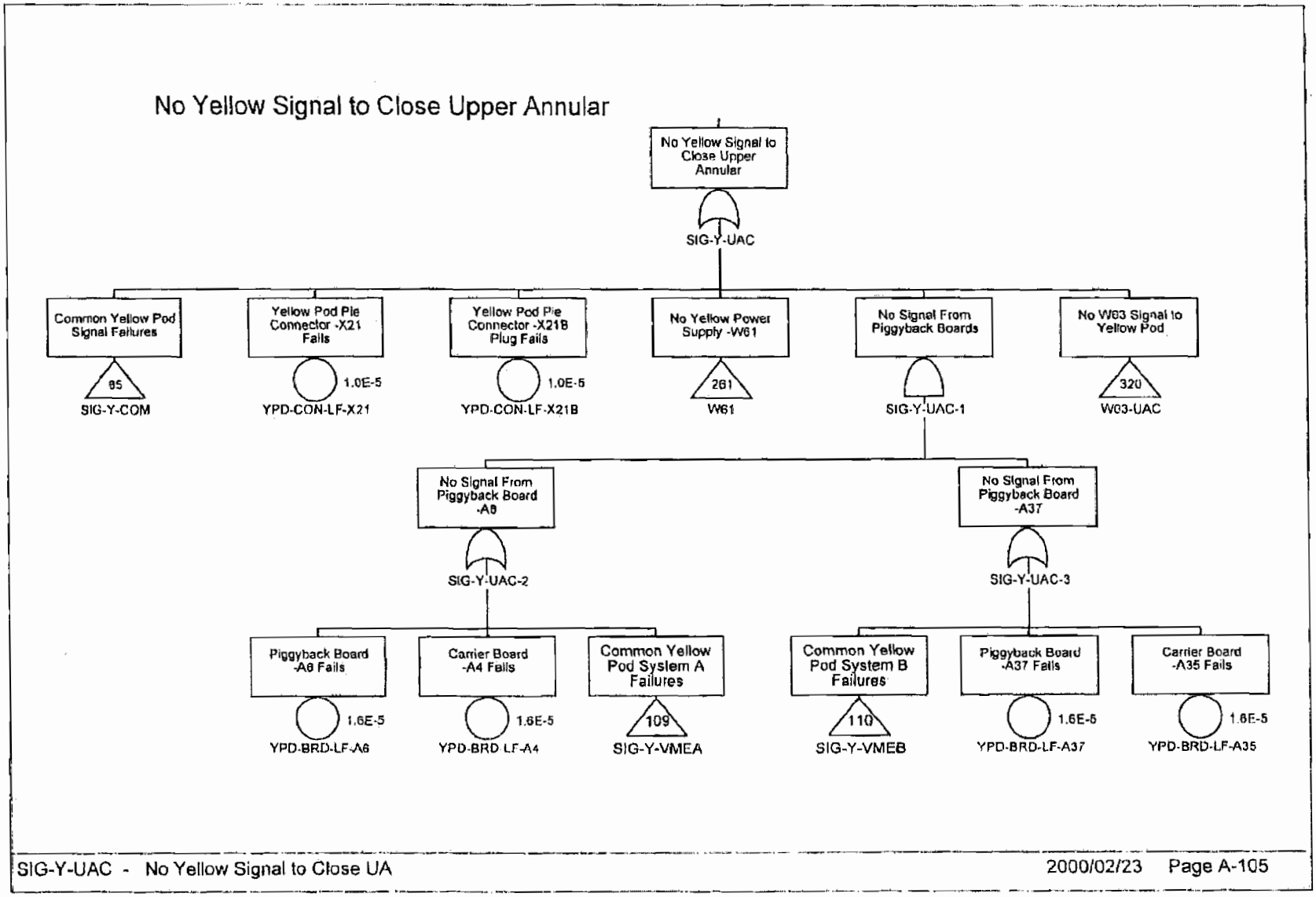

Confidential Treatment Requested by Transocean Holdings LLC

TRN-HCEC-00056553

No Yellow Signal to Close Blind Shear Ram - High Pressure

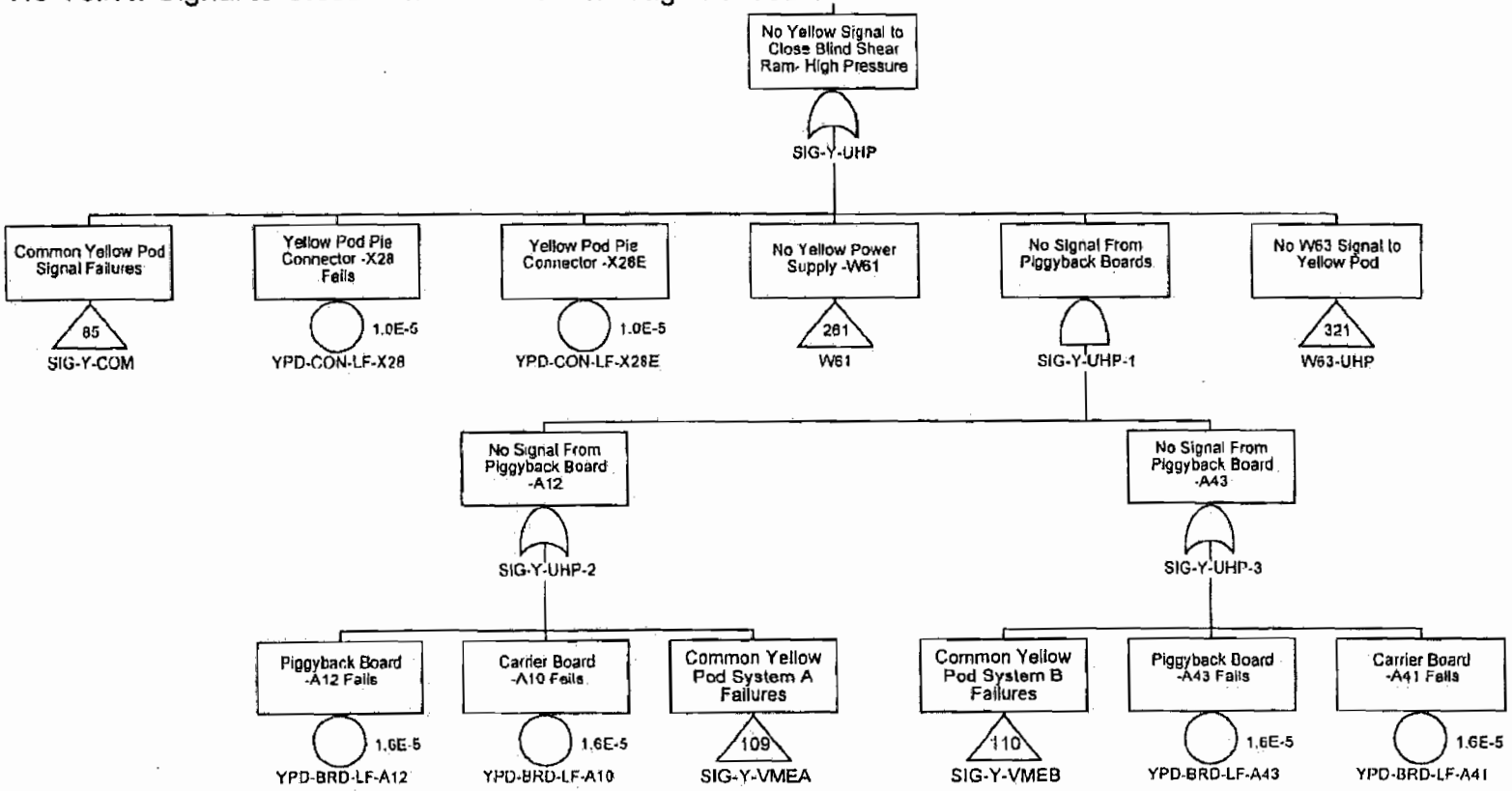

Confidential Treatment Requested by Transocean Holdings LLC

TRN-HCEC-00056554

No Yellow Signal to Close Upper Pipe Ram

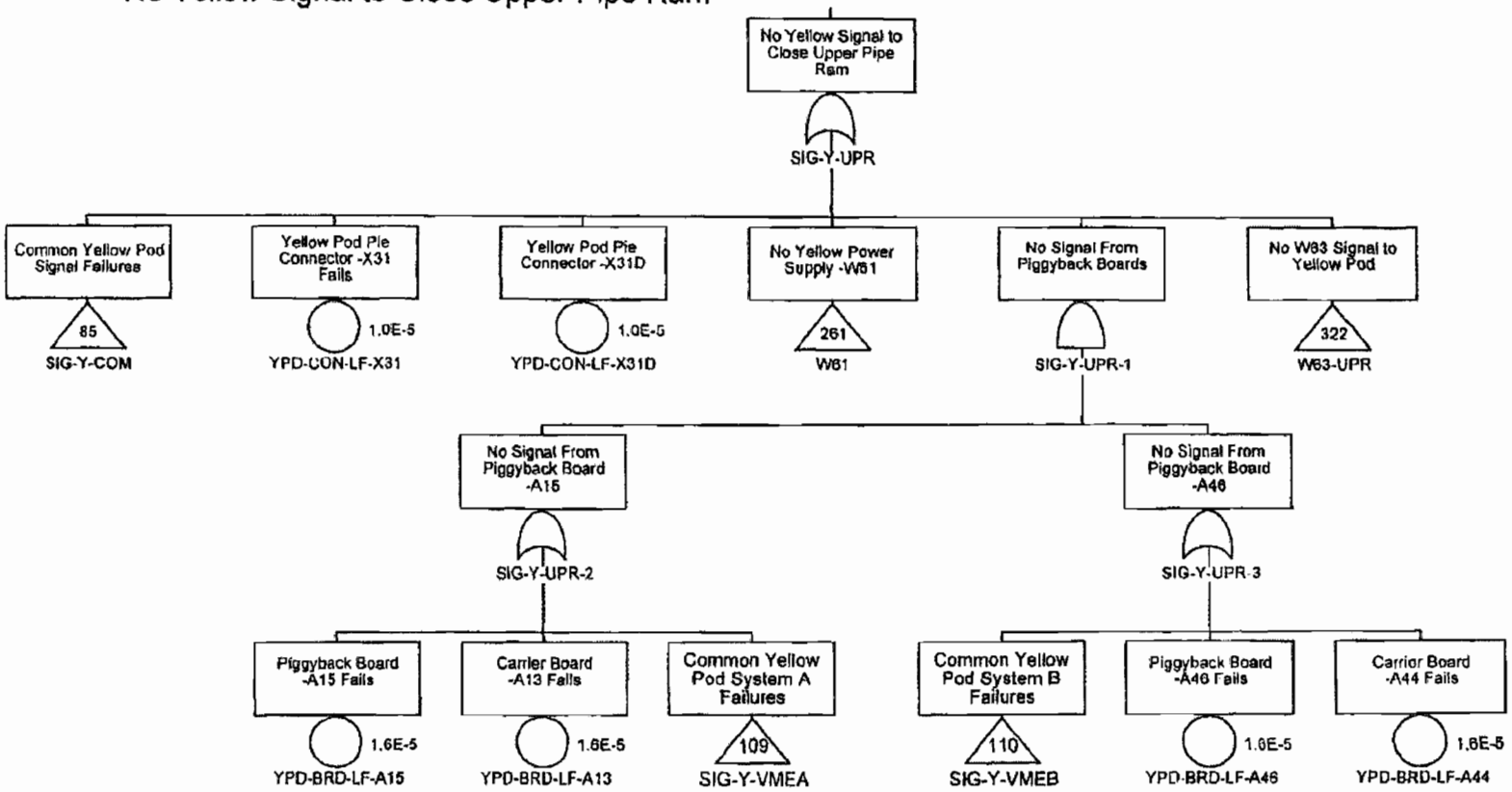

Confidential Treatment Requested by Transocean Holdings LLC

TRN-HCEC-00056555

No Yellow Signal to Close Blind Shear Ram

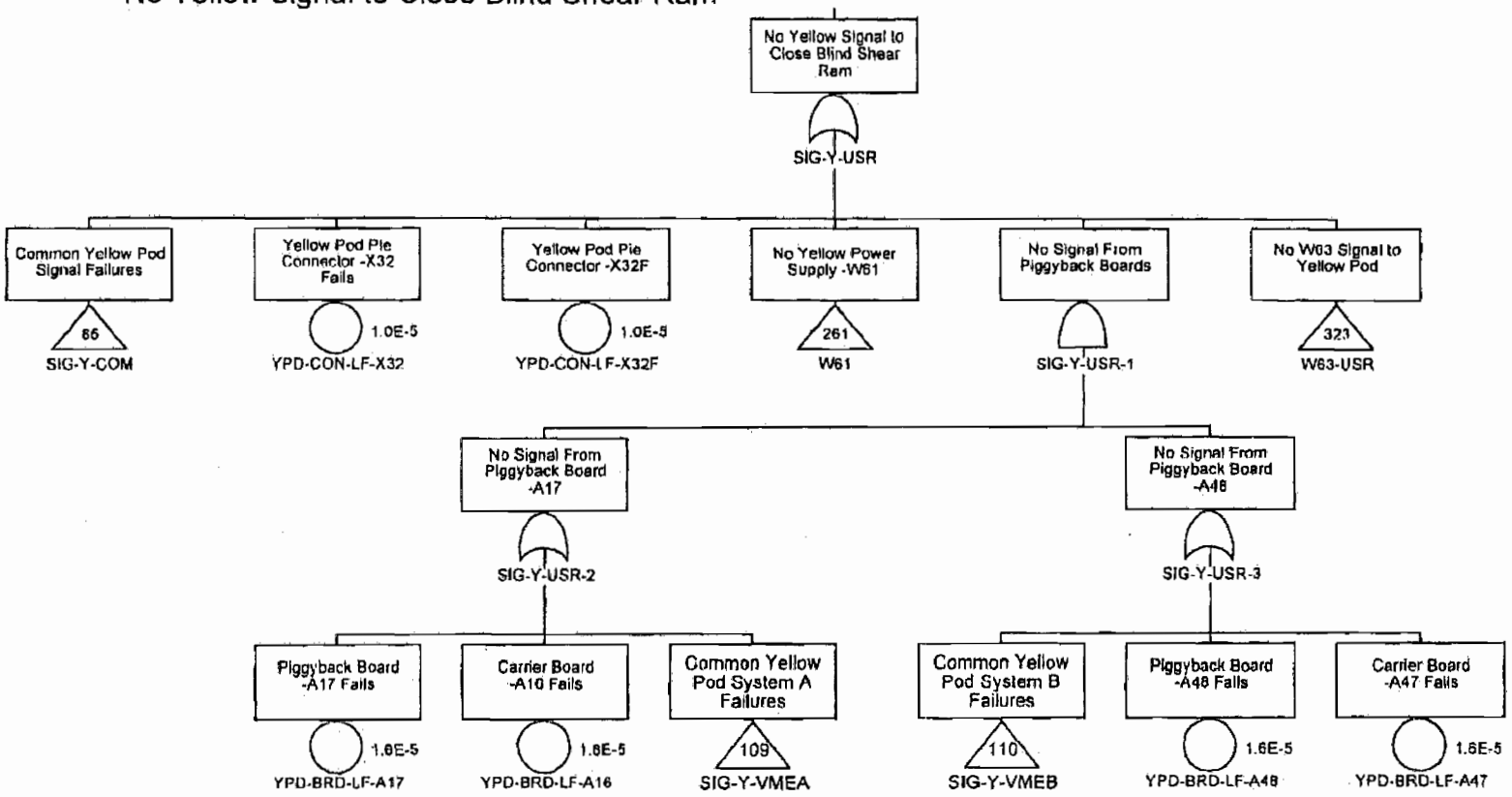

Confidential Treatment Requested by Transocean Holdings LLC

TRN-HCEC-00056556

Common Yellow Pod System A Failures

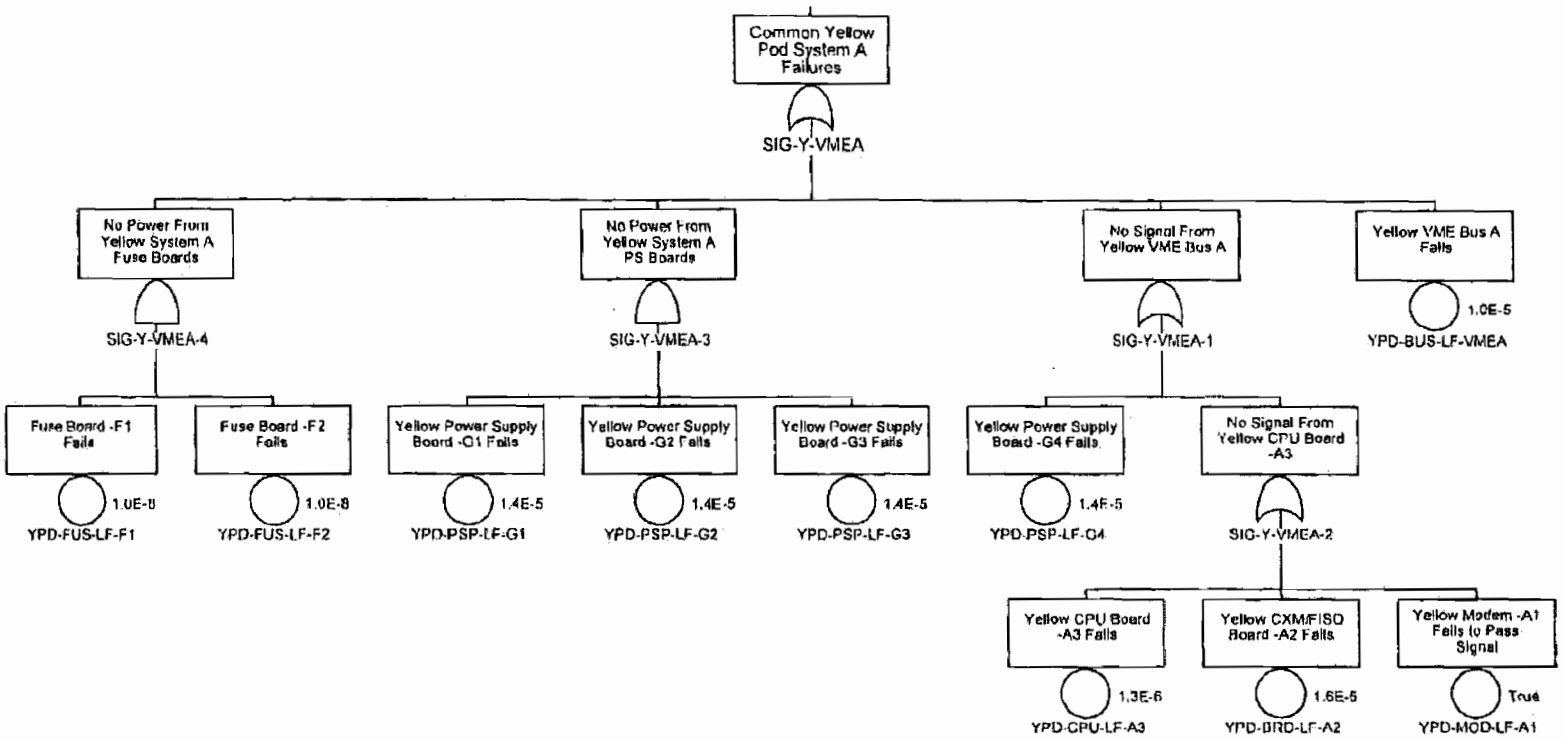

Confidential Treatment Requested by Transocean Holdings LLC

TRN-HCEC-00056557

Common Yellow Pod System B Failures

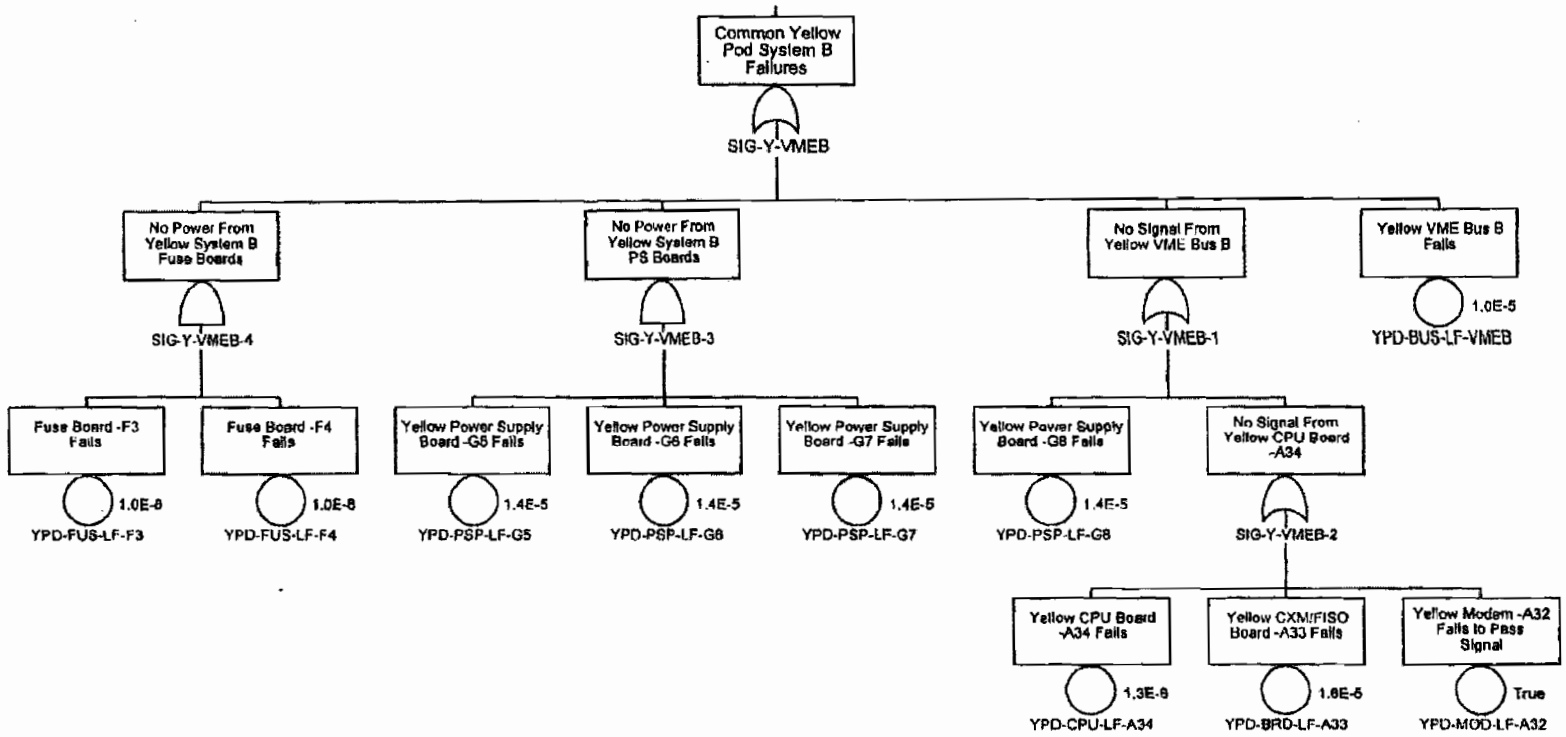

Confidential Treatment Requested by Transocean Holdings LLC

TRN-HCEC-00056558

No Yellow Signal to Open Yellow Conduit Supply

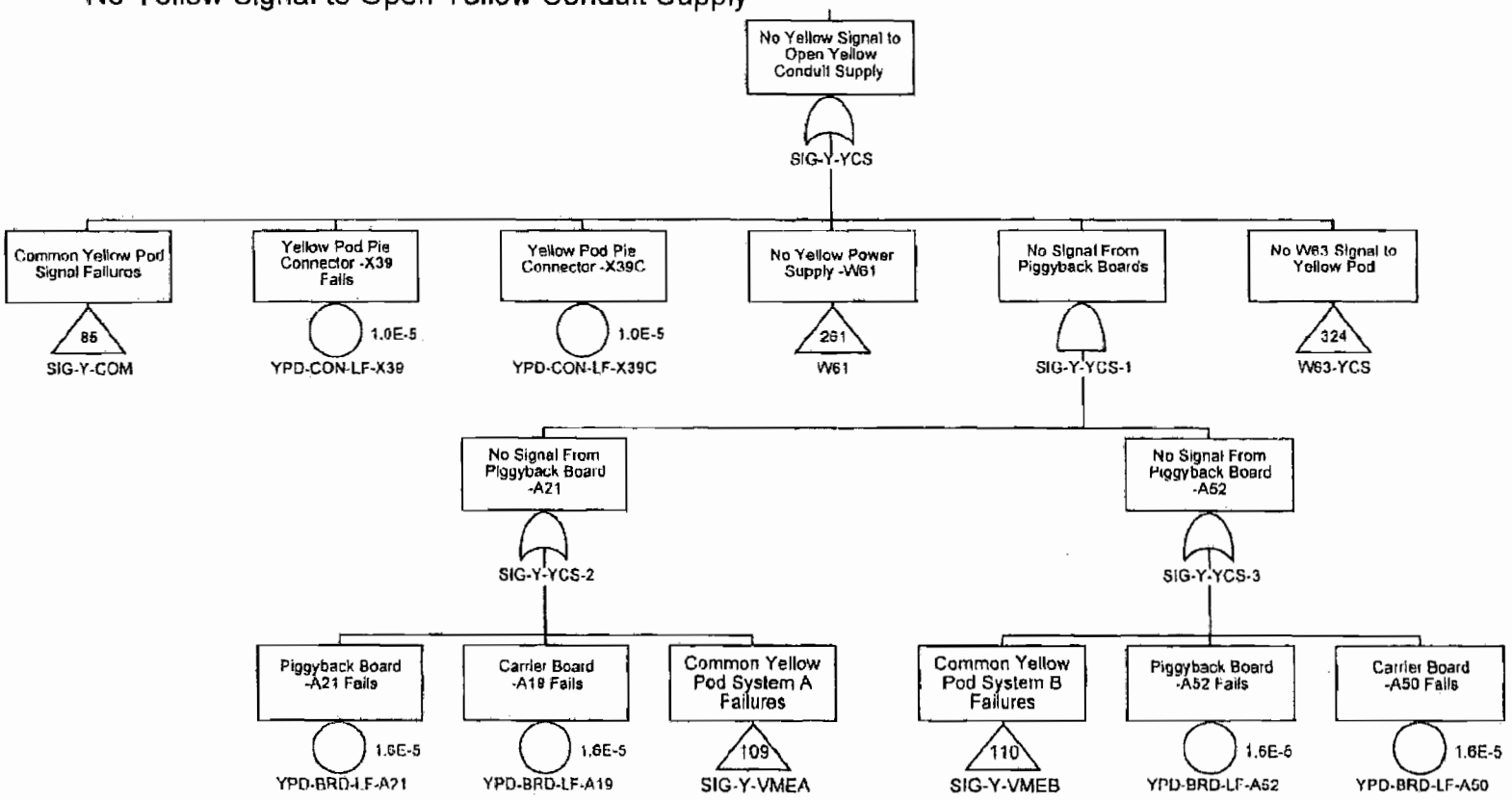

Confidential Treatment Requested by Transocean Holdings LLC

TRN-HCEC-00056559

No Yellow Signal to Open Yellow Hot Line Supply

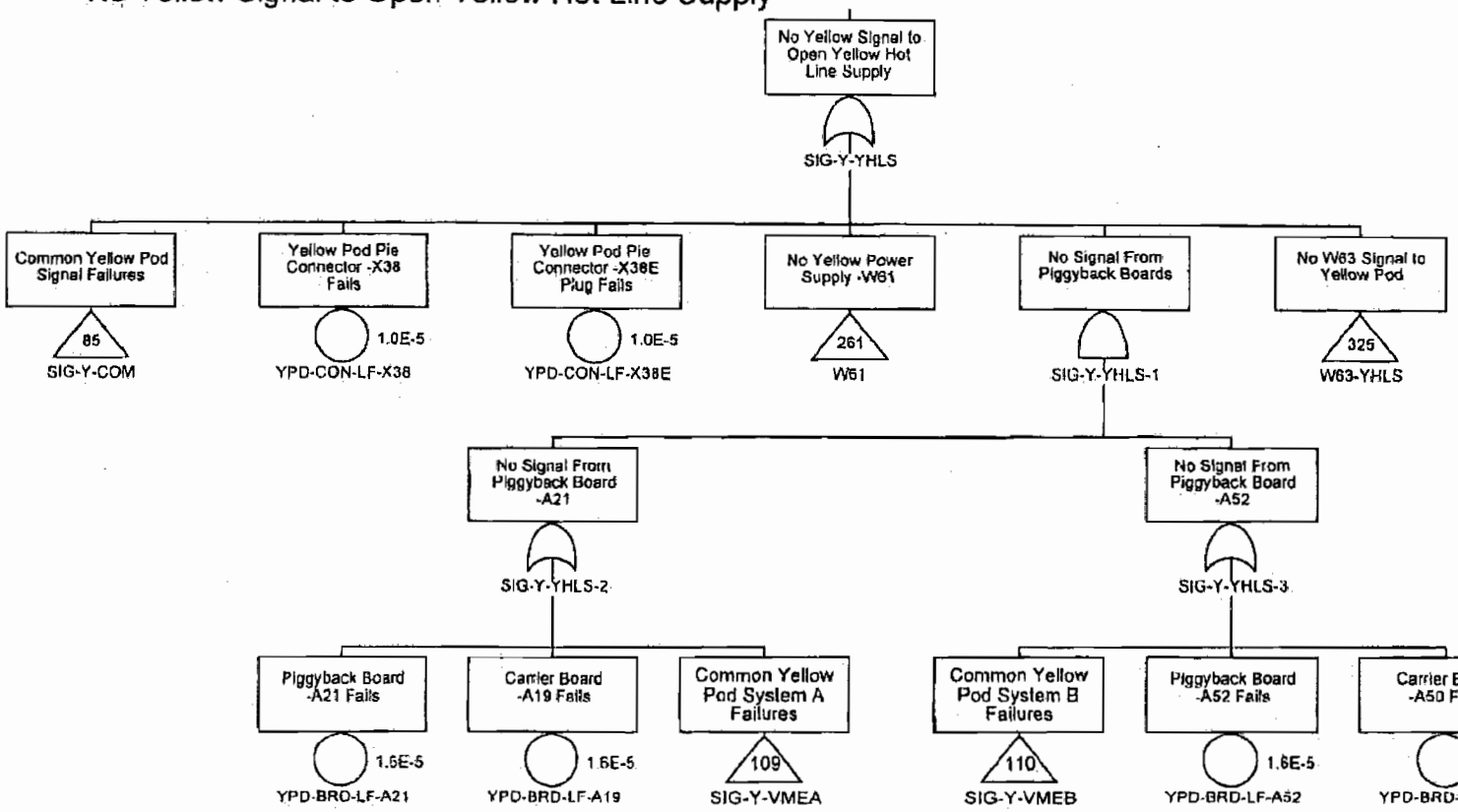

Confidential Treatment Requested by Transocean Holdings LLC

TRN-HCEC-00056560

No Hydraulic Supply to Upper Pipe Ram

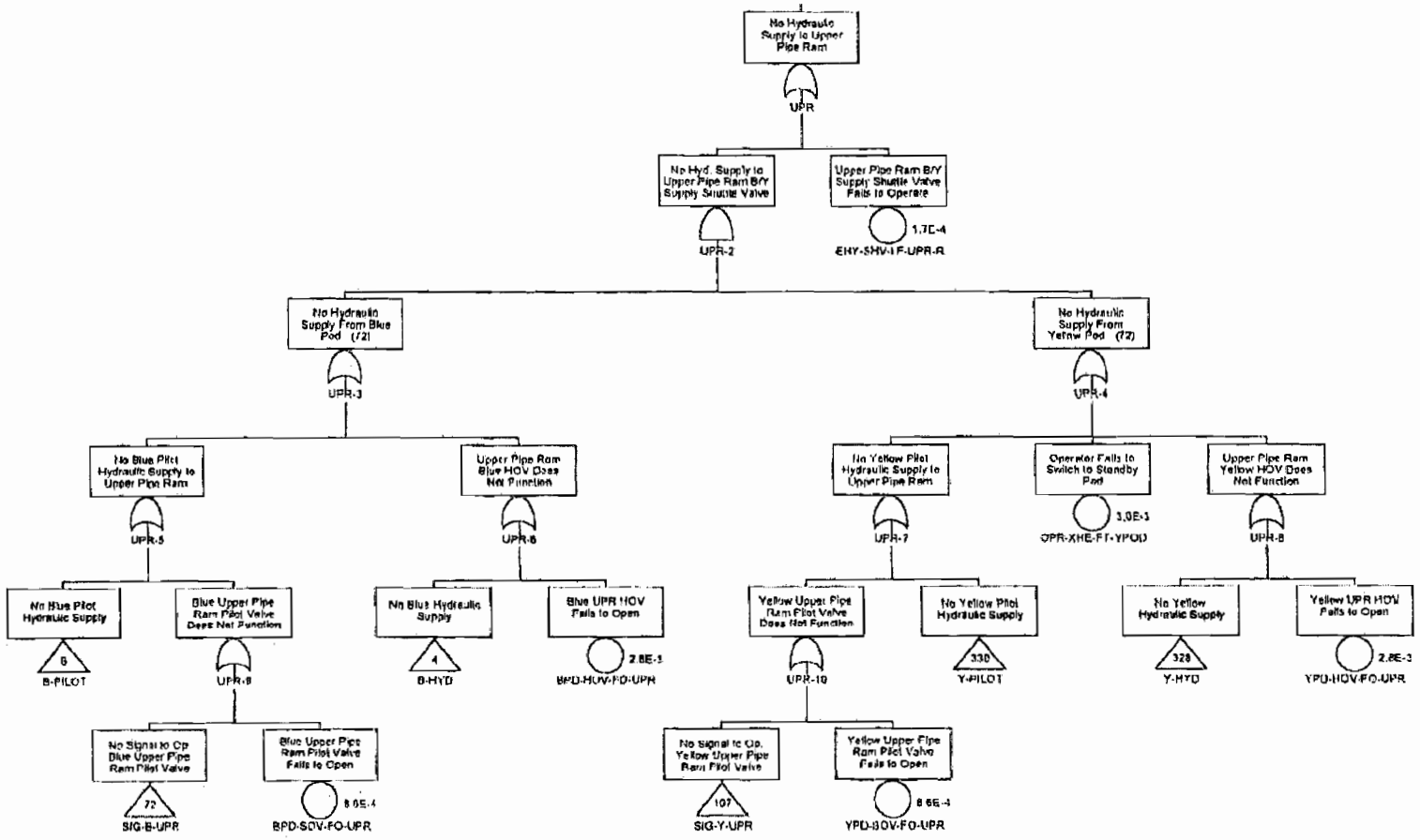

Confidential Treatment Requested by Transocean Holdings LLC

TRN-HCEC-00056561

Power Not Available from UPS-A

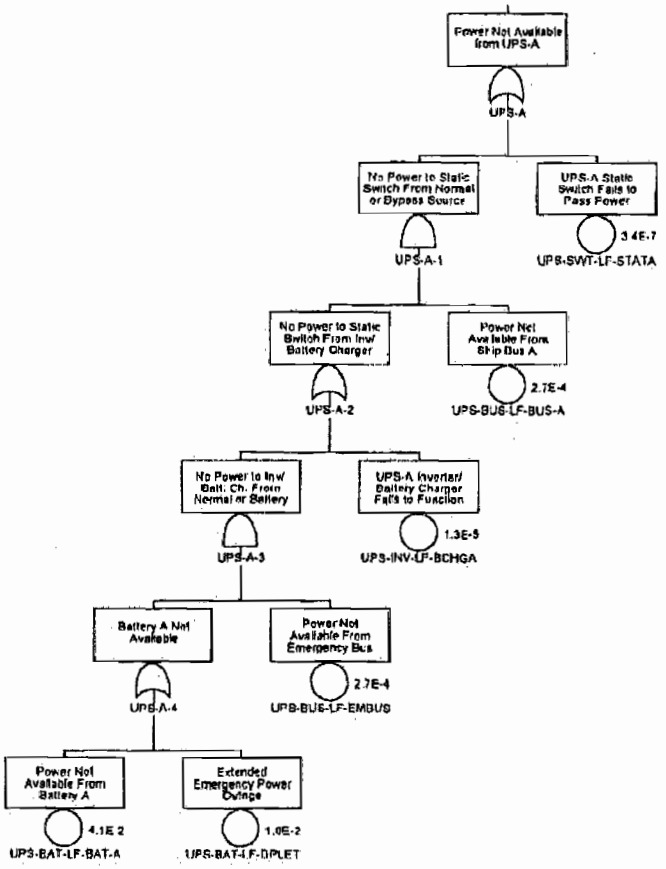

Confidential Treatment Requested by Transocean Holdings LLC

TRN-HCEC-00056562

Power Not Available from UPS-B

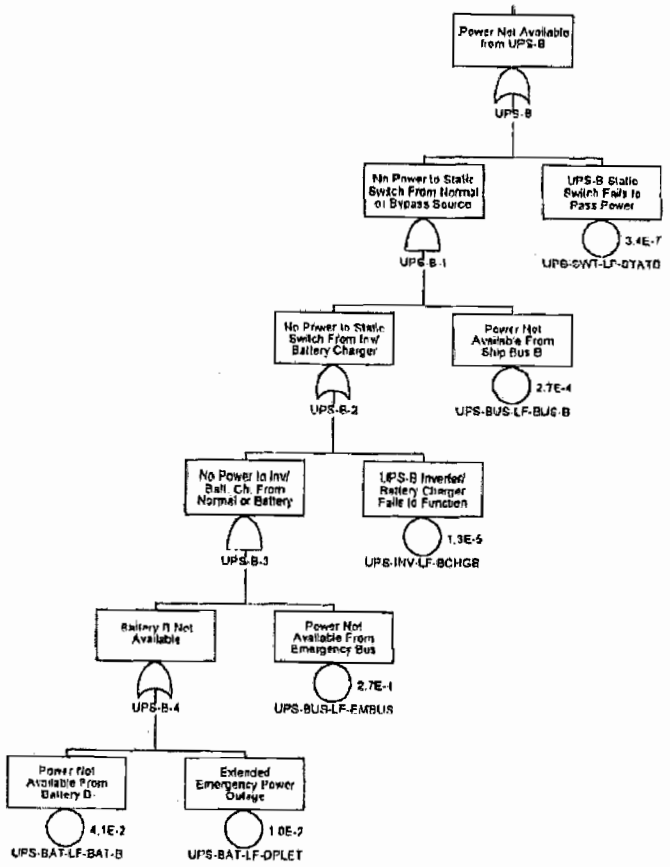

Confidential Treatment Requested by Transocean Holdings LLC

TRN-HCEC-00056563

No Hydraulic Supply to Blind Shear Ram

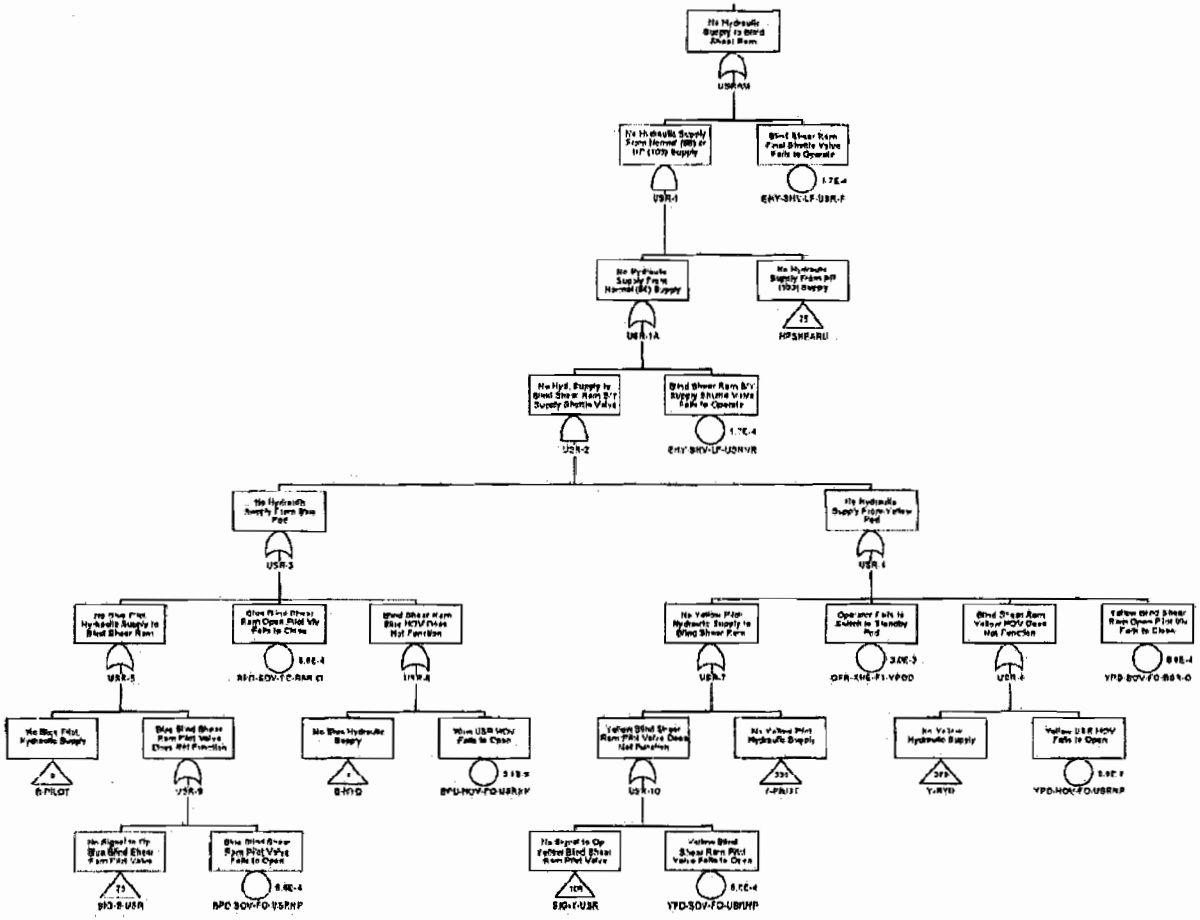

USRAM - No Hydraulic Supply to Upper Shear Ram

Confidential Treatment Requested by Transocean Holdings LLC

TRN-HCEC-00056564

Power Not Available From CDP-A W22

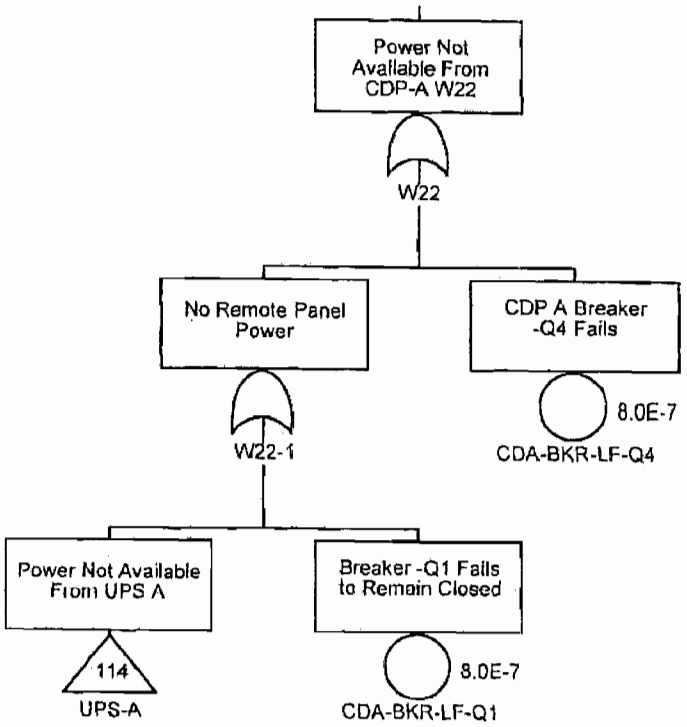

Confidential Treatment Requested by Transocean Holdings LLC

TRN-HCEC-00056565

Power Not Available From CDP-B W23

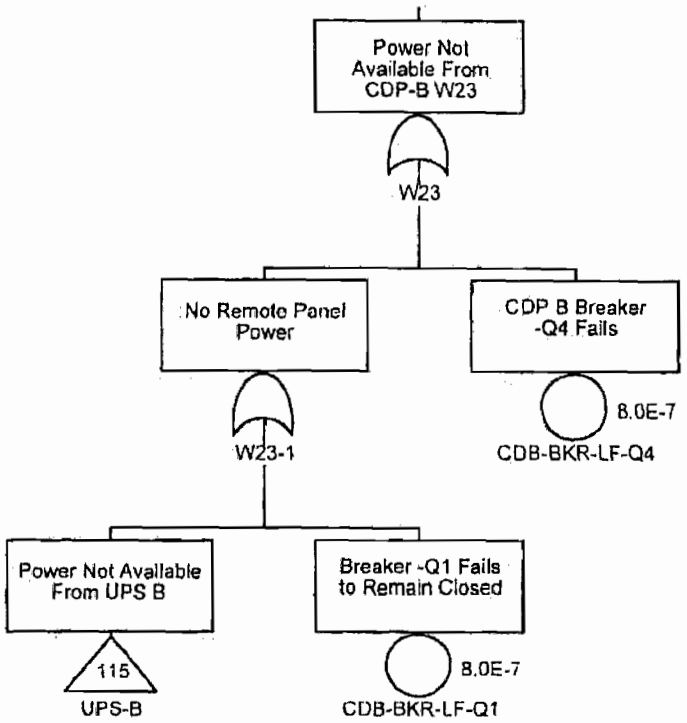

Confidential Treatment Requested by Transocean Holdings LLC

TRN-HCEC-00056566

No W28 Signal From Driller's Panel - Open Blue Conduit Supply

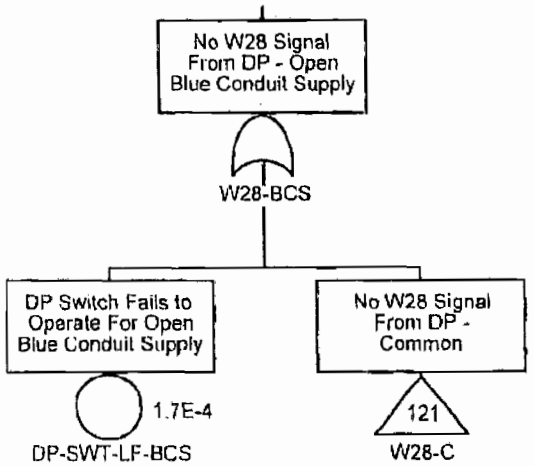

Confidential Treatment Requested by Transocean Holdings LLC

TRN-HCEC-00056567

No W28 Signal From Driller's Panel - Open Blue HL Supply

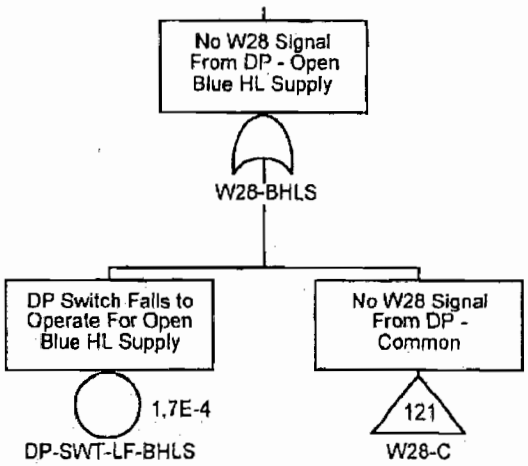

Confidential Treatment Requested by Transocean Holdings LLC

TRN-HCEC-00056568

No W28 Signal From DP - Common

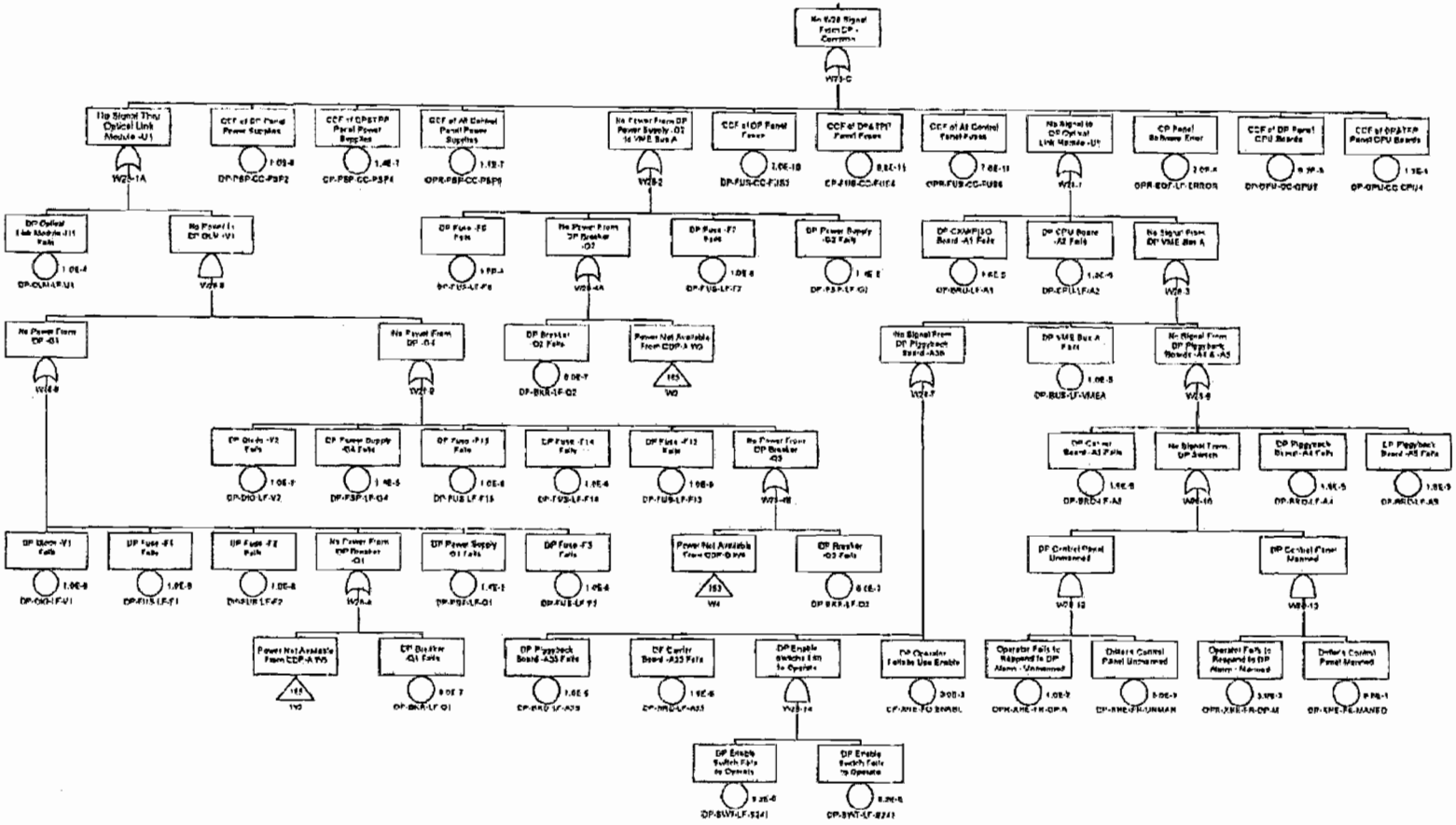

Confidential Treatment Requested by Transocean Holdings LLC

TRN-HCEC-00056569

No W28 Signal From DP - HP Close CSR

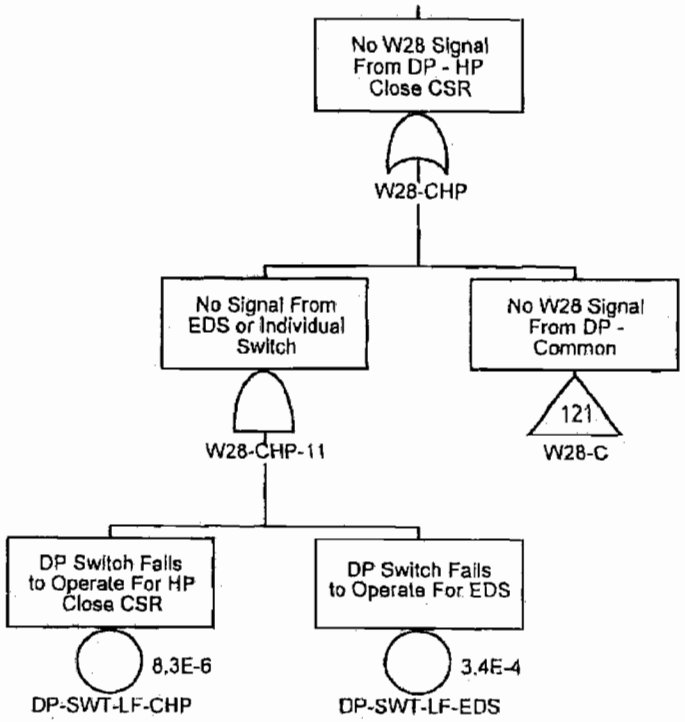

Confidential Treatment Requested by Transocean Holdings LLC

TRN-HCEC-00056570

No W28 Signal From DP - Close LIC

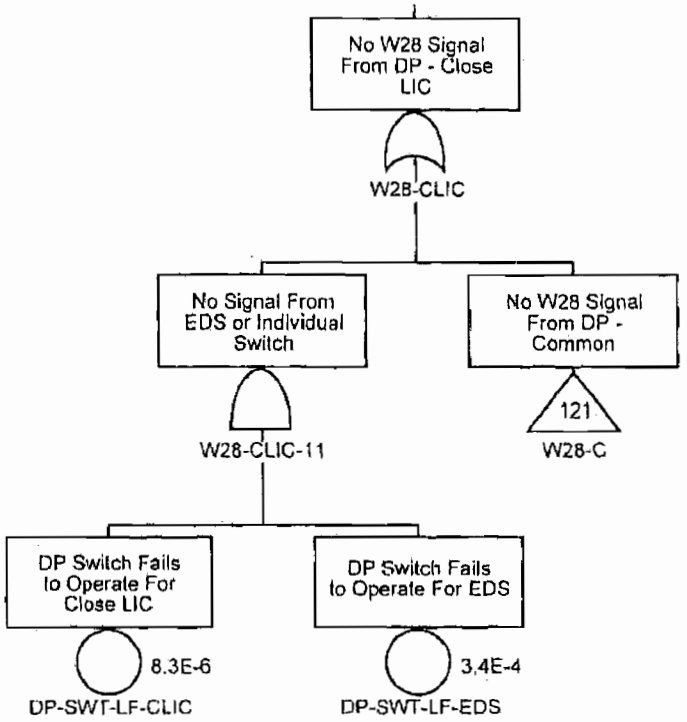

Confidential Treatment Requested by Transocean Holdings LLC

TRN-HCEC-00056571

No W28 Signal From DP - Close LIK

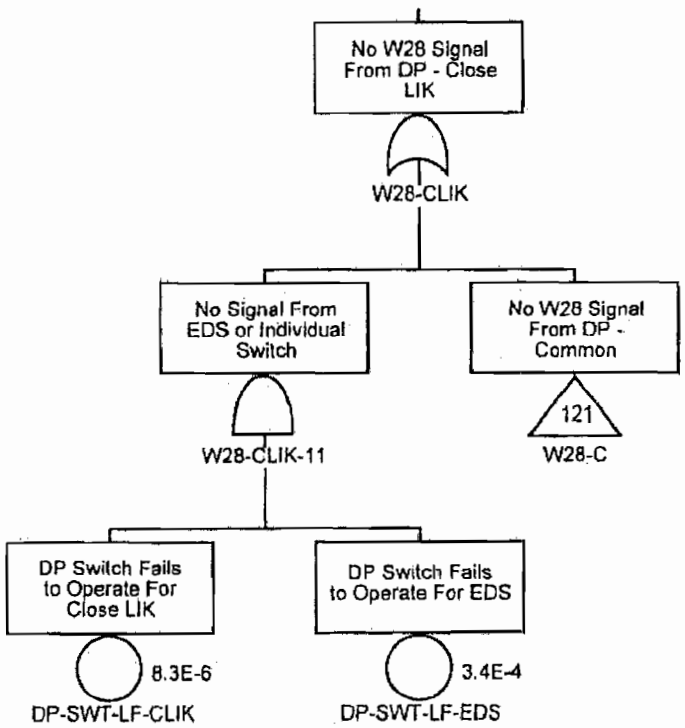

Confidential Treatment Requested by Transocean Holdings LLC

TRN-HCEC-00056572

No W28 Signal From DP - Close LOC

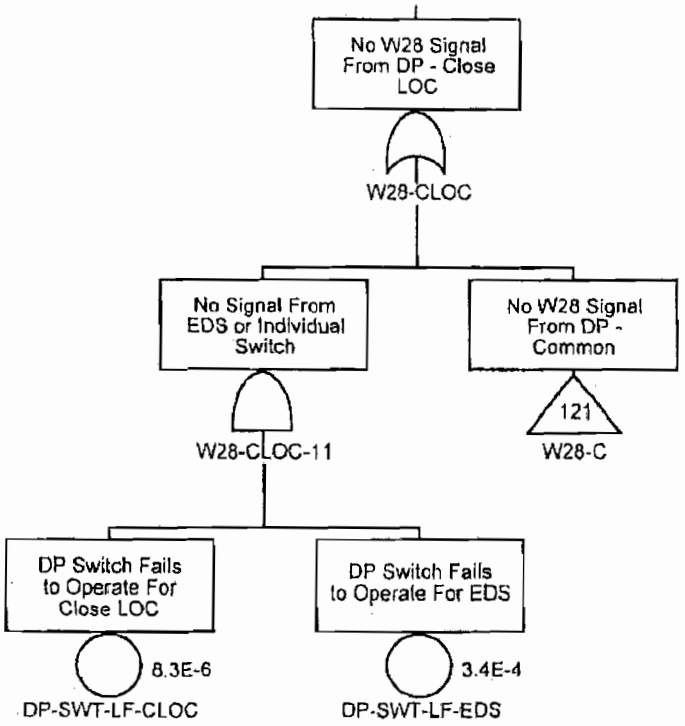

Confidential Treatment Requested by Transocean Holdings LLC

TRN-HCEC-00056573

No W28 Signal From DP - Close LOK

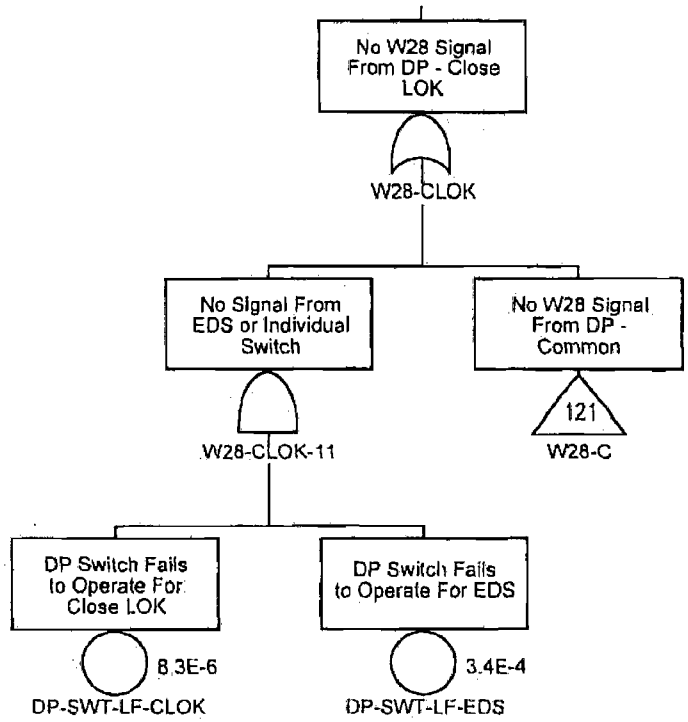

Confidential Treatment Requested by Transocean Holdings LLC

TRN-HCEC-00056574

No W28 Signal From DP - Close CSR

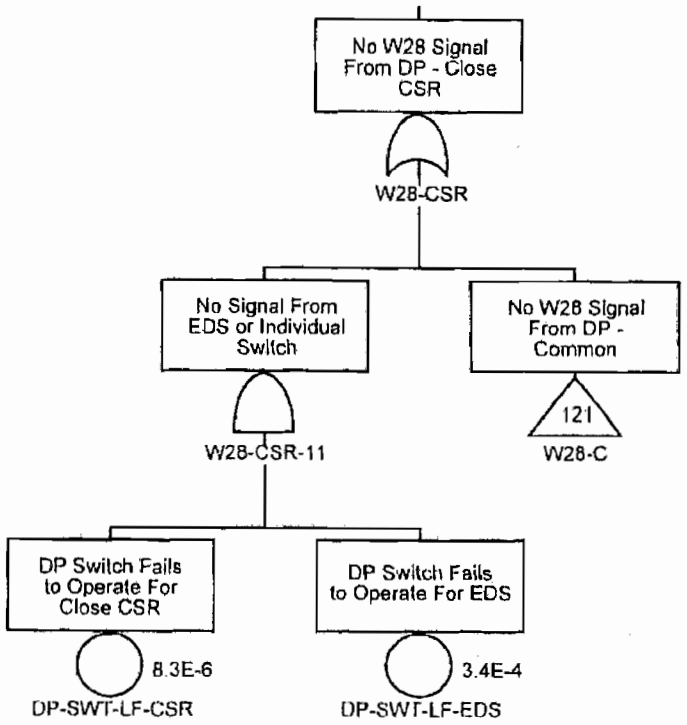

Confidential Treatment Requested by Transocean Holdings LLC

TRN-HCEC-00056575

No W28 Signal From DP - Close UIC

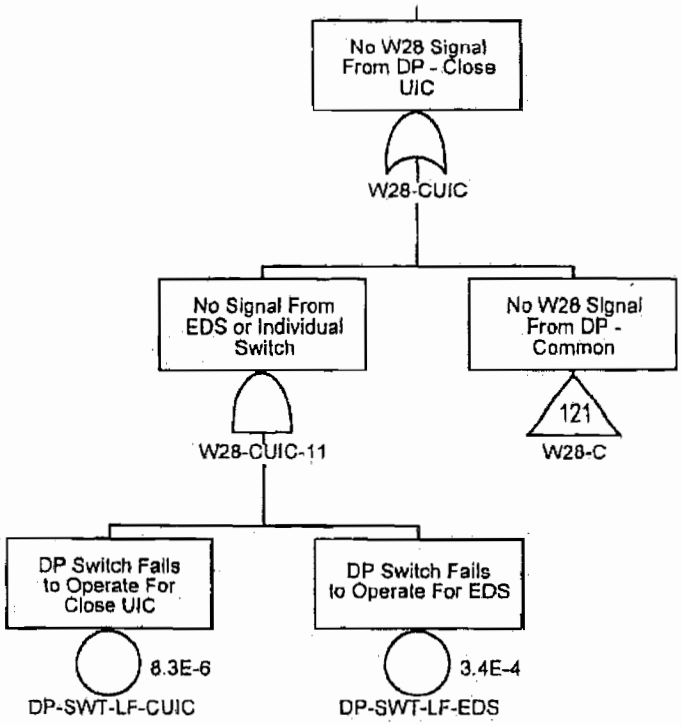

Confidential Treatment Requested by Transocean Holdings LLC

TRN-HCEC-00056576

No W28 Signal From DP - Close UIK

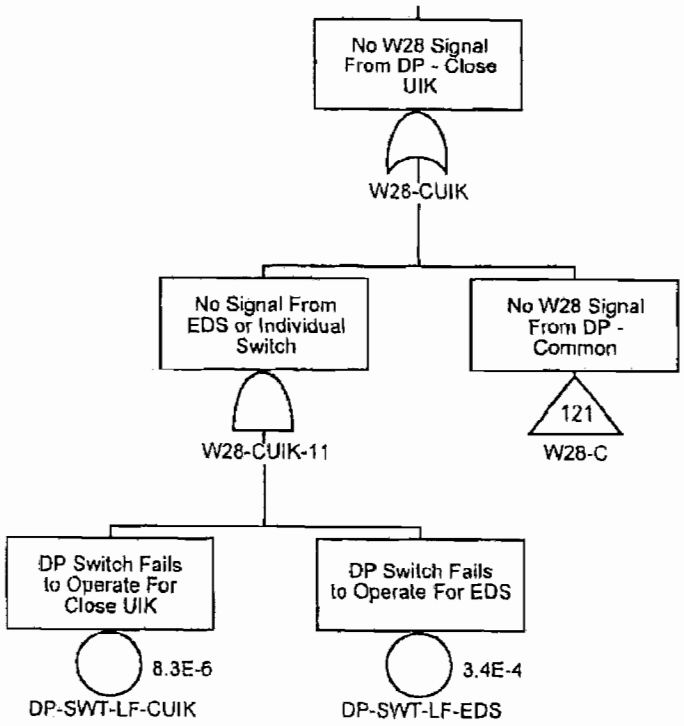

Confidential Treatment Requested by Transocean Holdings LLC

TRN-HCEC-00056577

No W28 Signal From DP - Close UOC

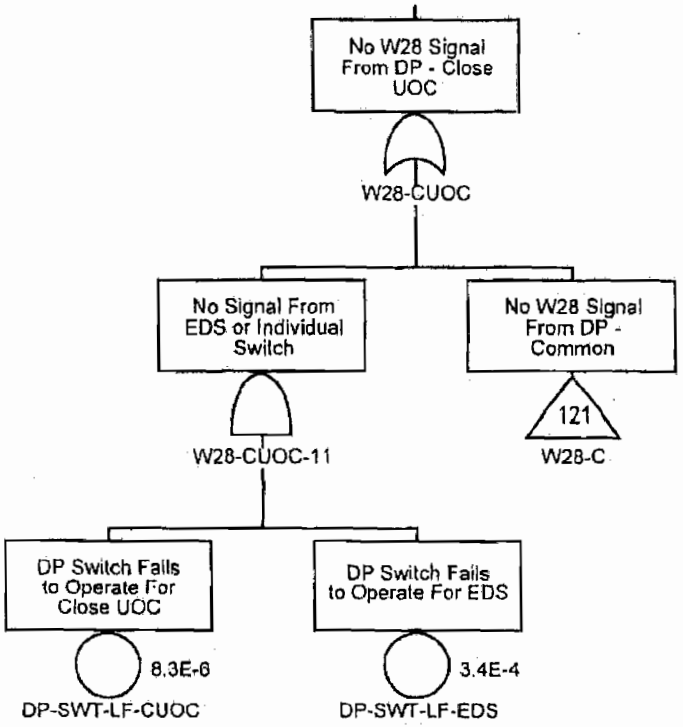

Confidential Treatment Requested by Transocean Holdings LLC

TRN-HCEC-00056578

No W28 Signal From DP - Close UOK

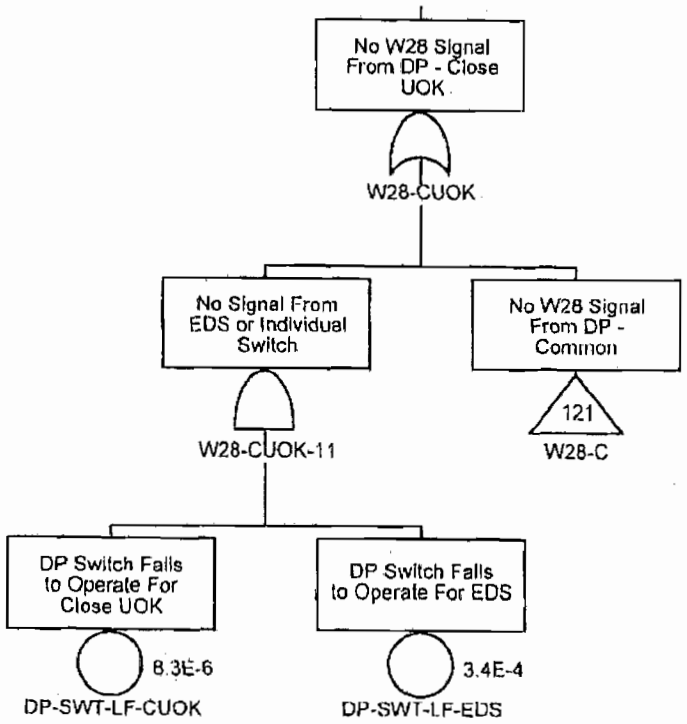

Confidential Treatment Requested by Transocean Holdings LLC

TRN-HCEC-00056579

No W28 Signal From DP - Close LA

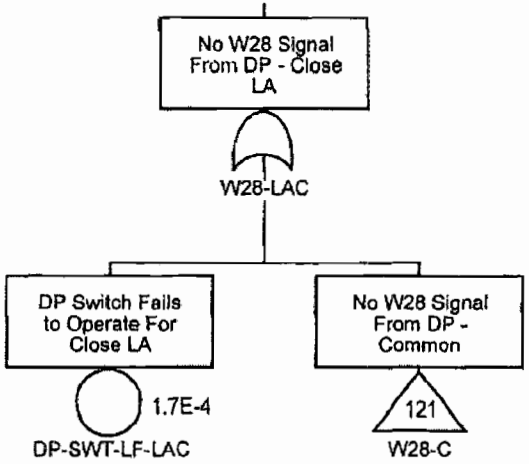

Confidential Treatment Requested by Transocean Holdings LLC

TRN-HCEC-00056580

No W28 Signal From DP - Close LPR

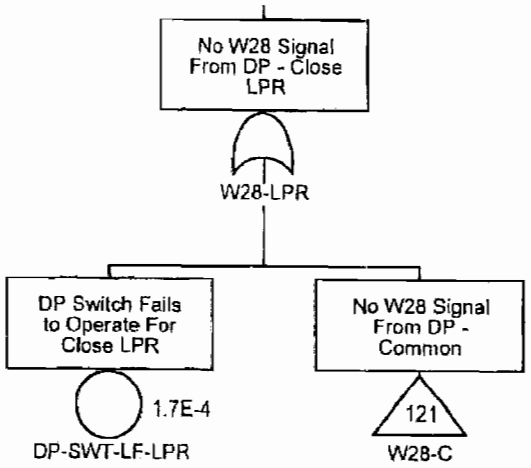

Confidential Treatment Requested by Transocean Holdings LLC

TRN-HCEC-00056581

No W28 Signal From DP - Close MPR

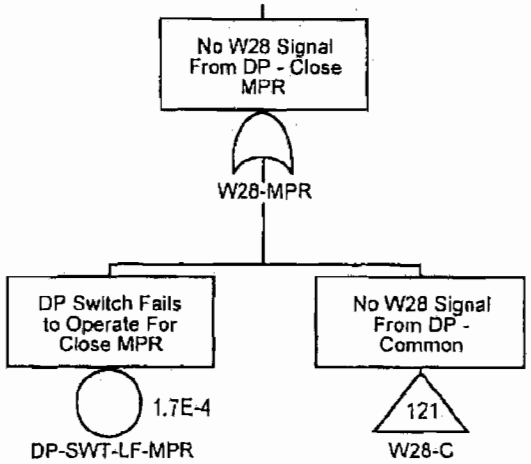

Confidential Treatment Requested by Transocean Holdings LLC

TRN-HCEC-00056582

No W28 Signal From DP - Open LIC

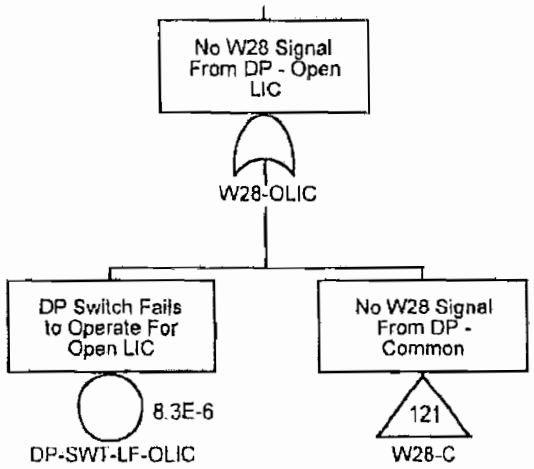

Confidential Treatment Requested by Transocean Holdings LLC

TRN-HCEC-00056583

No W28 Signal From DP - Open LIK

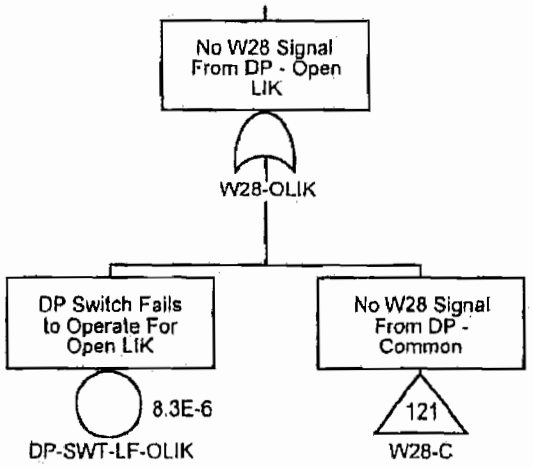

Confidential Treatment Requested by Transocean Holdings LLC

TRN-HCEC-00056584

No W28 Signal From DP - Open LOC

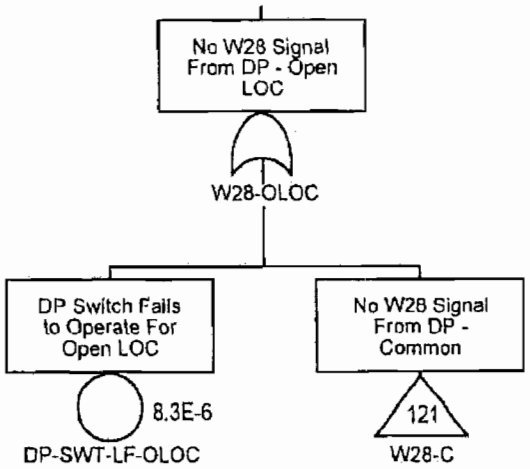

Confidential Treatment Requested by Transocean Holdings LLC

TRN-HCEC-00056585

No W28 Signal From DP - Open LOK

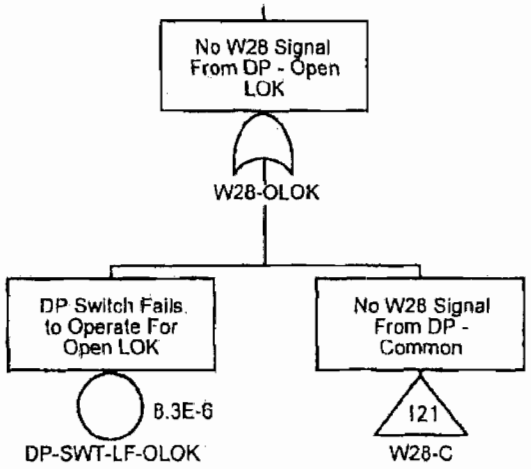

Confidential Treatment Requested by Transocean Holdings LLC

TRN-HCEC-00056586

No W28 Signal From DP - Open UIC

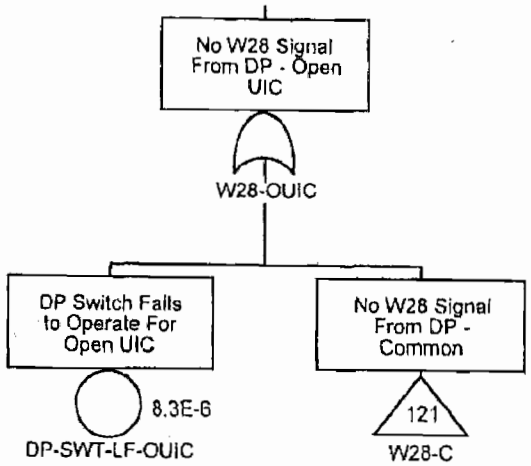

Confidential Treatment Requested by Transocean Holdings LLC

TRN-HCEC-00056587

No W28 Signal From DP - Open UIK

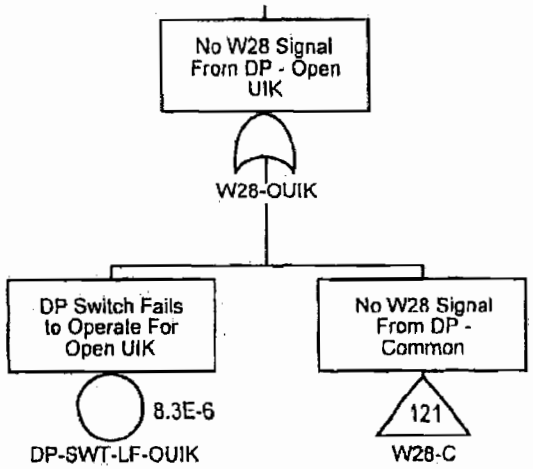

Confidential Treatment Requested by Transocean Holdings LLC

TRN-HCEC-00056588

No W28 Signal From DP - Open UOC

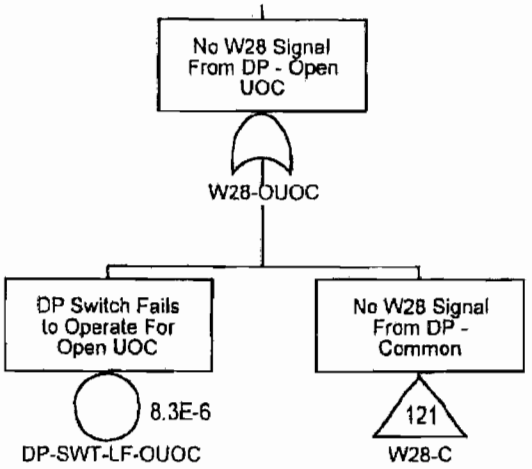

Confidential Treatment Requested by Transocean Holdings LLC

TRN-HCEC-00056589

No W28 Signal From DP - Open UOK

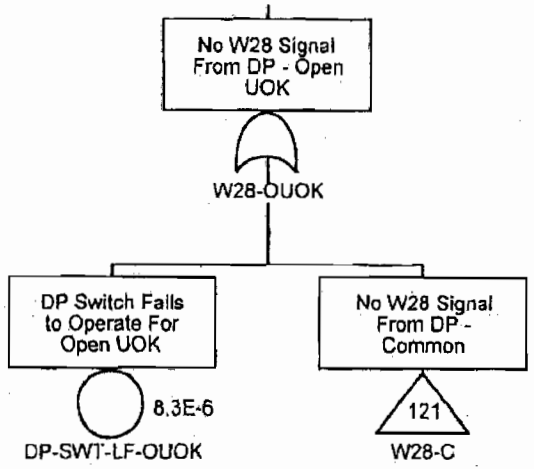

Confidential Treatment Requested by Transocean Holdings LLC

TRN-HCEC-00056590

No W28 Signal From DP - LMRP Pri. Dis.

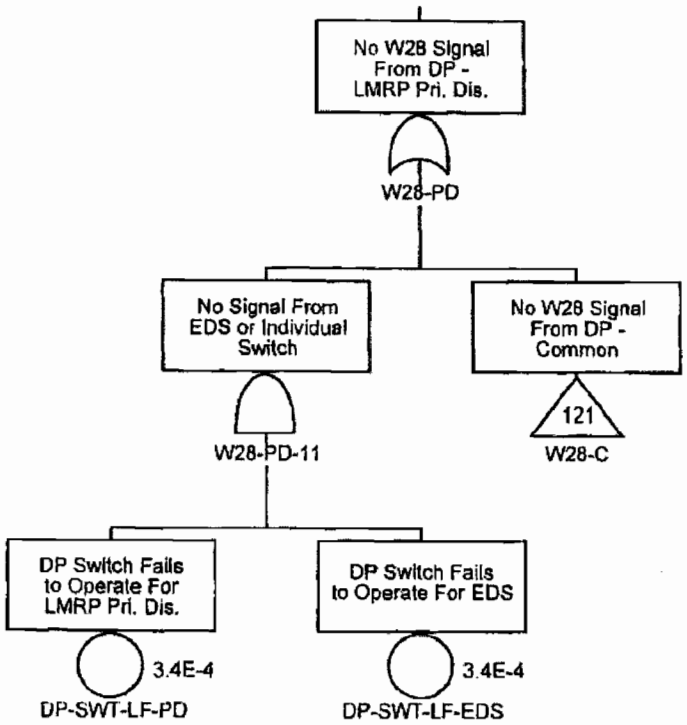

Confidential Treatment Requested by Transocean Holdings LLC

TRN-HCEC-00056591

No W28 Signal From DP - Pod Select

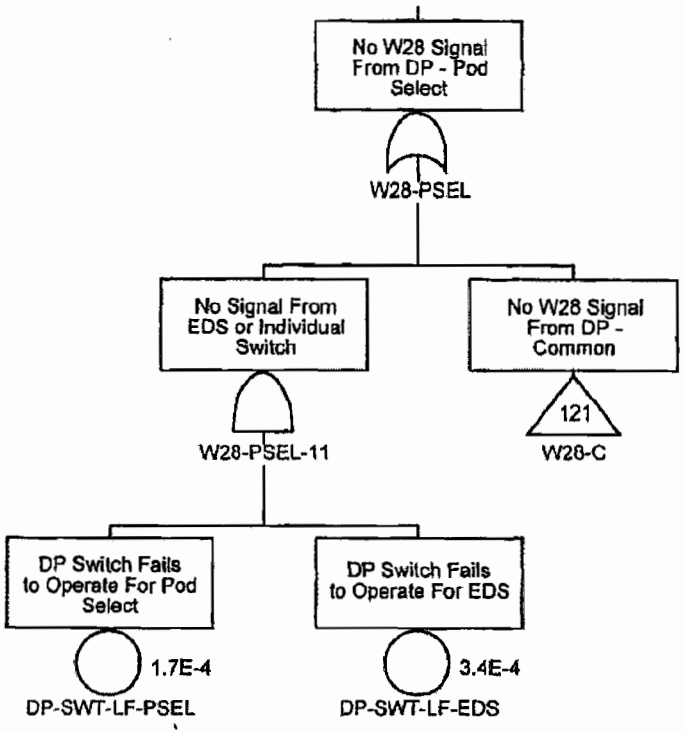

Confidential Treatment Requested by Transocean Holdings LLC

TRN-HCEC-00056592

No W28 Signal From DP - LMRP Sec. Dis.

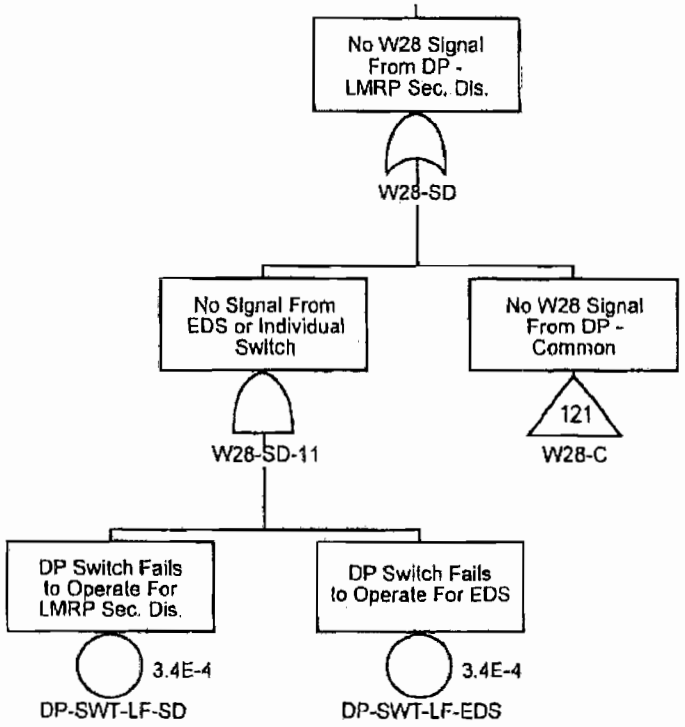

Confidential Treatment Requested by Transocean Holdings LLC

TRN-HCEC-00056593

No W28 Signal From DP - Close UA

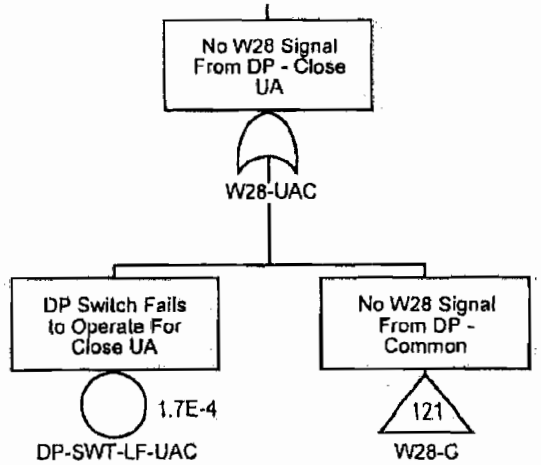

Confidential Treatment Requested by Transocean Holdings LLC

TRN-HCEC-00056594

No W28 Signal From DP - HP Close USR

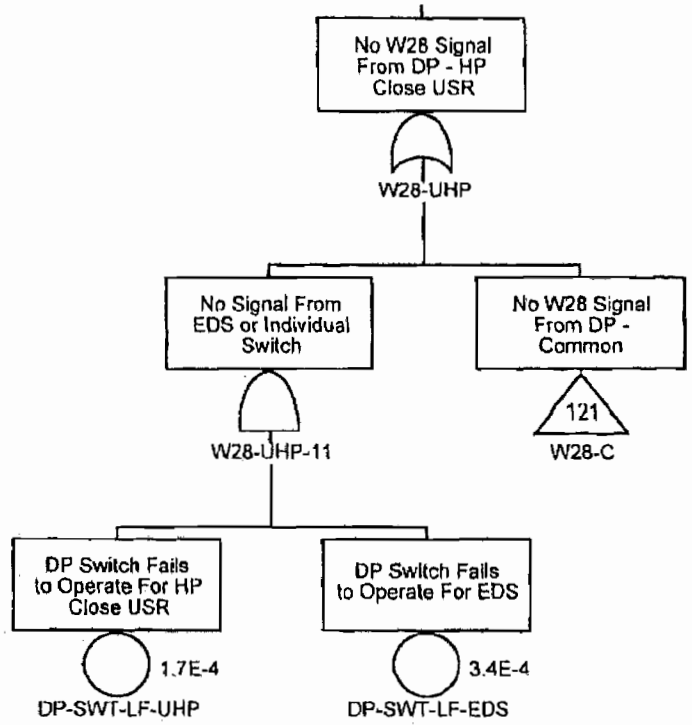

Confidential Treatment Requested by Transocean Holdings LLC

TRN-HCEC-00056595

No W28 Signal From DP - Close UPR

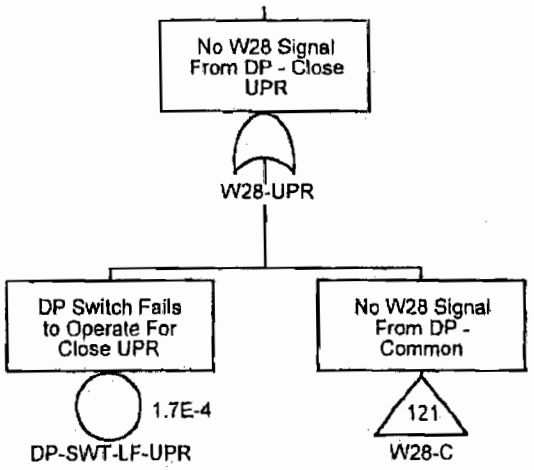

Confidential Treatment Requested by Transocean Holdings LLC

TRN-HCEC-00056596

No W28 Signal From DP - Close USR

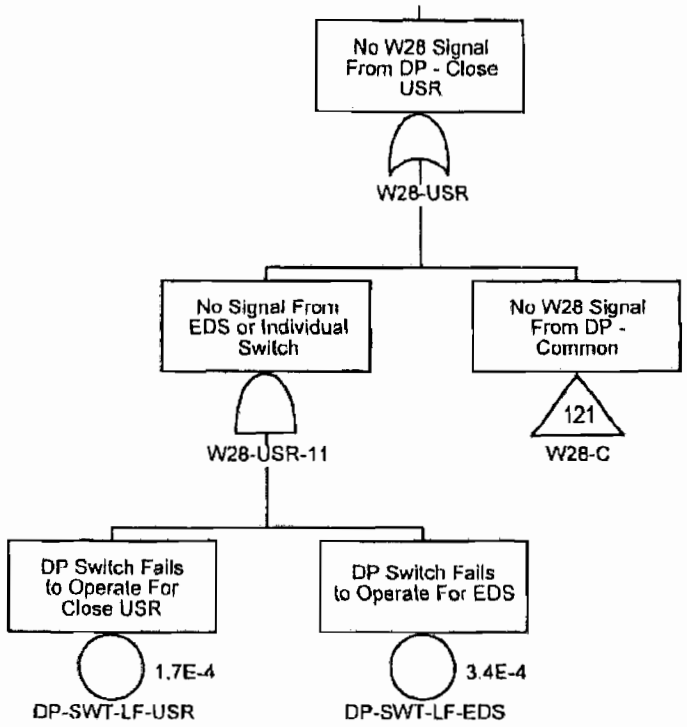

Confidential Treatment Requested by Transocean Holdings LLC

TRN-HCEC-00056597

No W28 Signal From Driller's Panel - Open Yellow Conduit Supp

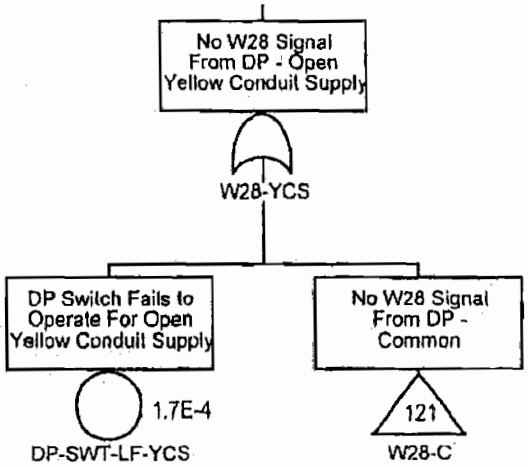

Confidential Treatment Requested by Transocean Holdings LLC

TRN-HCEC-00056598

No W28 Signal From Driller's Panel - Open Yellow HL Supply

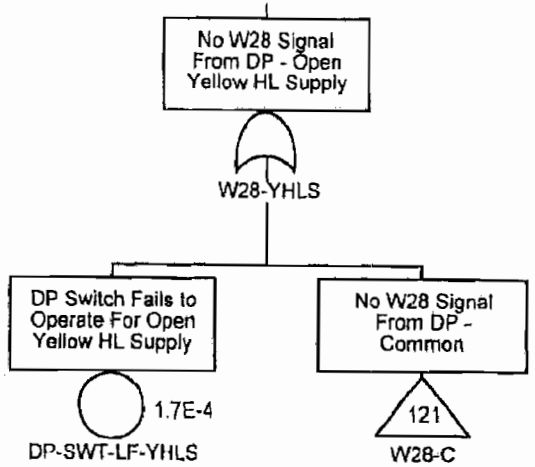

Confidential Treatment Requested by Transocean Holdings LLC

TRN-HCEC-00056599

No W29 Signal From Driller's Panel - Open Blue Conduit Supply

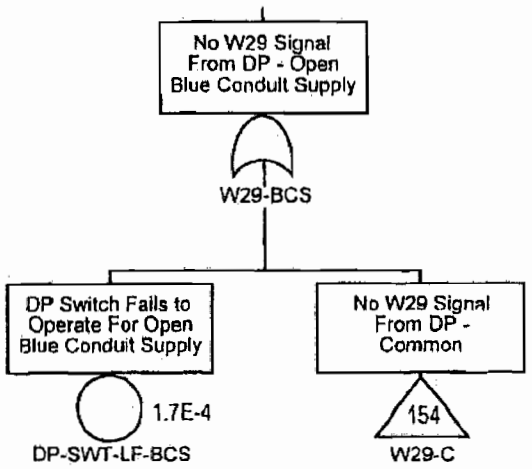

Confidential Treatment Requested by Transocean Holdings LLC

TRN-HCEC-00056600

No W29 Signal From Driller's Panel - Open Blue HL Supply

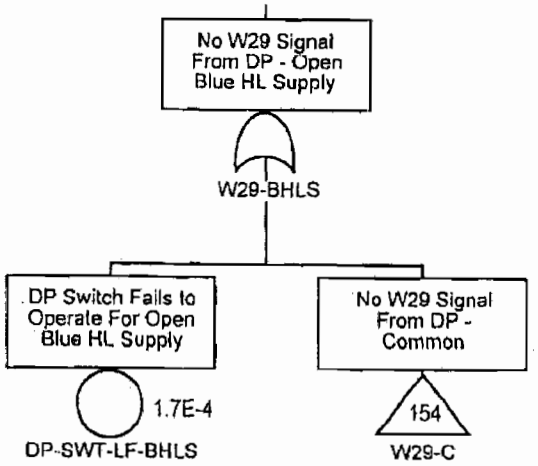

Confidential Treatment Requested by Transocean Holdings LLC

TRN-HCEC-00056601

No W29 Signal From DP - Common

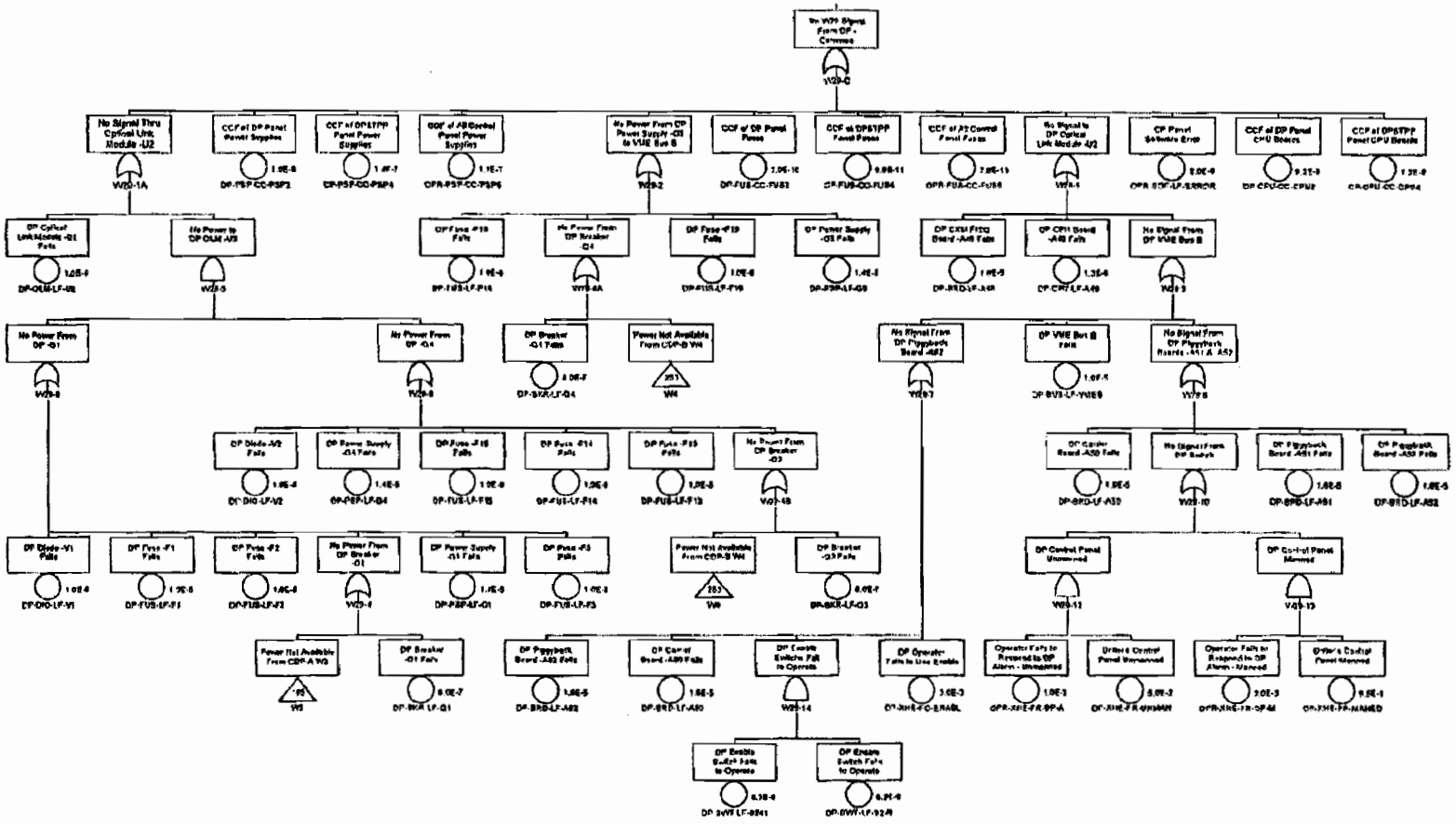

Confidential Treatment Requested by Transocean Holdings LLC

TRN-HCEC-00056602

No W29 Signal From DP - HP Close CSR

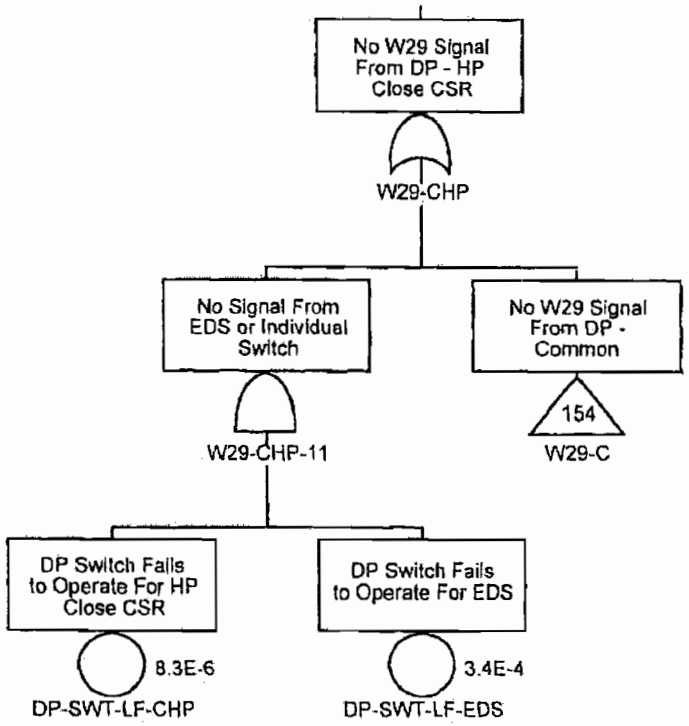

Confidential Treatment Requested by Transocean Holdings LLC

TRN-HCEC-00056603

No W29 Signal From DP - Close LIC

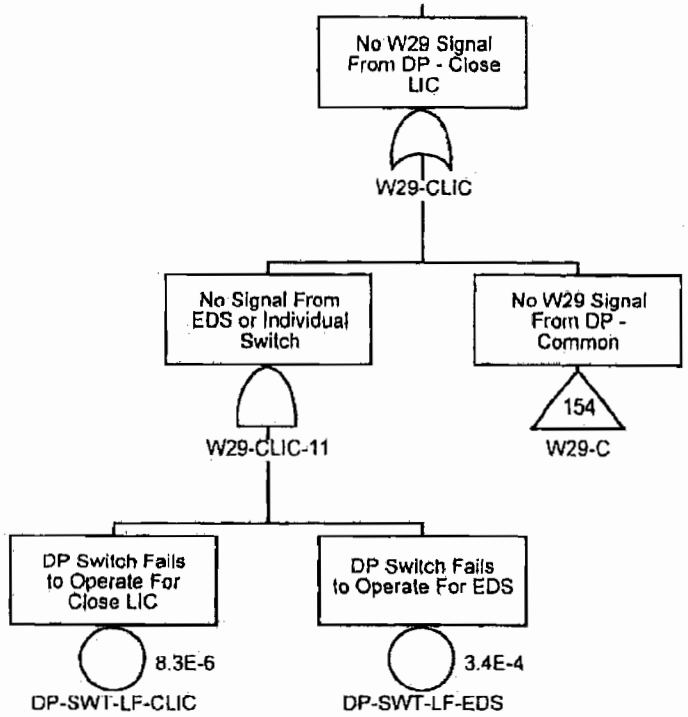

Confidential Treatment Requested by Transocean Holdings LLC

TRN-HCEC-00056604

No W29 Signal From DP - Close LIK

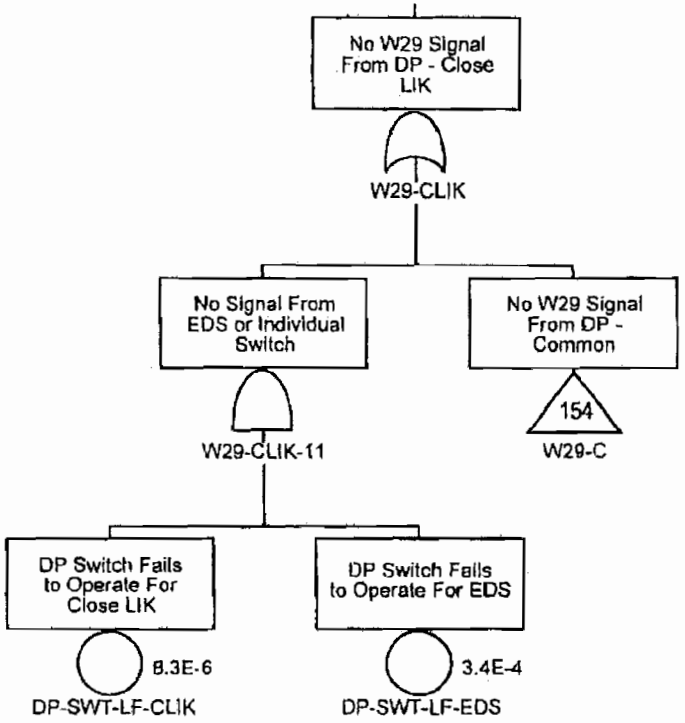

Confidential Treatment Requested by Transocean Holdings LLC

TRN-HCEC-00056605

No W29 Signal From DP - Close LOC

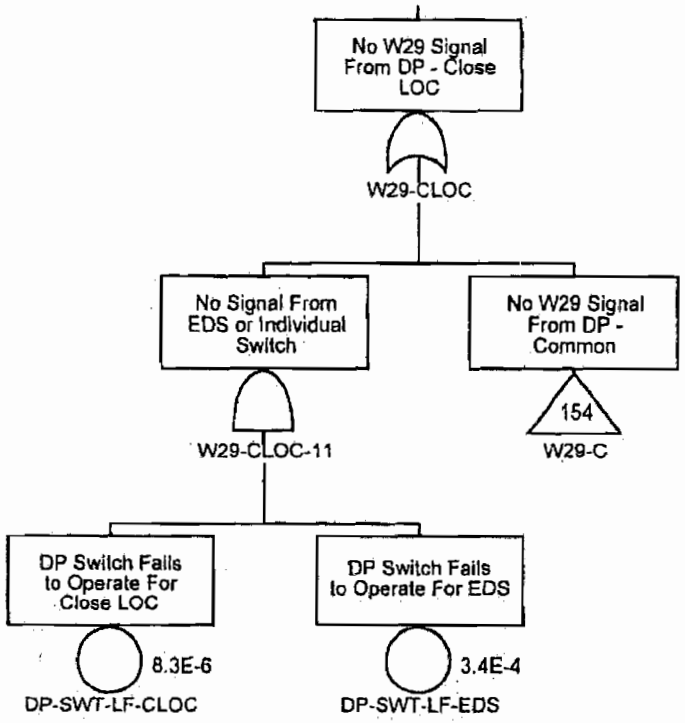

Confidential Treatment Requested by Transocean Holdings LLC

TRN-HCEC-00056606

No W29 Signal From DP - Close LOK

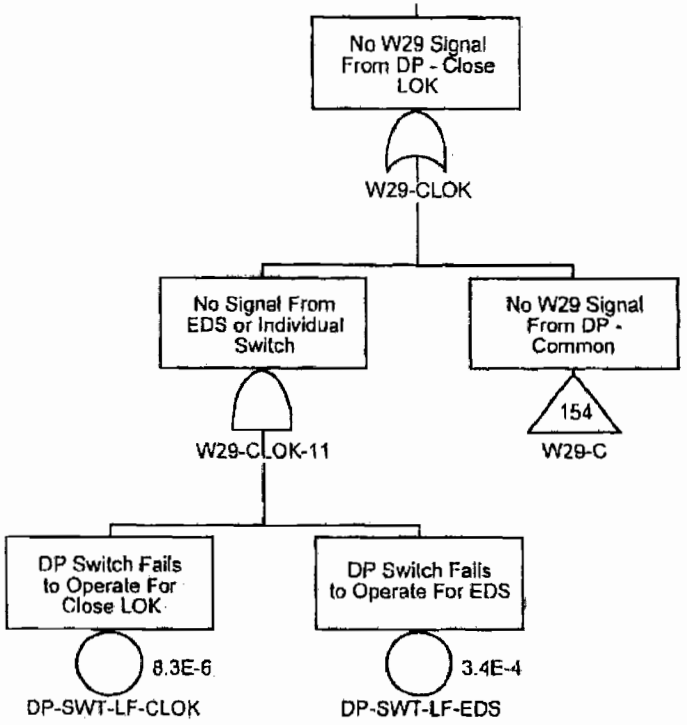

Confidential Treatment Requested by Transocean Holdings LLC

TRN-HCEC-00056607

No W29 Signal From DP - Close CSR

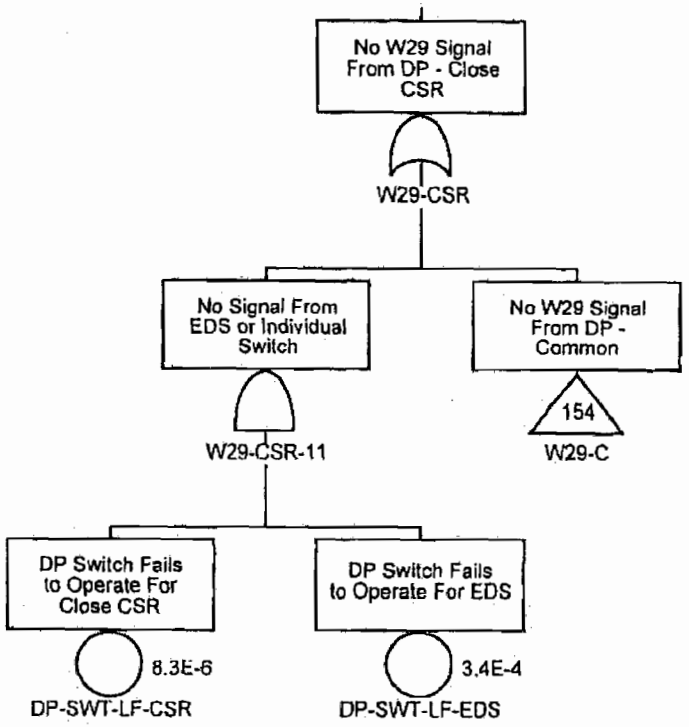

Confidential Treatment Requested by Transocean Holdings LLC

TRN-HCEC-00056608

No W29 Signal From DP - Close UIC

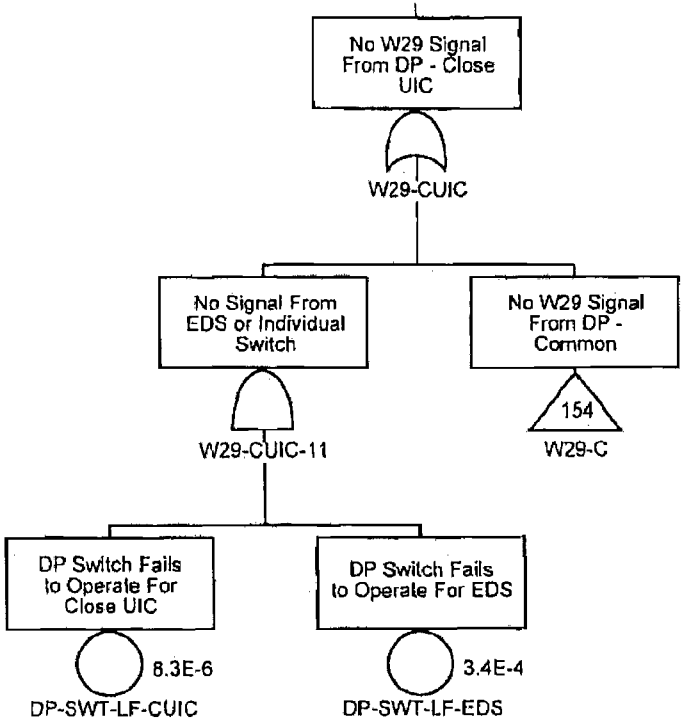

Confidential Treatment Requested by Transocean Holdings LLC

TRN-HCEC-00056609

No W29 Signal From DP - Close UIK

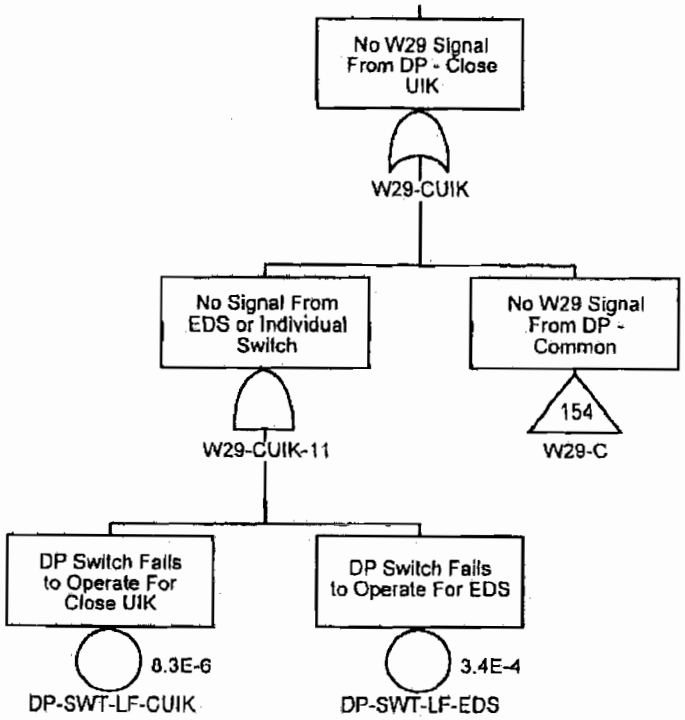

Confidential Treatment Requested by Transocean Holdings LLC

TRN-HCEC-00056610

No W29 Signal From DP - Close UOC

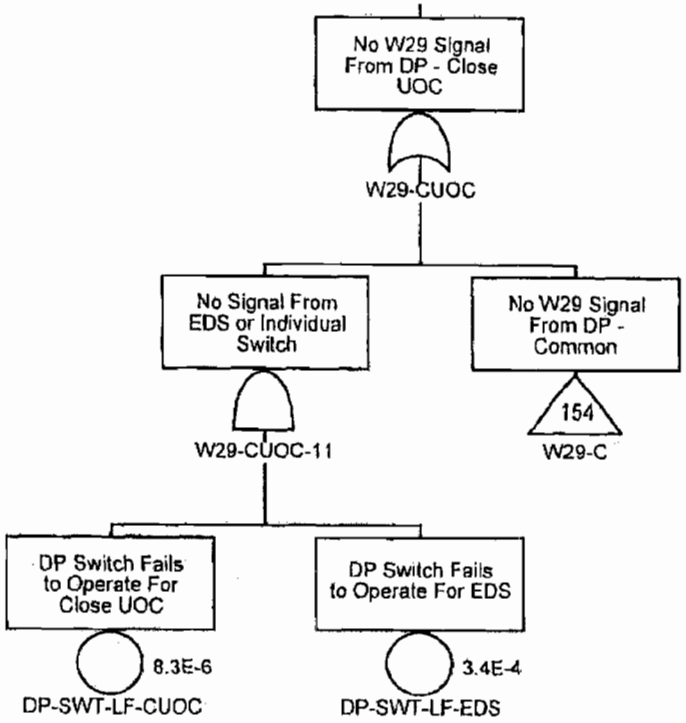

Confidential Treatment Requested by Transocean Holdings LLC

No W29 Signal From DP - Close UOK

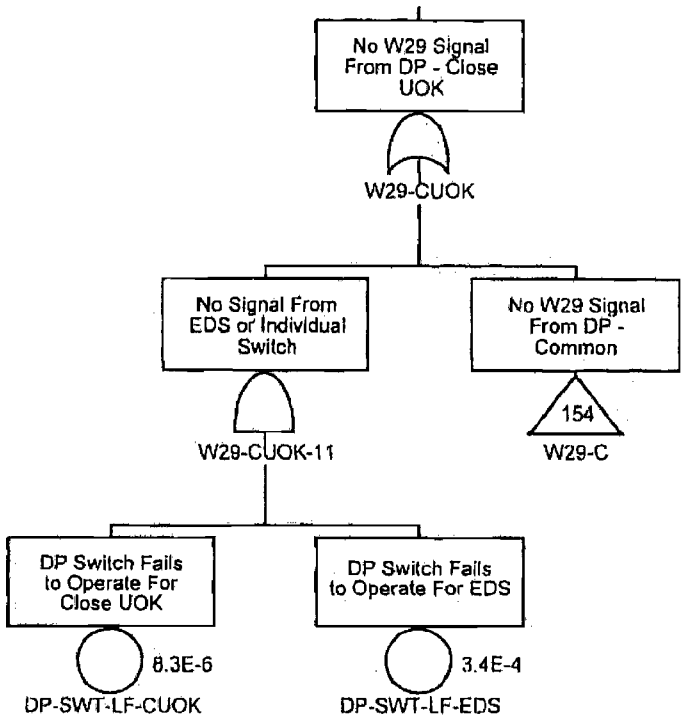

TRN-HCEC-00056611

Confidential Treatment Requested by Transocean Holdings LLC

TRN-HCEC-00056612

No W29 Signal From DP - Close LA

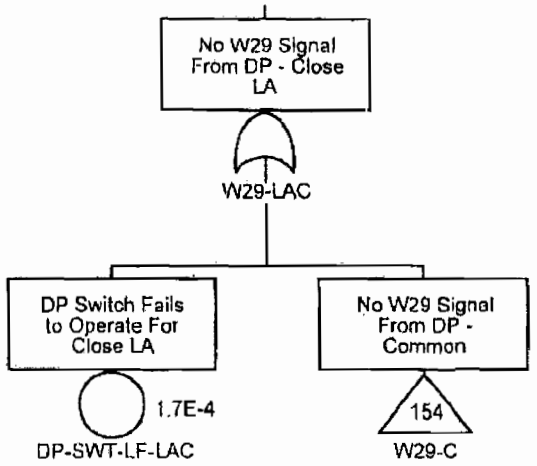

Confidential Treatment Requested by Transocean Holdings LLC

TRN-HCEC-00056613

No W29 Signal From DP - Close LPR

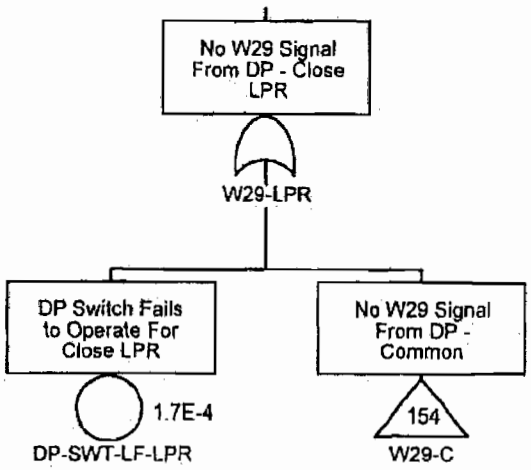

Confidential Treatment Requested by Transocean Holdings LLC

TRN-HCEC-00056614

No W29 Signal From DP - Close MPR

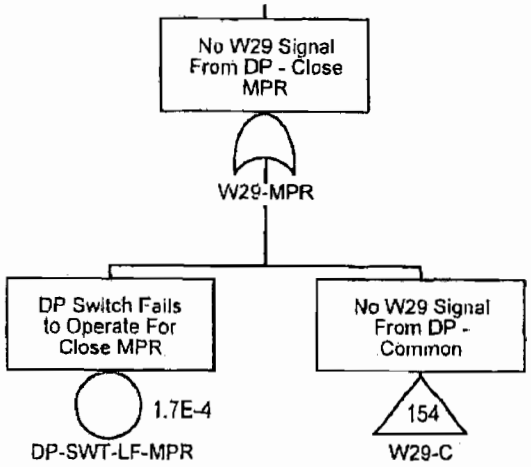

Confidential Treatment Requested by Transocean Holdings LLC

TRN-HCEC-00056615

No W29 Signal From DP - Open LIC

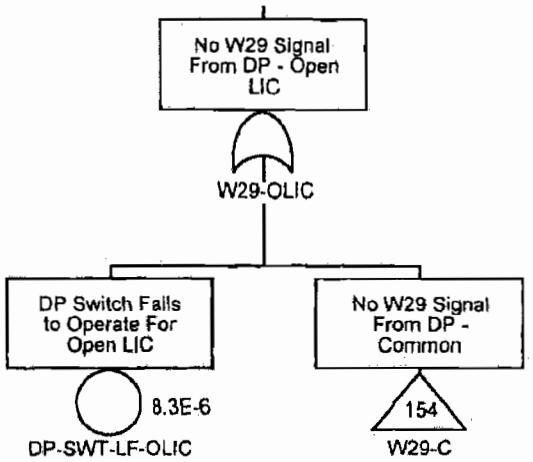

Confidential Treatment Requested by Transocean Holdings LLC

TRN-HCEC-00056616

No W29 Signal From DP - Open LIK

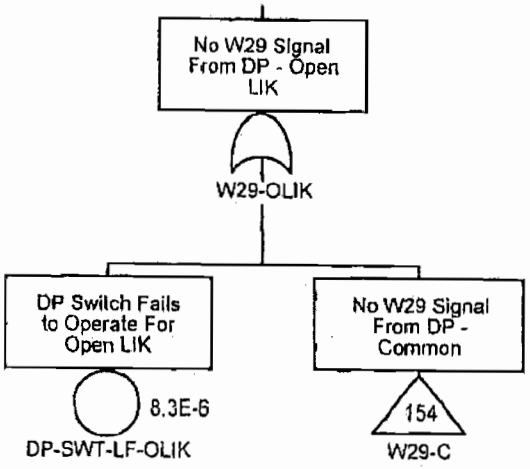

Confidential Treatment Requested by Transocean Holdings LLC

TRN-HCEC-00056617

No W29 Signal From DP - Open LOC

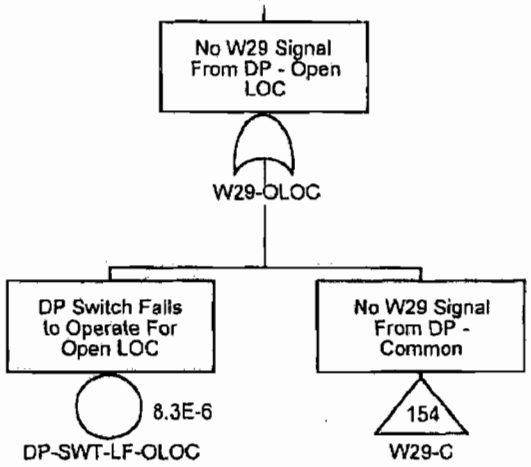

Confidential Treatment Requested by Transocean Holdings LLC

TRN-HCEC-00056618

No W29 Signal From DP - Open LOK

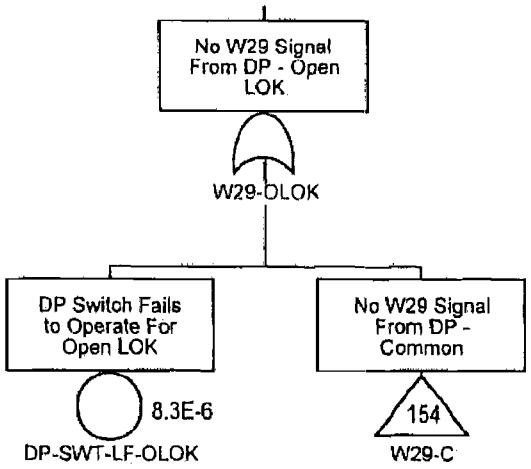

Confidential Treatment Requested by Transocean Holdings LLC

TRN-HCEC-00056619

No W29 Signal From DP - Open UIC

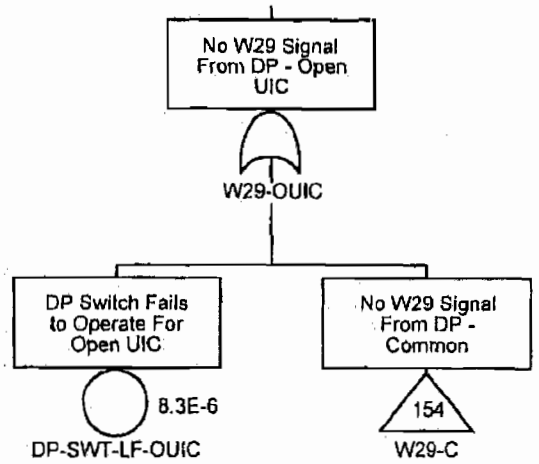

Confidential Treatment Requested by Transocean Holdings LLC

TRN-HCEC-00056620

No W29 Signal From DP - Open UIK

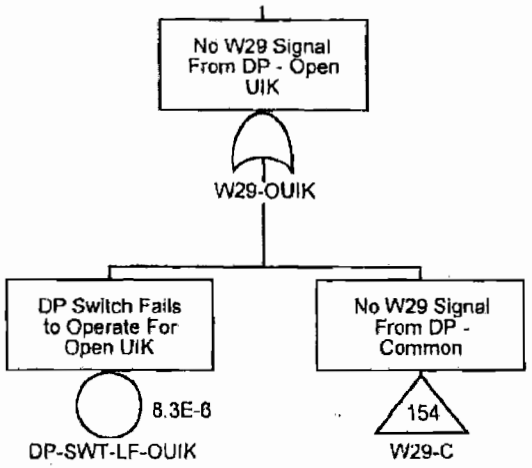

Confidential Treatment Requested by Transocean Holdings LLC

TRN-HCEC-00056621

No W29 Signal From DP - Open UOC

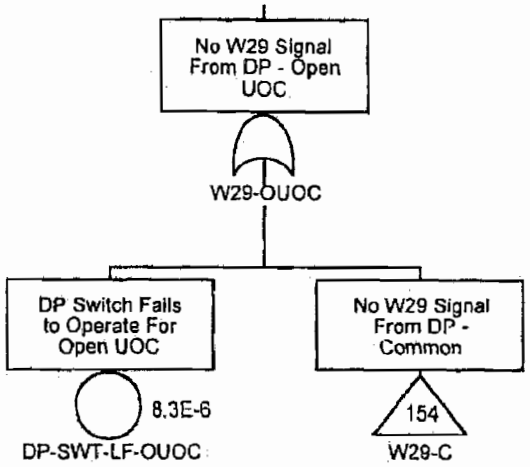

Confidential Treatment Requested by Transocean Holdings LLC

TRN-HCEC-00056622

No W29 Signal From DP - Open UOK

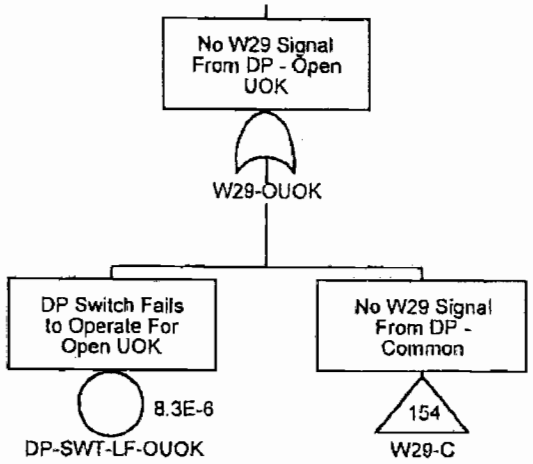

Confidential Treatment Requested by Transocean Holdings LLC

TRN-HCEC-00056623

No W29 Signal From DP - LMRP Pri. Dis.

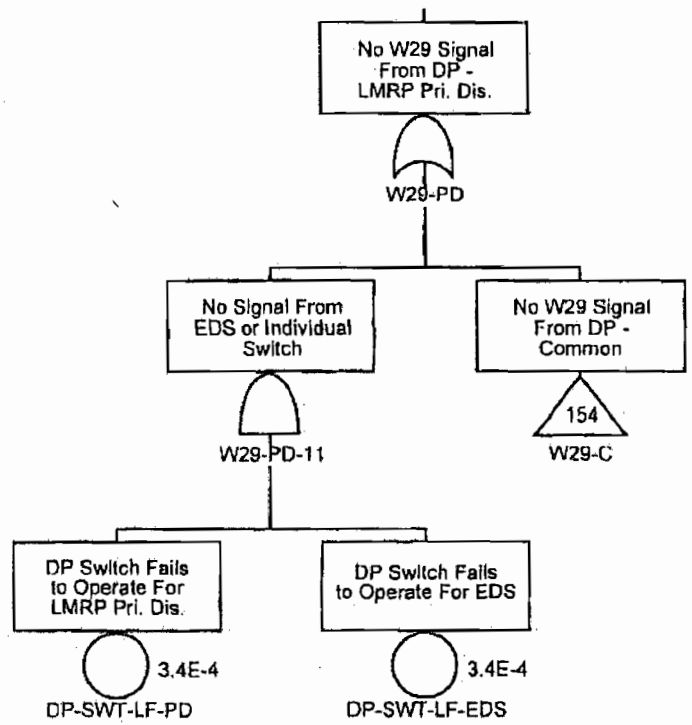

Confidential Treatment Requested by Transocean Holdings LLC

TRN-HCEC-00056624

No W29 Signal From DP - Pod Select

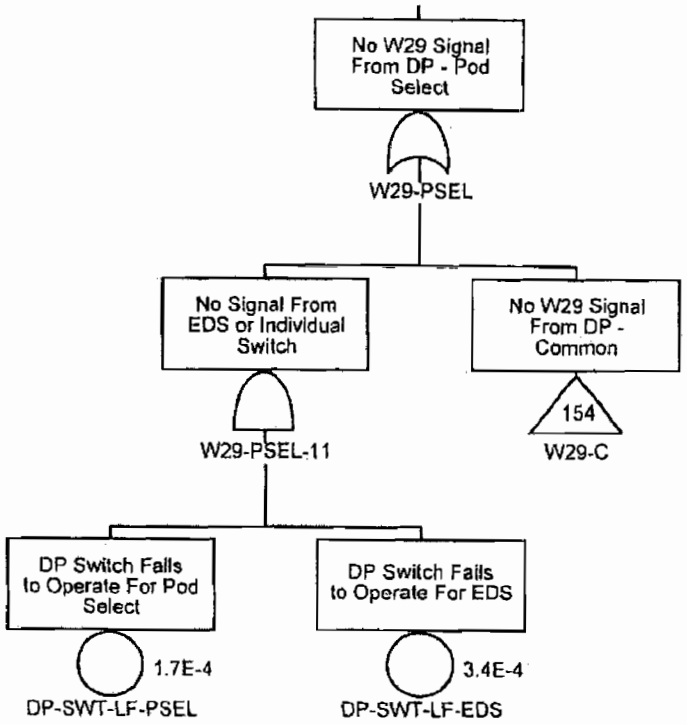

Confidential Treatment Requested by Transocean Holdings LLC

TRN-HCEC-00056625

No W29 Signal From DP - LMRP Sec. Dis.

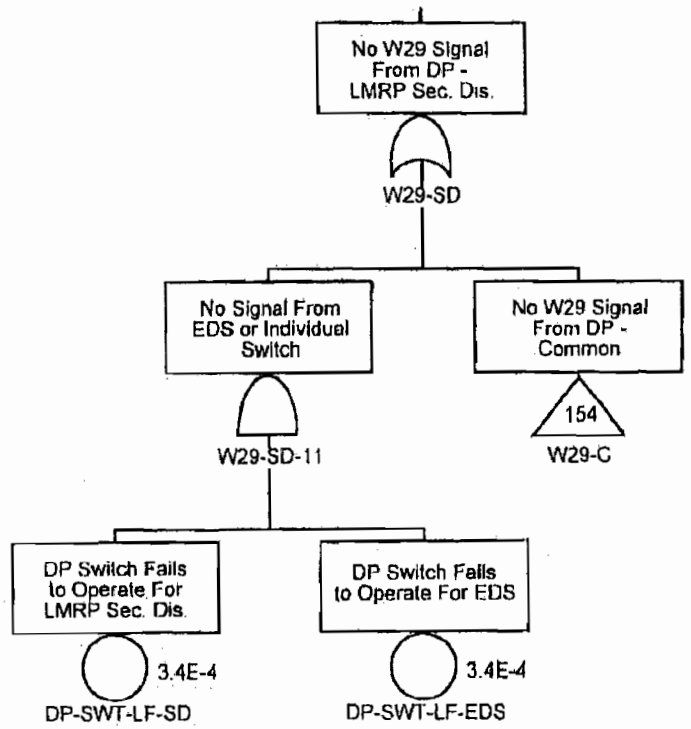

Confidential Treatment Requested by Transocean Holdings LLC

TRN-HCEC-00056626

No W29 Signal From DP - Close UA

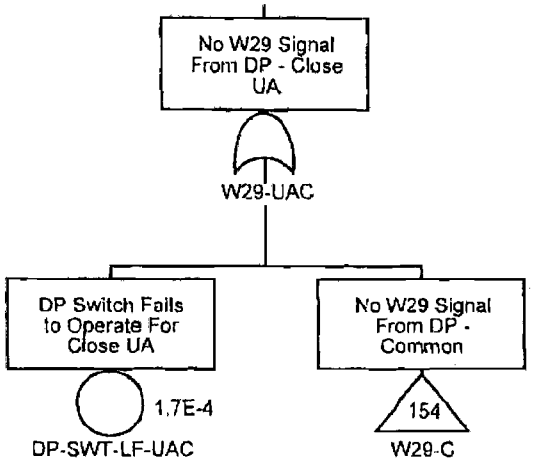

Confidential Treatment Requested by Transocean Holdings LLC

TRN-HCEC-00056627

No W29 Signal From DP - HP Close USR

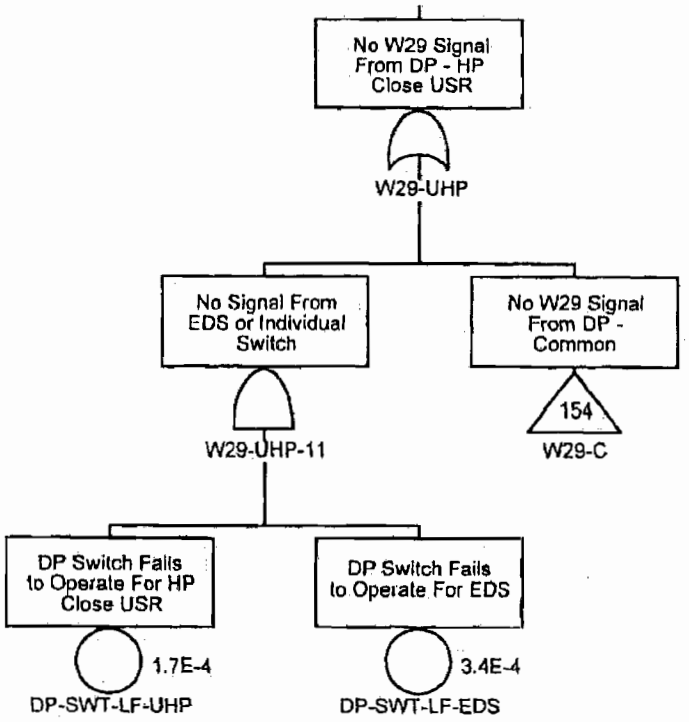

Confidential Treatment Requested by Transocean Holdings LLC

TRN-HCEC-00056628

No W29 Signal From DP - Close UPR

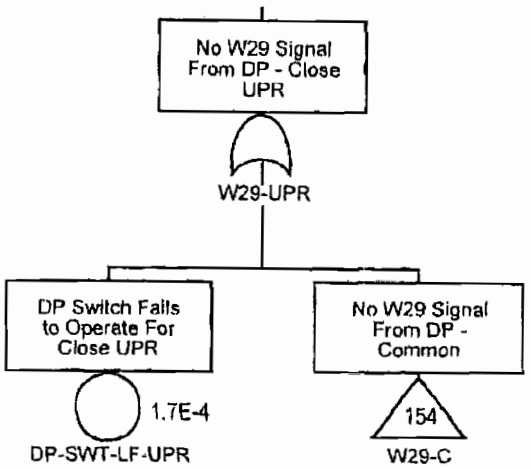

Confidential Treatment Requested by Transocean Holdings LLC

TRN-HCEC-00056629

No W29 Signal From DP - Close USR

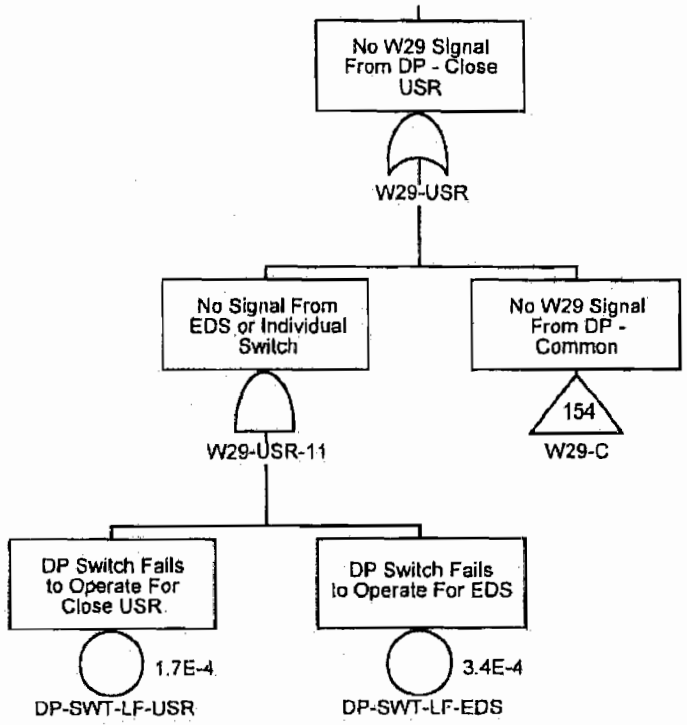

Confidential Treatment Requested by Transocean Holdings LLC

TRN-HCEC-00056630

No W29 Signal From Driller's Panel - Open Yellow Conduit Supp

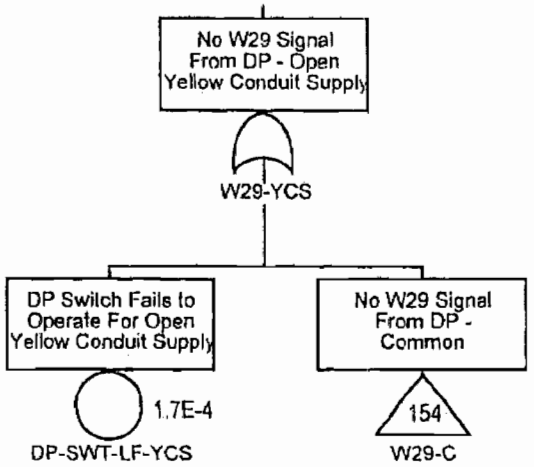

Confidential Treatment Requested by Transocean Holdings LLC

TRN-HCEC-00056631

No W29 Signal From Driller's Panel - Open Yellow HL Supply

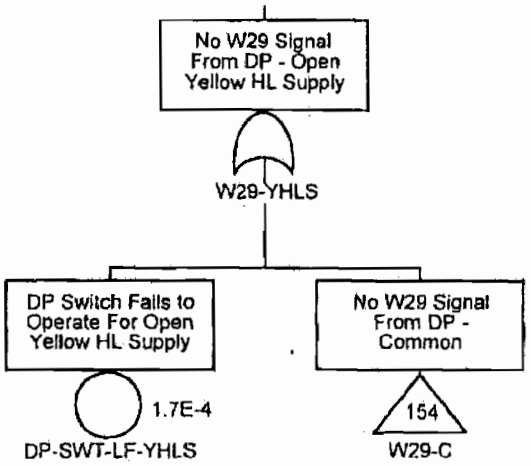

Confidential Treatment Requested by Transocean Holdings LLC

TRN-HCEC-00056632

Power Not Available From CDP-A W3

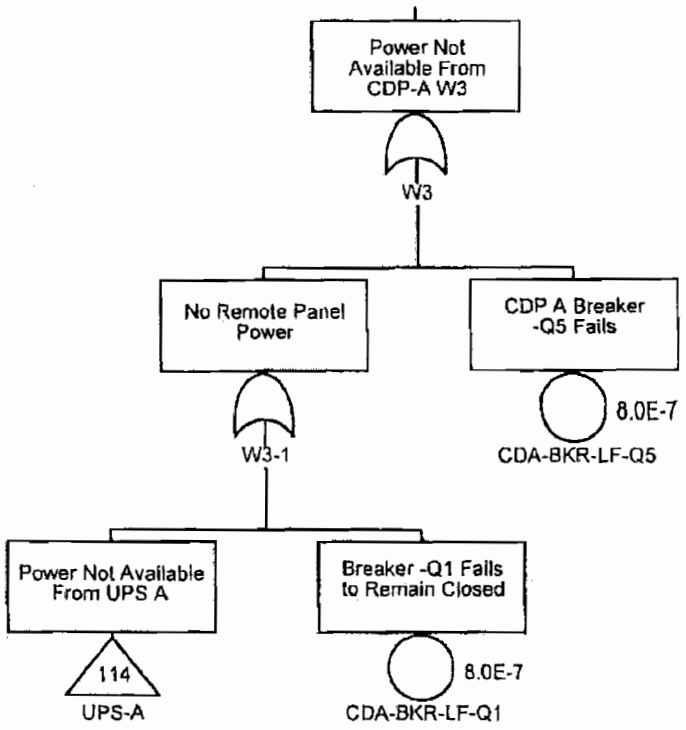

Confidential Treatment Requested by Transocean Holdings LLC

TRN-HCEC-00056633

No W30 Signal From Toolpusher's Panel - Open Blue Conduit Supply

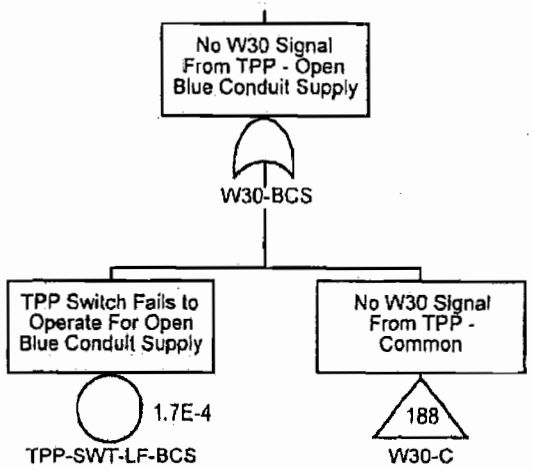

Confidential Treatment Requested by Transocean Holdings LLC

TRN-HCEC-00056634

No W30 Signal From Toolpusher's Panel - Open Blue HL Supply

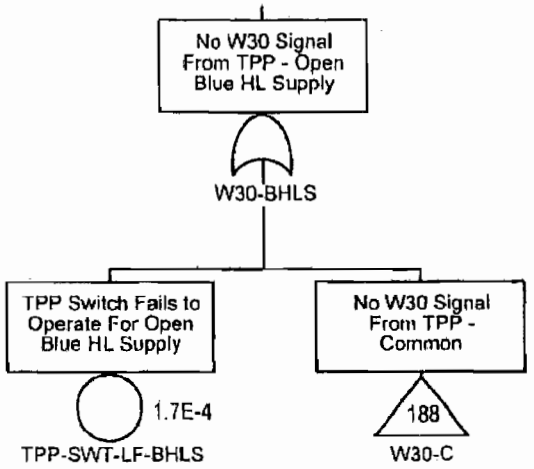

Confidential Treatment Requested by Transocean Holdings LLC

TRN-HCEC-00056635

No W30 Signal From TPP - Common

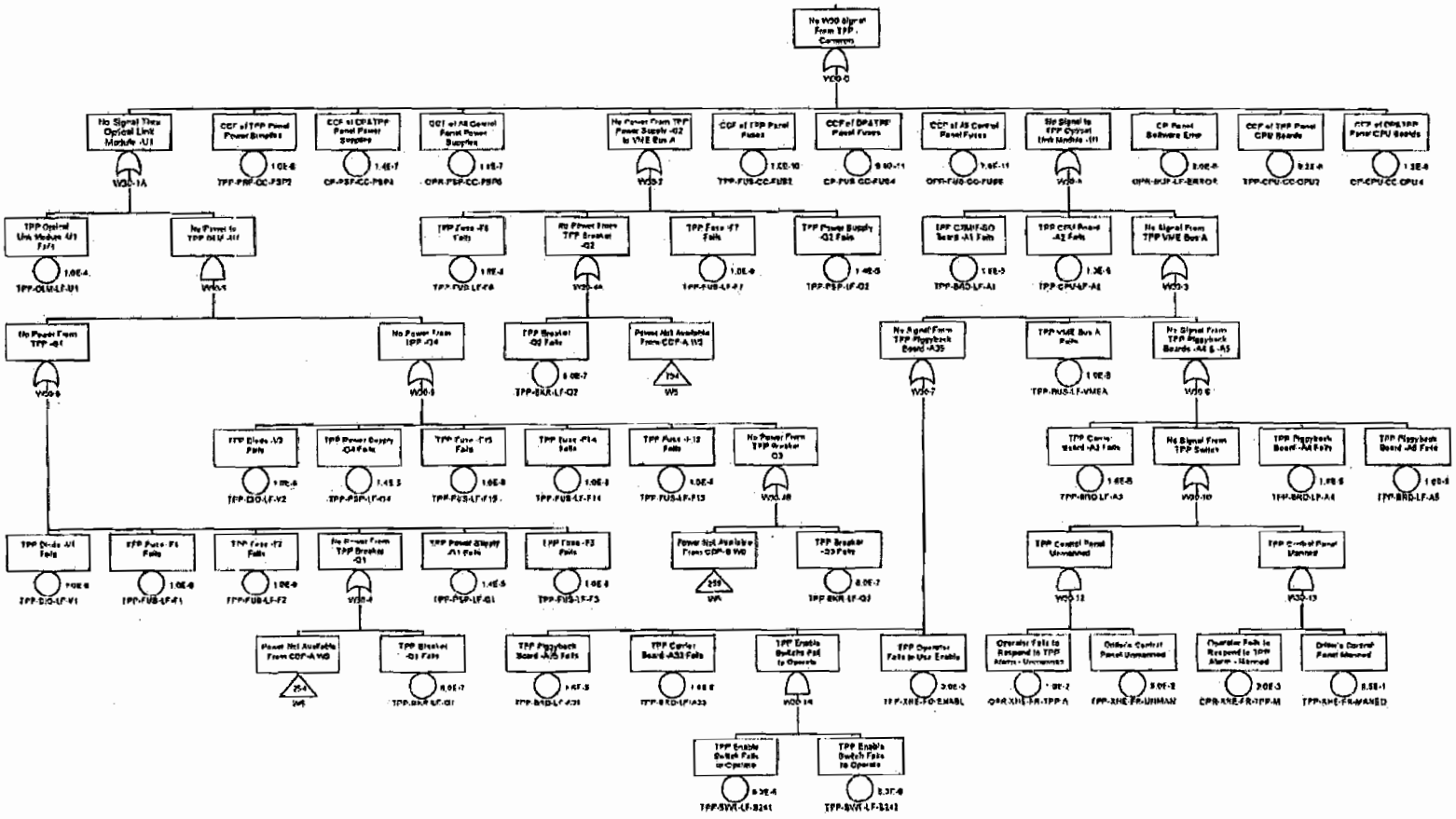

Confidential Treatment Requested by Transocean Holdings LLC

TRN-HCEC-00056636

No W30 Signal From TPP - HP Close CSR

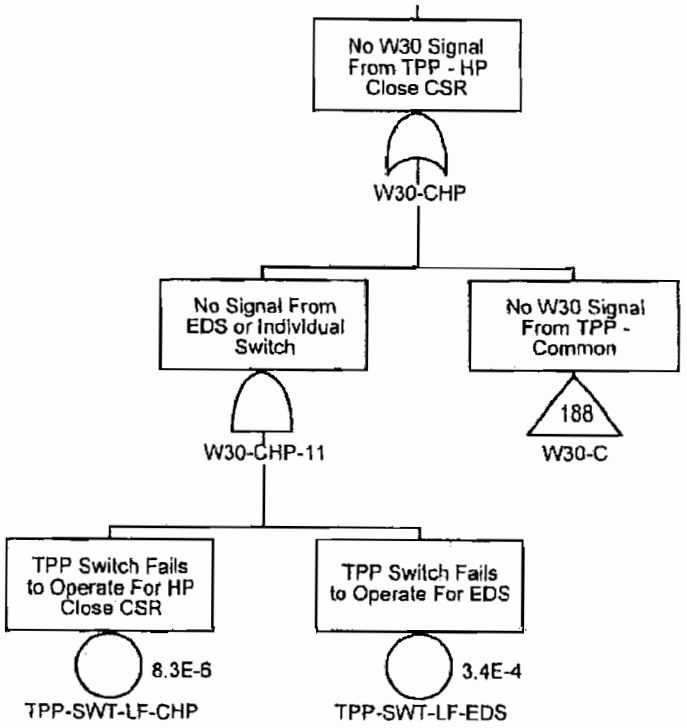

Confidential Treatment Requested by Transocean Holdings LLC

TRN-HCEC-00056637

No W30 Signal From TPP - Close LIC

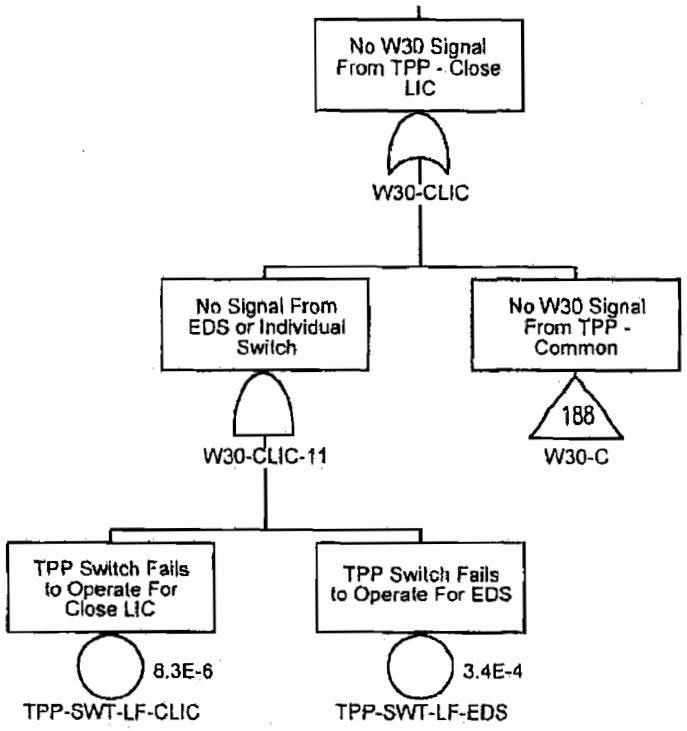

Confidential Treatment Requested by Transocean Holdings LLC

TRN-HCEC-00056638

No W30 Signal From TPP - Close LIK

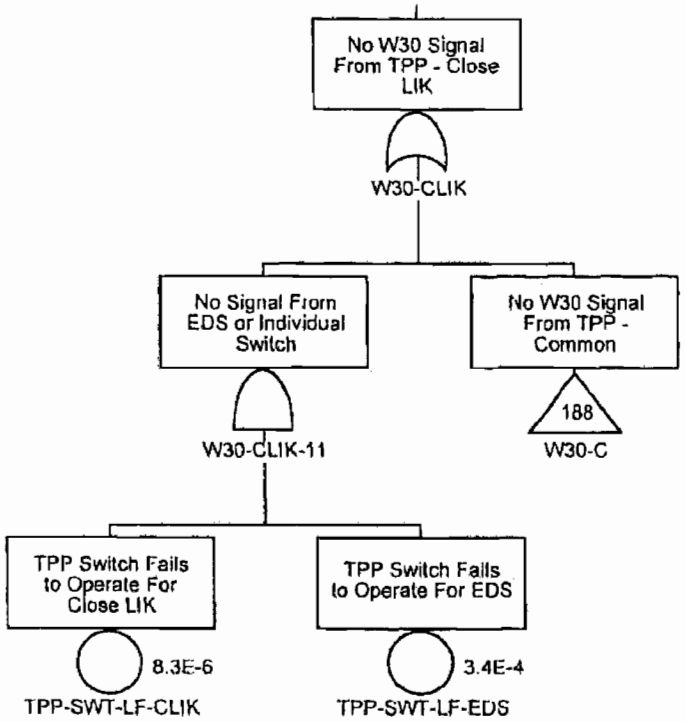

Confidential Treatment Requested by Transocean Holdings LLC

No W30 Signal From TPP - Close LOC

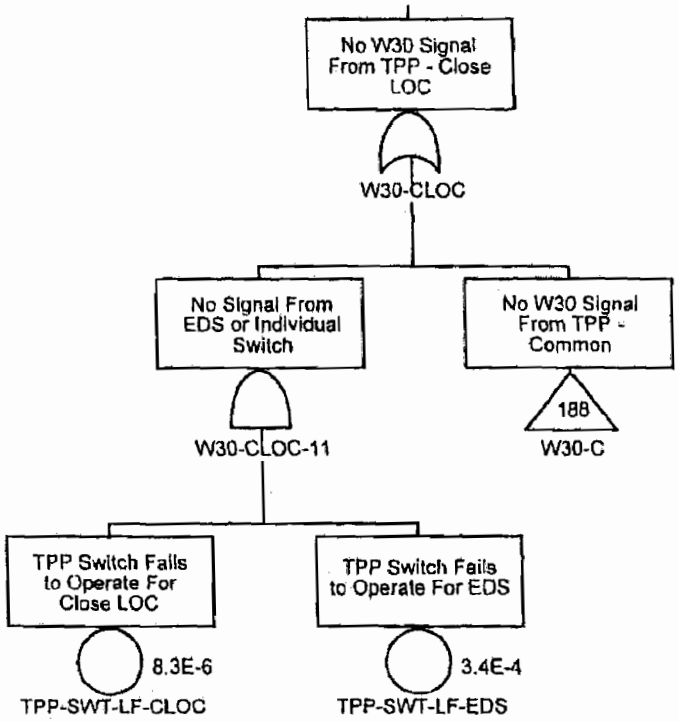

TRN-HCEC-00056639

Confidential Treatment Requested by Transocean Holdings LLC

TRN-HCEC-00056640

No W30 Signal From TPP - Close LOK

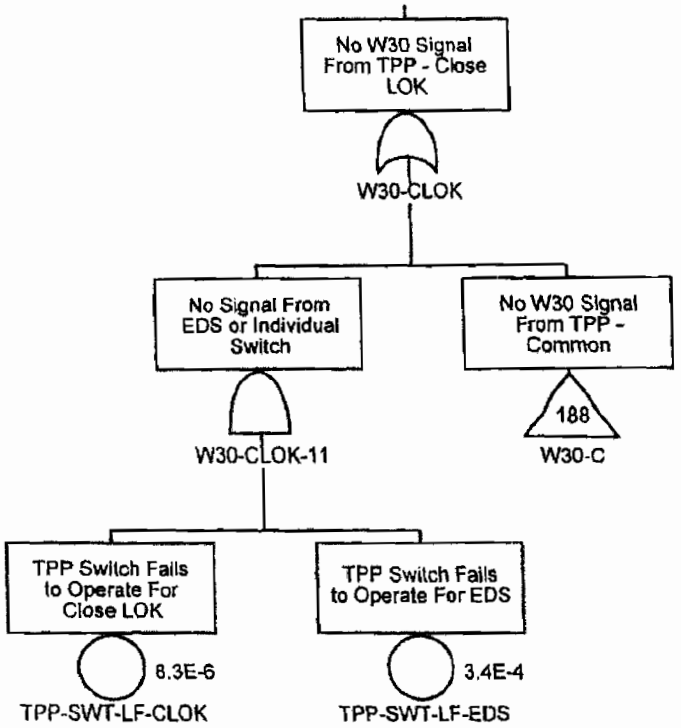

Confidential Treatment Requested by Transocean Holdings LLC

TRN-HCEC-00056641

No W30 Signal From TPP - Close CSR

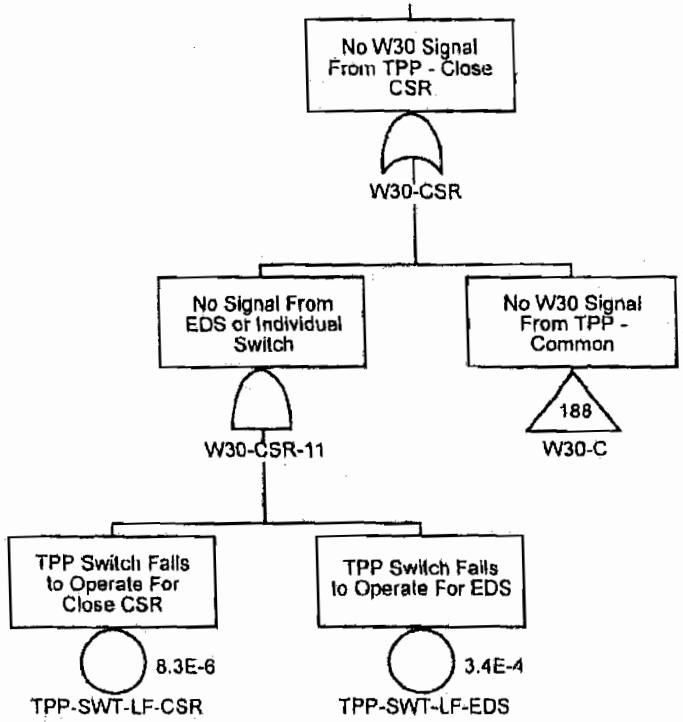

Confidential Treatment Requested by Transocean Holdings LLC

TRN-HCEC-00056642

No W30 Signal From TPP - Close UIC

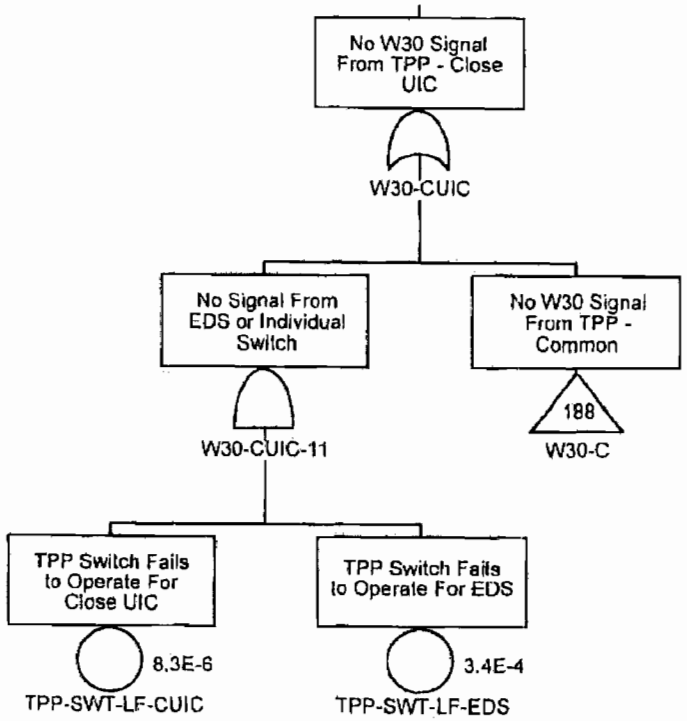

Confidential Treatment Requested by Transocean Holdings LLC

TRN-HCEC-00056643

No W30 Signal From TPP - Close UIK

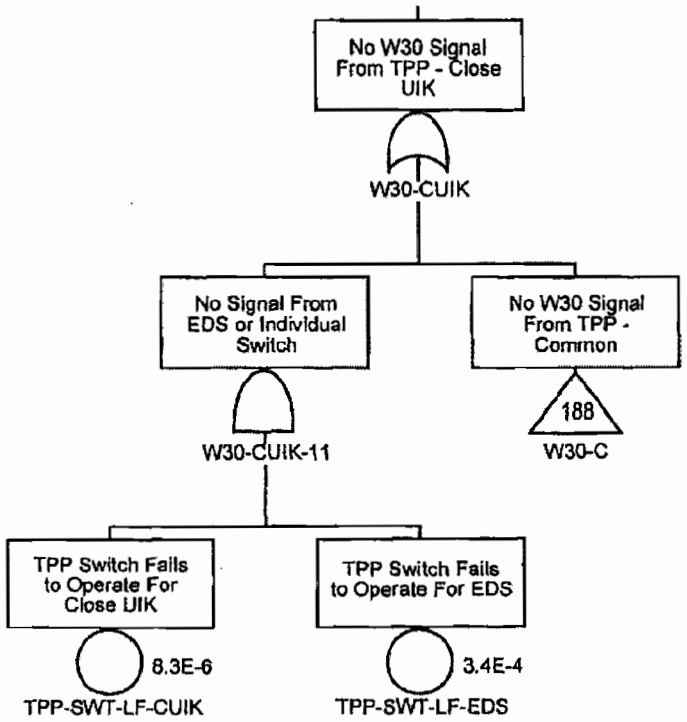

Confidential Treatment Requested by Transocean Holdings LLC

TRN-HCEC-00056644

No W30 Signal From TPP - Close UOC

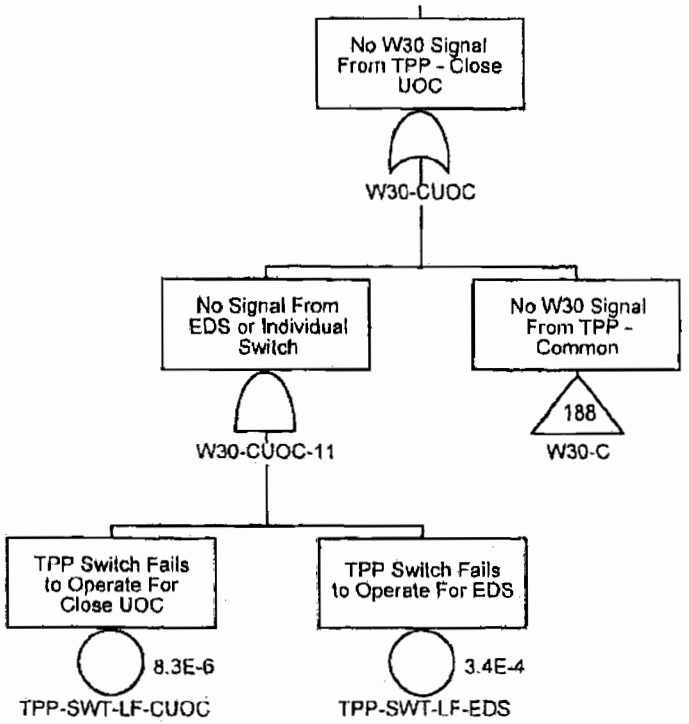

Confidential Treatment Requested by Transocean Holdings LLC

TRN-HCEC-00056645

No W30 Signal From TPP - Close UOK

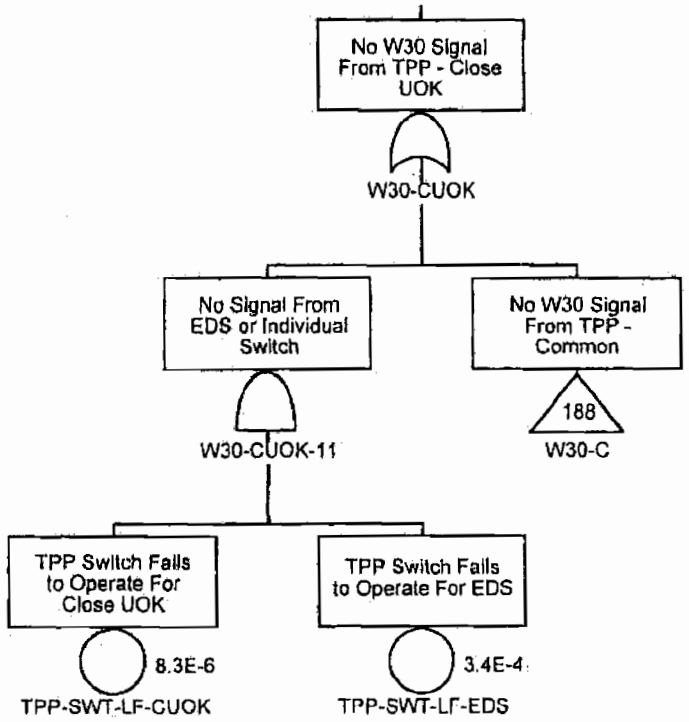

Confidential Treatment Requested by Transocean Holdings LLC

TRN-HCEC-00056646

No W30 Signal From TPP - Close LA

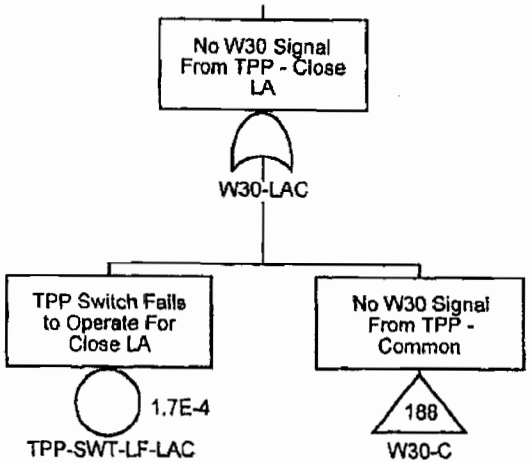

Confidential Treatment Requested by Transocean Holdings LLC

TRN-HCEC-00056647

No W30 Signal From TPP - Close LPR

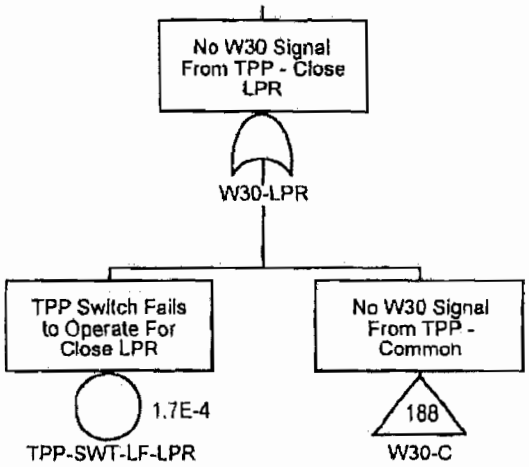

Confidential Treatment Requested by Transocean Holdings LLC

TRN-HCEC-00056648

No W30 Signal From TPP - Close MPR

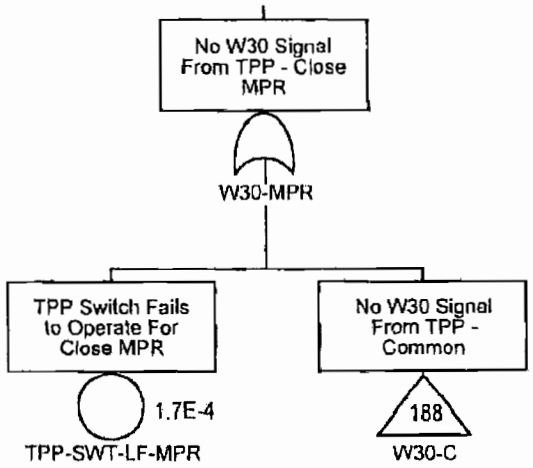

Confidential Treatment Requested by Transocean Holdings LLC

TRN-HCEC-00056649

No W30 Signal From TPP - Open LIC

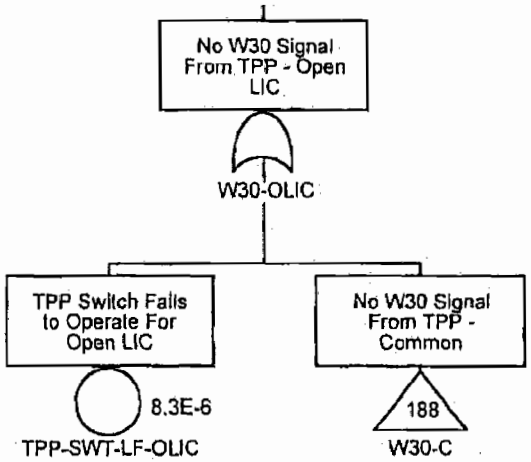

Confidential Treatment Requested by Transocean Holdings LLC

TRN-HCEC-00056650

No W30 Signal From TPP - Open LIK

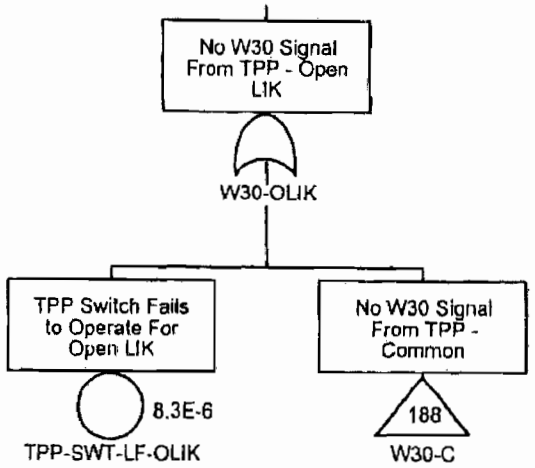

Confidential Treatment Requested by Transocean Holdings LLC

TRN-HCEC-00056651

No W30 Signal From TPP - Open LOC

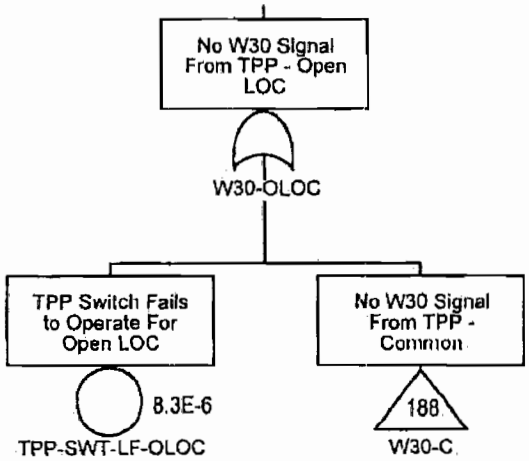

Confidential Treatment Requested by Transocean Holdings LLC

TRN-HCEC-00056652

No W30 Signal From TPP - Open LOK

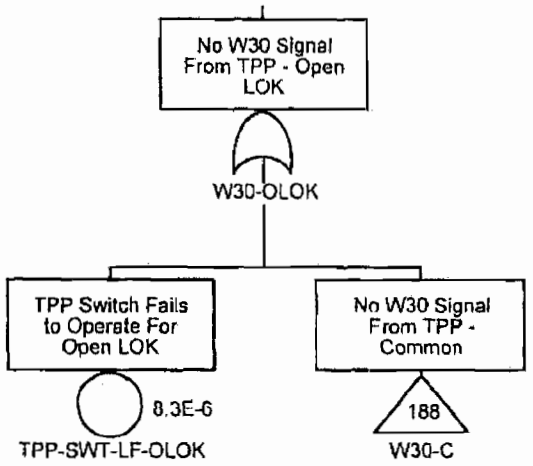

Confidential Treatment Requested by Transocean Holdings LLC

TRN-HCEC-00056653

No W30 Signal From TPP - Open UIC

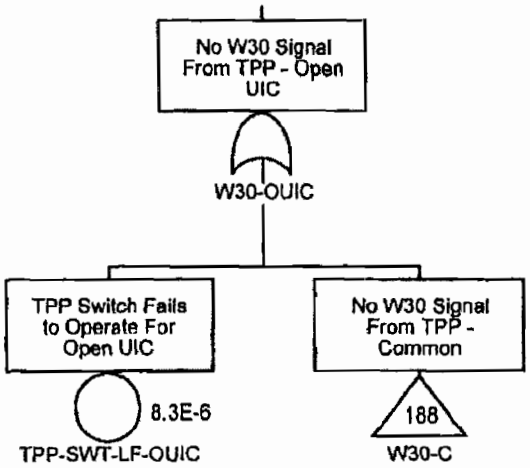

Confidential Treatment Requested by Transocean Holdings LLC

TRN-HCEC-00056654

No W30 Signal From TPP - Open UIK

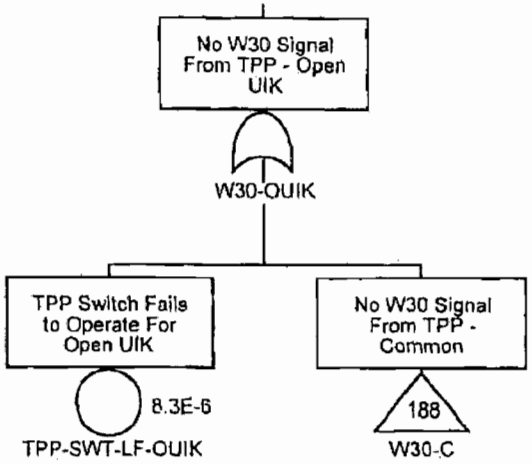

Confidential Treatment Requested by Transocean Holdings LLC

TRN-HCEC-00056655

No W30 Signal From TPP - Open UOC

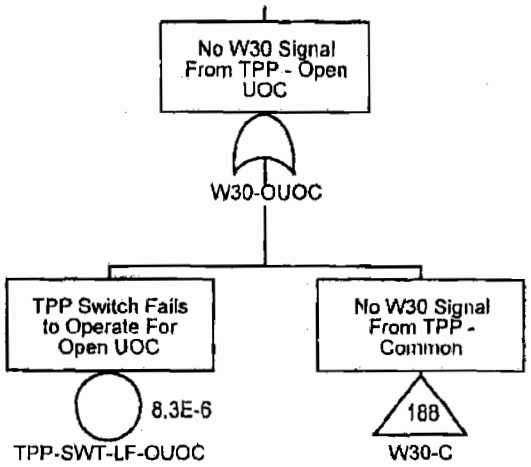

Confidential Treatment Requested by Transocean Holdings LLC

TRN-HCEC-00056656

No W30 Signal From TPP - Open UOK

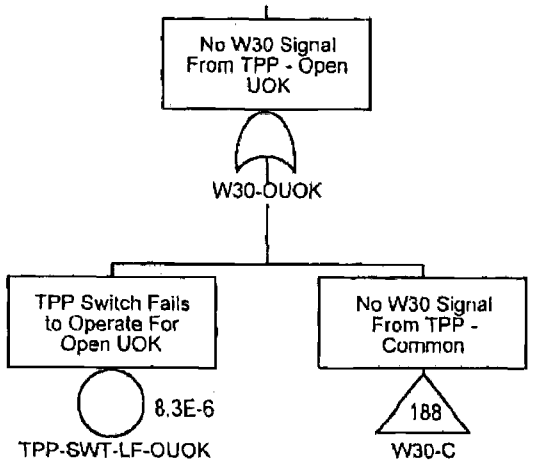

Confidential Treatment Requested by Transocean Holdings LLC

TRN-HCEC-00056657

No W30 Signal From TPP - LMRP Pri. Dis.

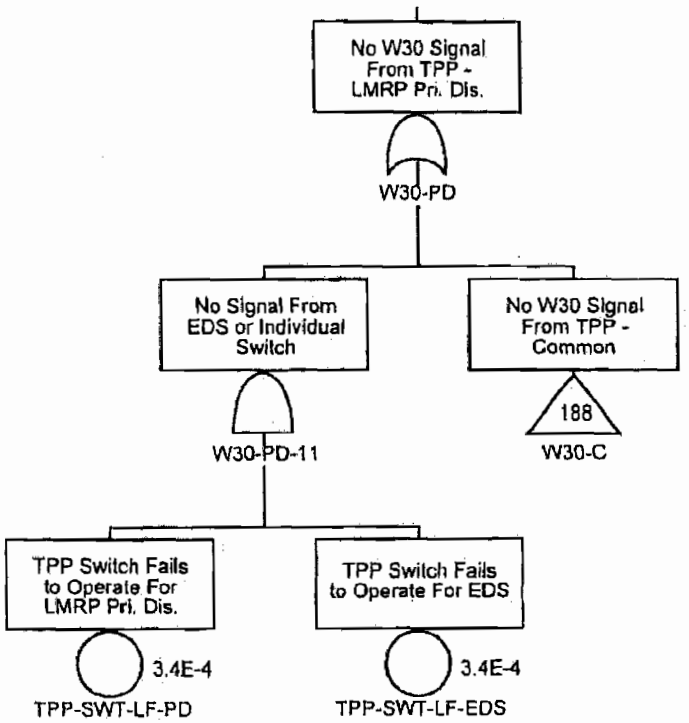

Confidential Treatment Requested by Transocean Holdings LLC

TRN-HCEC-00056658

No W30 Signal From TPP - Pod Select

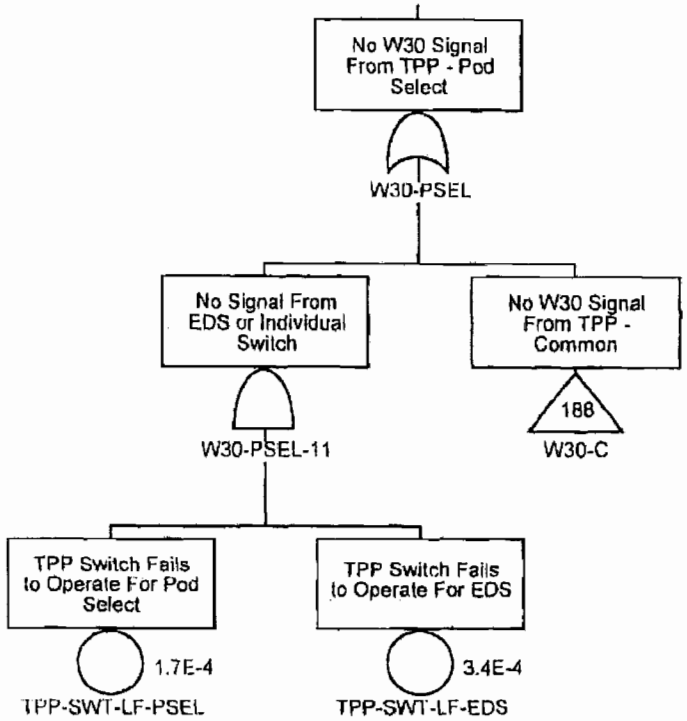

Confidential Treatment Requested by Transocean Holdings LLC

TRN-HCEC-00056659

No W30 Signal From TPP - LMRP Sec. Dis.

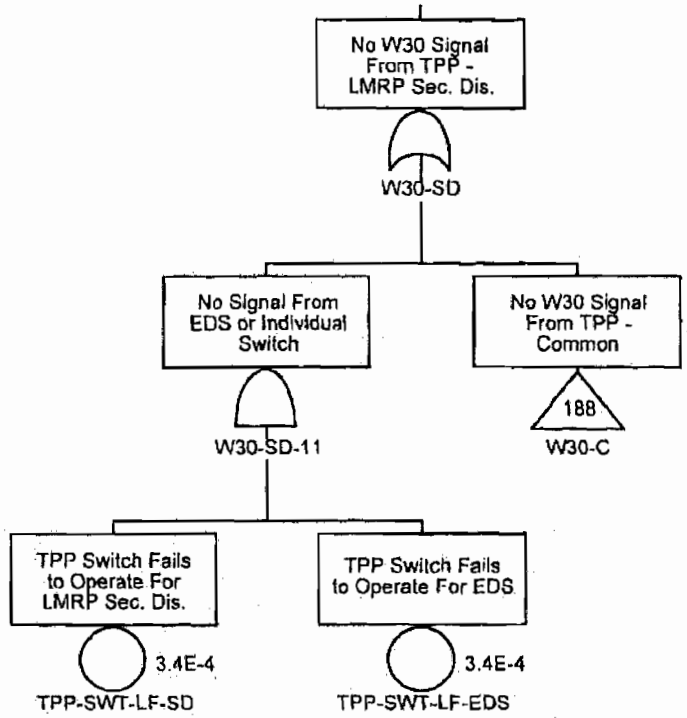

Confidential Treatment Requested by Transocean Holdings LLC

TRN-HCEC-00056660

No W30 Signal From TPP - Close UA

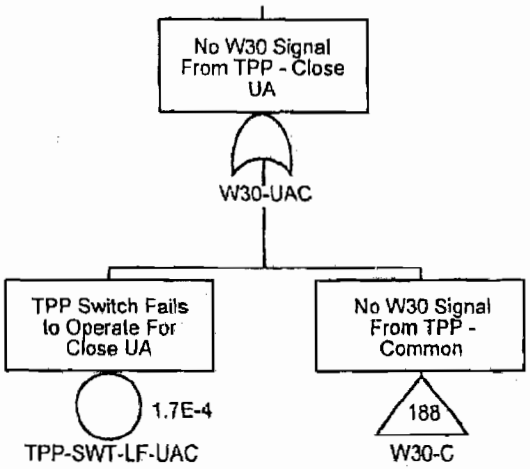

Confidential Treatment Requested by Transocean Holdings LLC

TRN-HCEC-00056661

No W30 Signal From TPP - HP Close USR

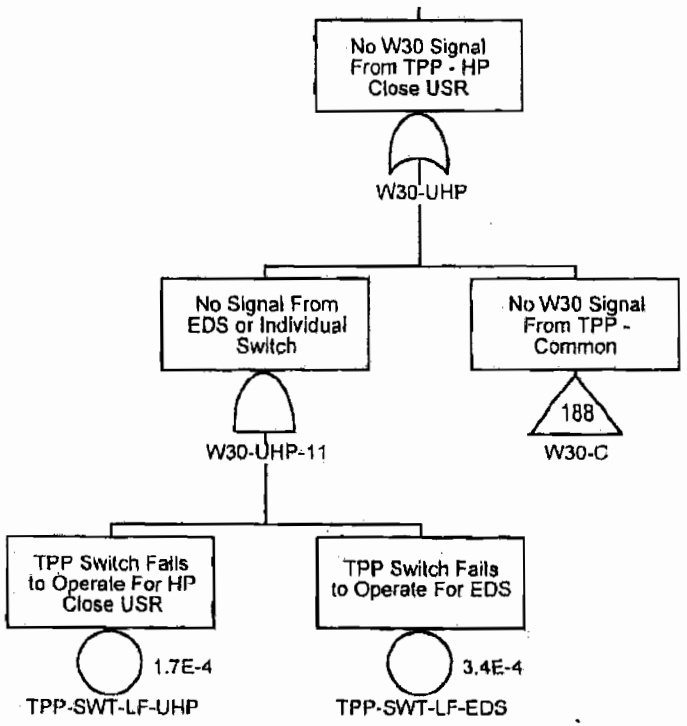

Confidential Treatment Requested by Transocean Holdings LLC

TRN-HCEC-00056662

No W30 Signal From TPP - Close UPR

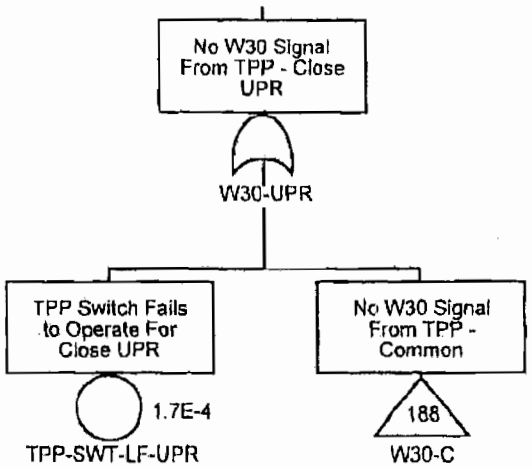

Confidential Treatment Requested by Transocean Holdings LLC

TRN-HCEC-00056663

No W30 Signal From TPP - Close USR

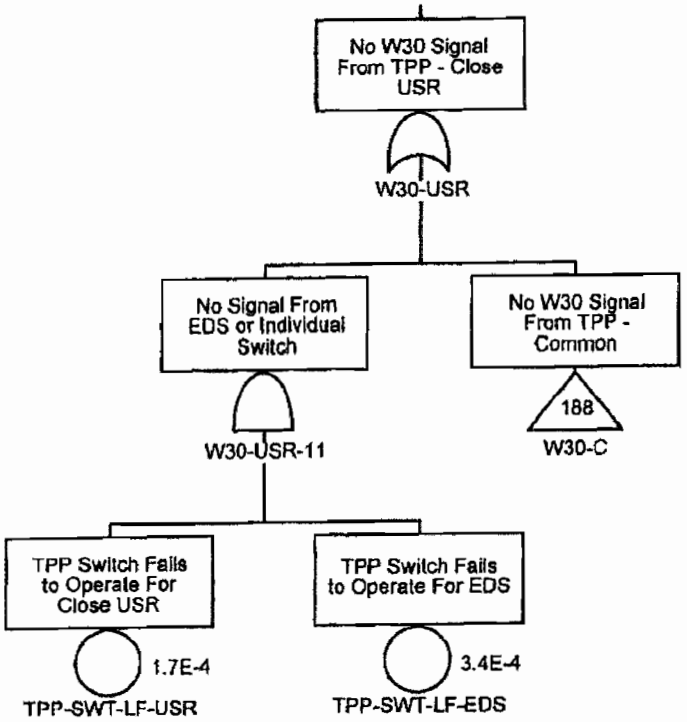

Confidential Treatment Requested by Transocean Holdings LLC

TRN-HCEC-00056664

No W30 Signal From Toolpusher's Panel - Open Yellow Conduit S

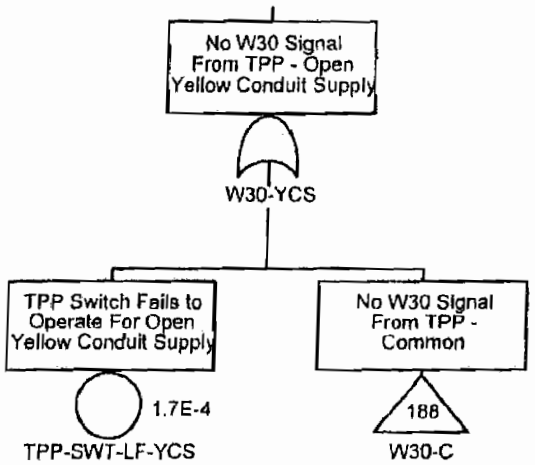

Confidential Treatment Requested by Transocean Holdings LLC

TRN-HCEC-00056665

No W30 Signal From Toolpusher's Panel - Open Yellow HL Supply

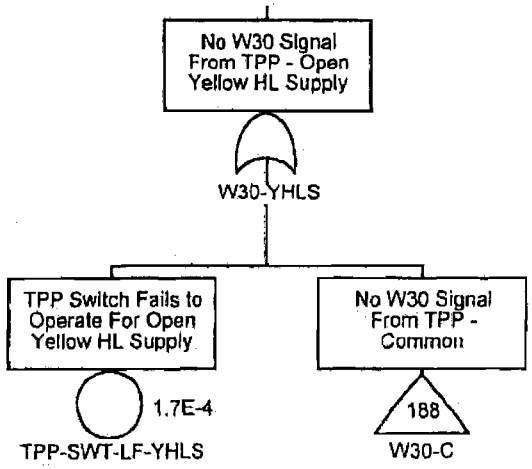

Confidential Treatment Requested by Transocean Holdings LLC

TRN-HCEC-00056666

No W31 Signal From Toolpusher's Panel - Open Blue Conduit Supply

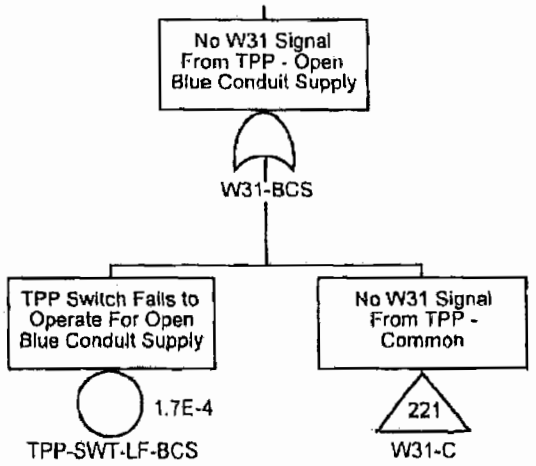

Confidential Treatment Requested by Transocean Holdings LLC

TRN-HCEC-00056667

No W31 Signal From Toolpusher's Panel - Open Blue HL Supply

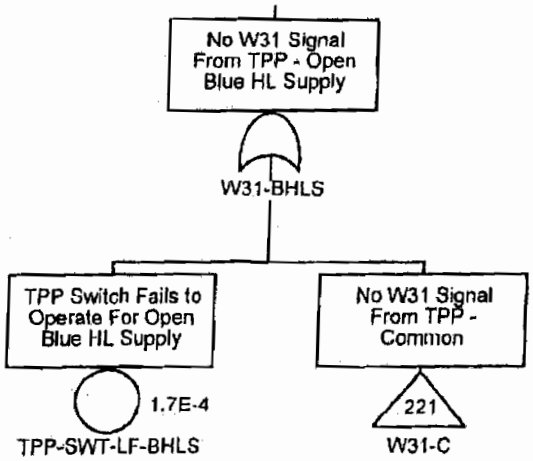

Confidential Treatment Requested by Transocean Holdings LLC

TRN-HCEC-00056668

No W31 Signal From TPP - Common

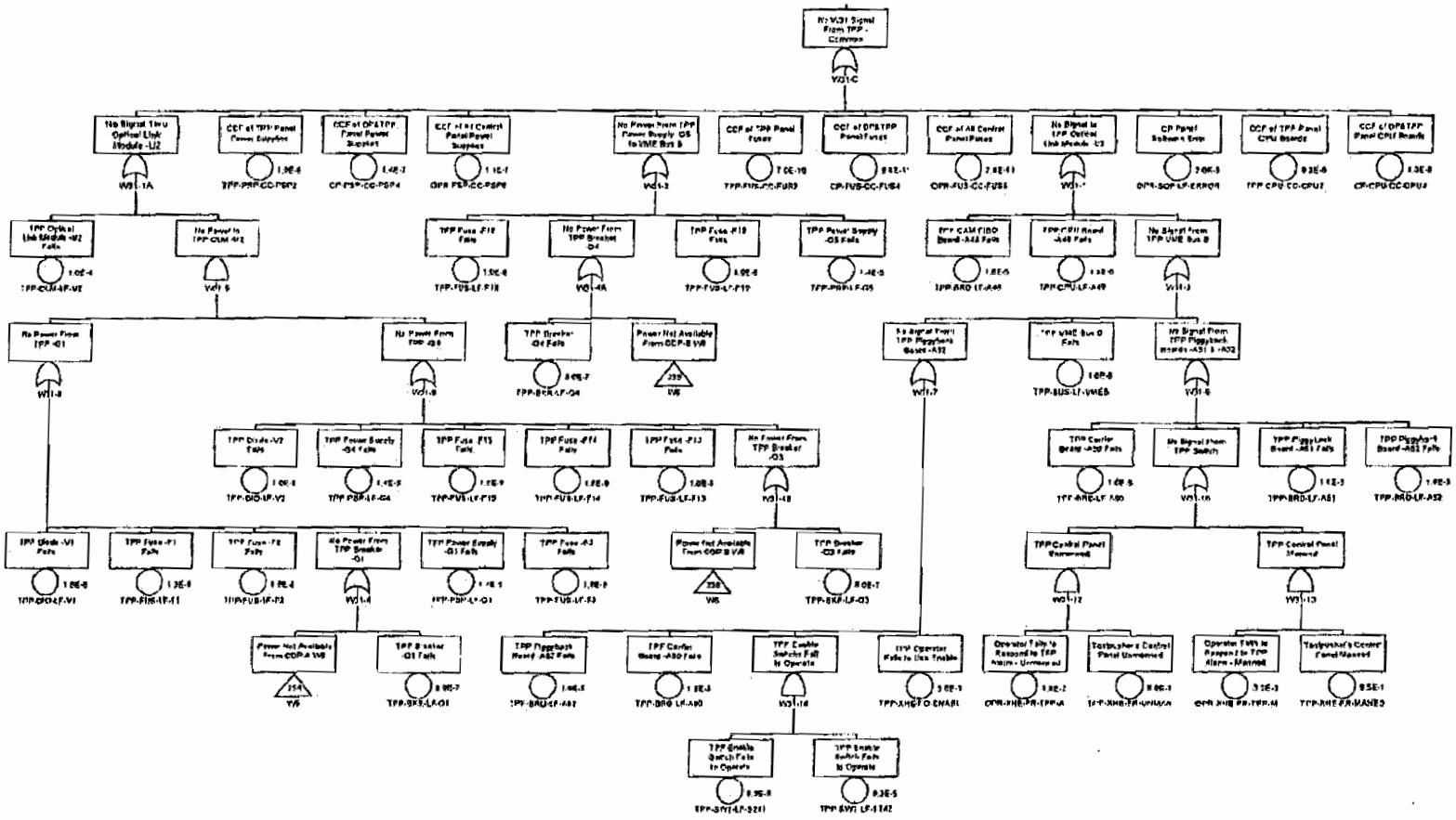

Confidential Treatment Requested by Transocean Holdings LLC

TRN-HCEC-00056669

No W31 Signal From TPP - HP Close CSR

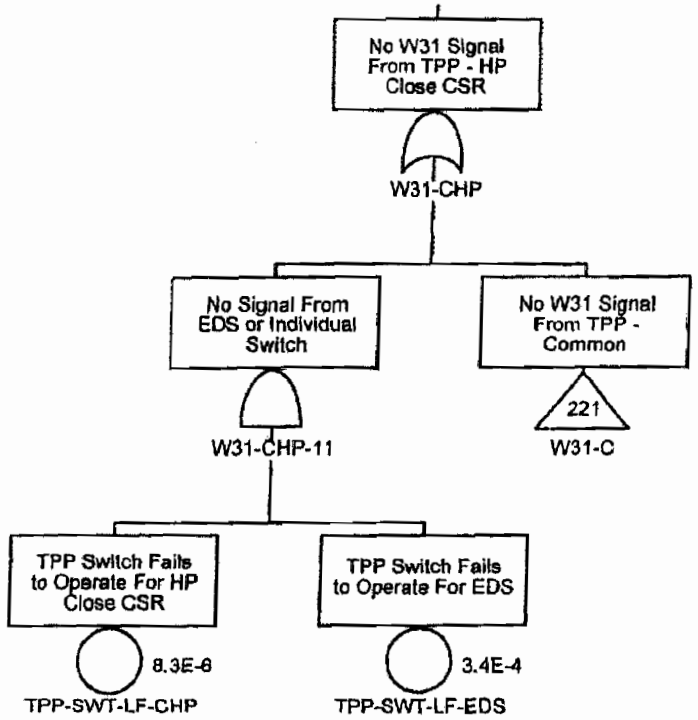

Confidential Treatment Requested by Transocean Holdings LLC

TRN-HCEC-00056670

No W31 Signal From TPP - Close LIC

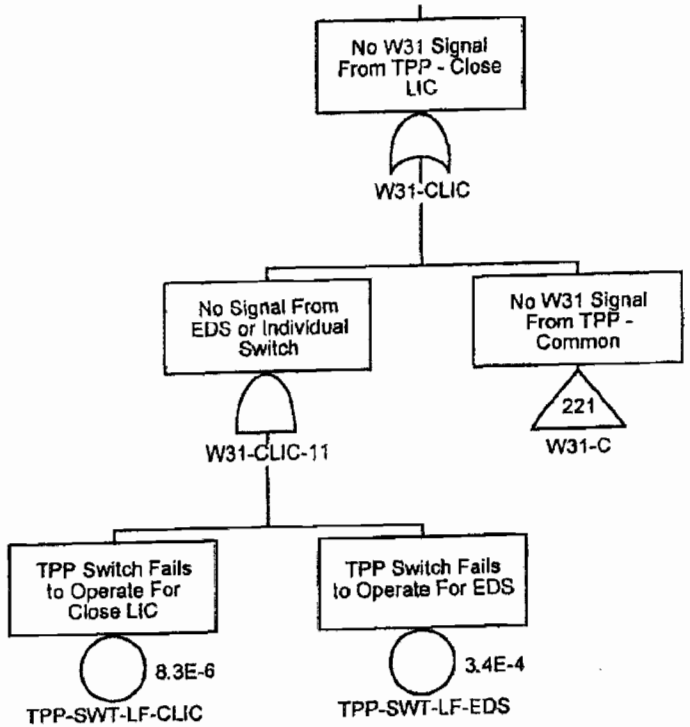

Confidential Treatment Requested by Transocean Holdings LLC

TRN-HCEC-00056671

No W31 Signal From TPP - Close LIK

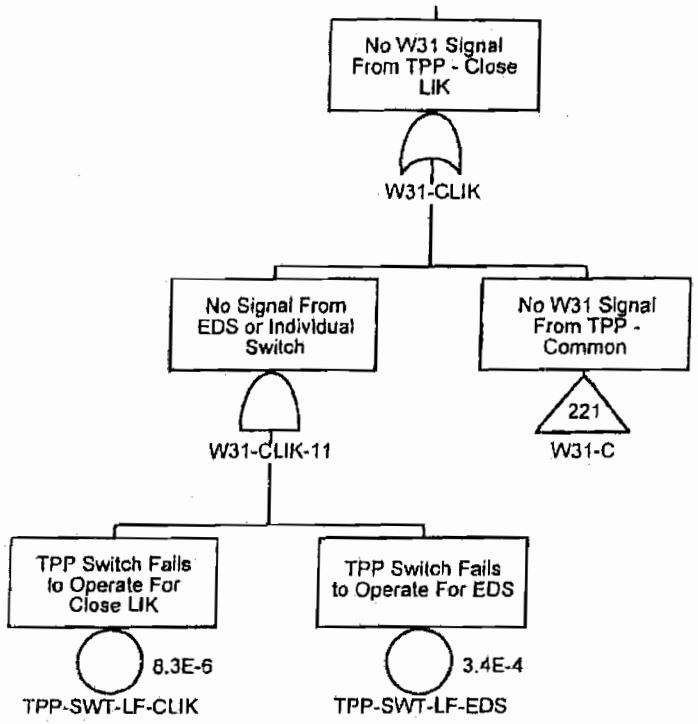

Confidential Treatment Requested by Transocean Holdings LLC

TRN-HCEC-00056672

No W31 Signal From TPP - Close LOC

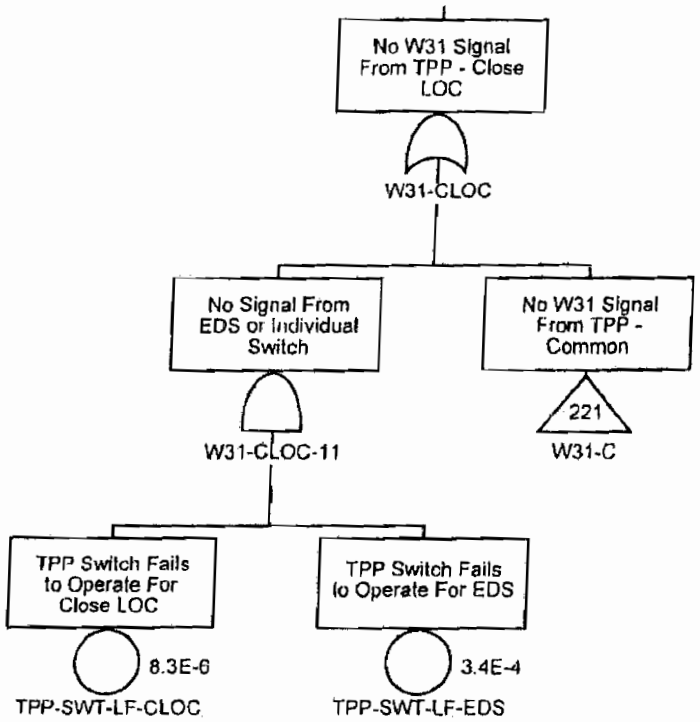

Confidential Treatment Requested by Transocean Holdings LLC

TRN-HCEC-00056673

No W31 Signal From TPP - Close LOK

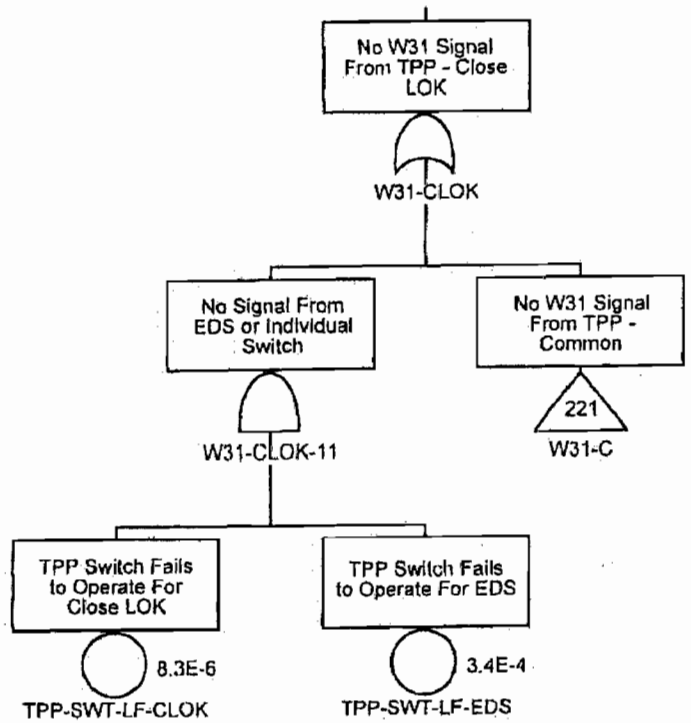

Confidential Treatment Requested by Transocean Holdings LLC

TRN-HCEC-00056674

No W31 Signal From TPP - Close CSR

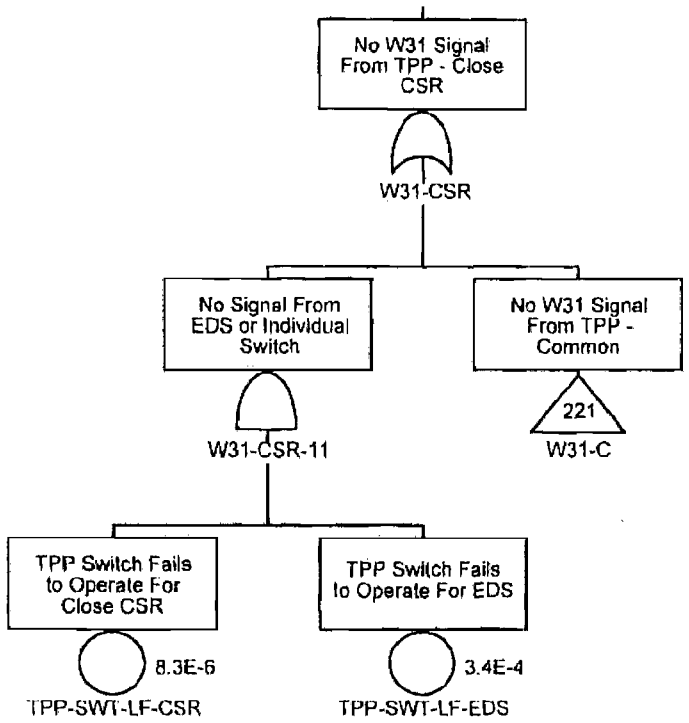

Confidential Treatment Requested by Transocean Holdings LLC

TRN-HCEC-00056675

No W31 Signal From TPP - Close UIC

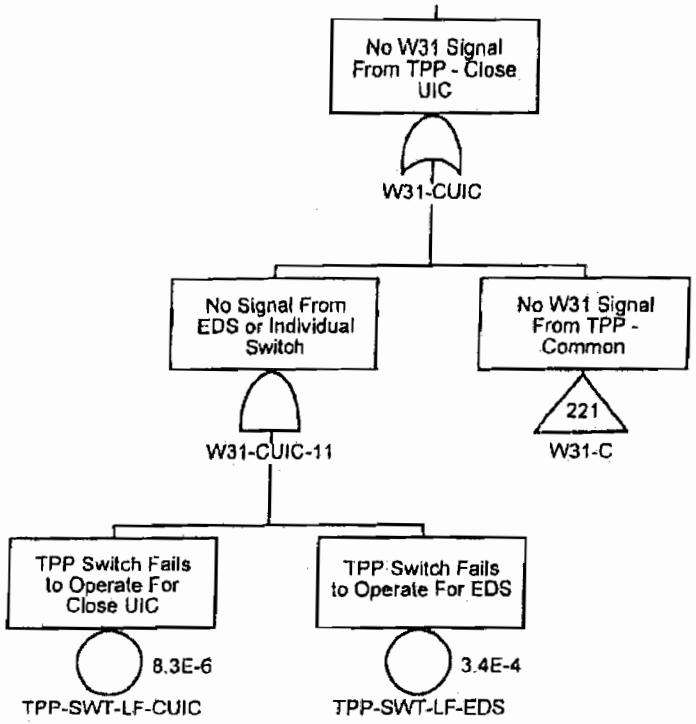

Confidential Treatment Requested by Transocean Holdings LLC

TRN-HCEC-00056676

No W31 Signal From TPP - Close UIK

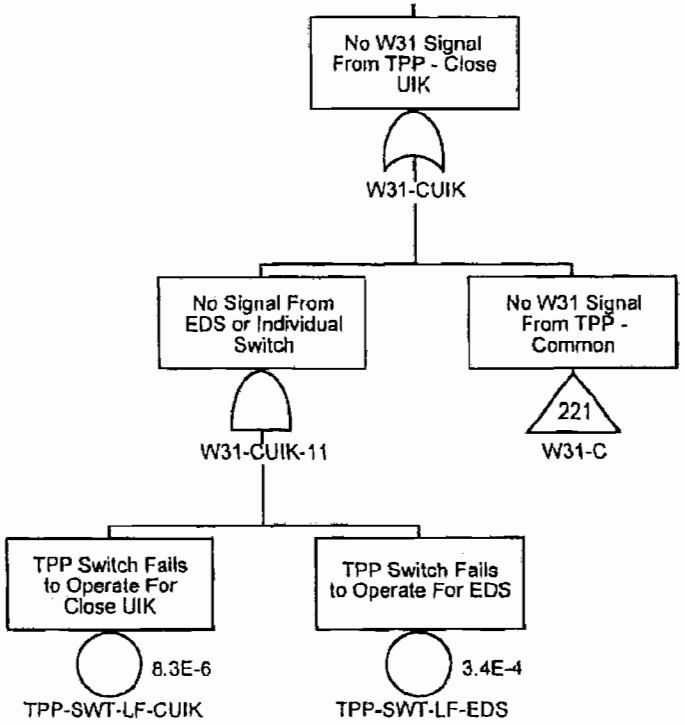

Confidential Treatment Requested by Transocean Holdings LLC

TRN-HCEC-00056677

No W31 Signal From TPP - Close UOC

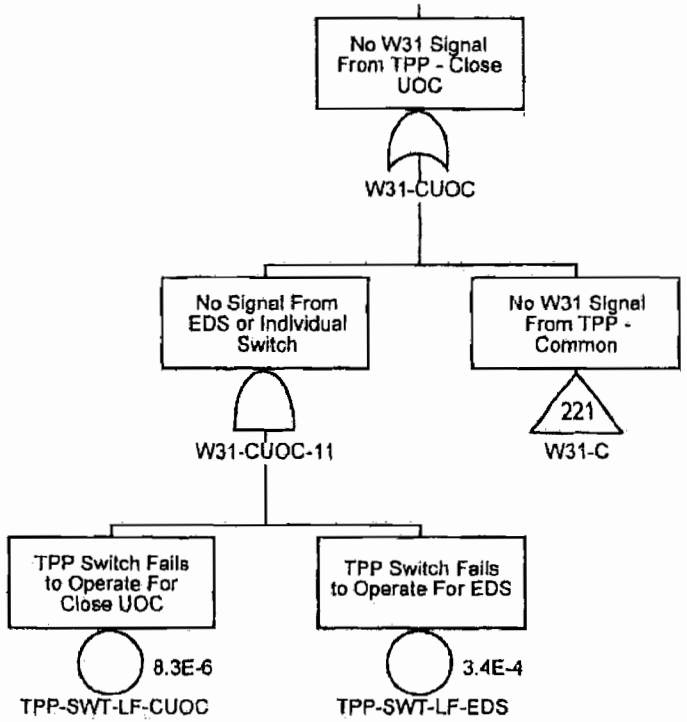

Confidential Treatment Requested by Transocean Holdings LLC

TRN-HCEC-00056678

No W31 Signal From TPP - Close UOK

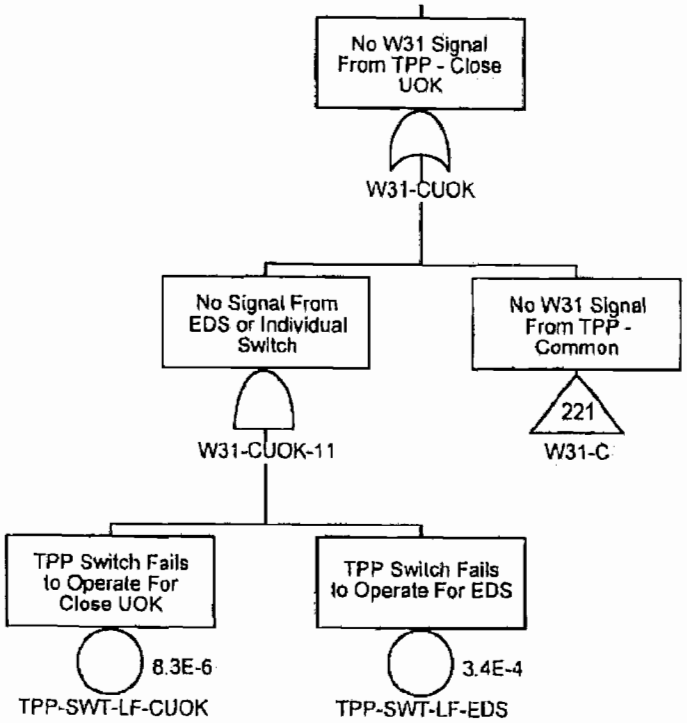

Confidential Treatment Requested by Transocean Holdings LLC

TRN-HCEC-00056679

No W31 Signal From TPP - Close LA

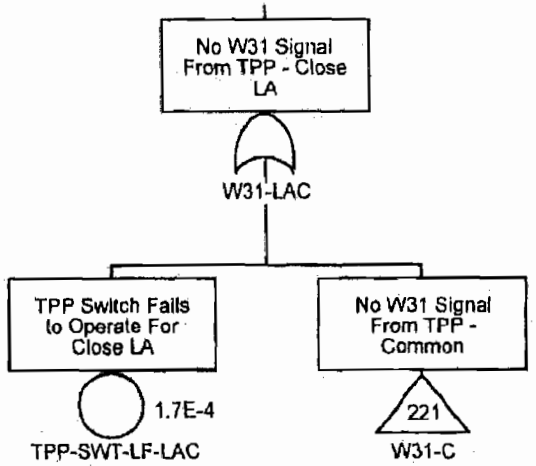

Confidential Treatment Requested by Transocean Holdings LLC

TRN-HCEC-00056680

No W31 Signal From TPP - Close LPR

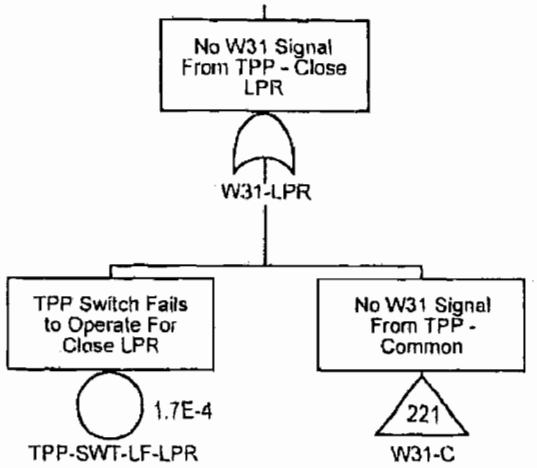

Confidential Treatment Requested by Transocean Holdings LLC

TRN-HCEC-00056681

No W31 Signal From TPP - Close MPR

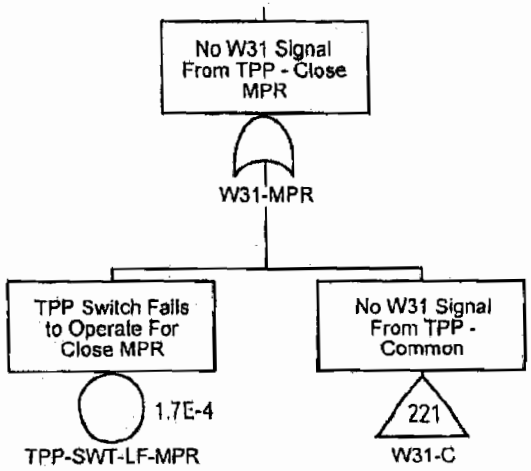

Confidential Treatment Requested by Transocean Holdings LLC

TRN-HCEC-00056682

No W31 Signal From TPP - Open LIC

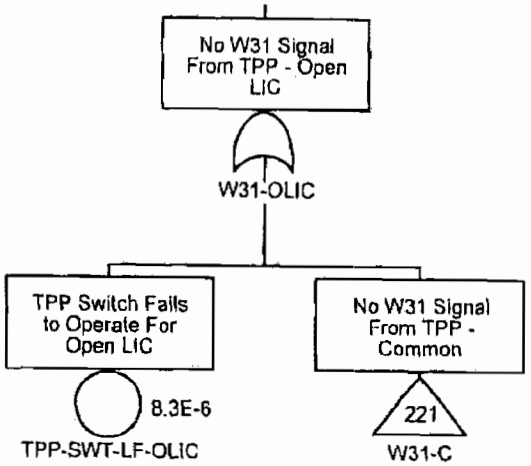

Confidential Treatment Requested by Transocean Holdings LLC

TRN-HCEC-00056683

No W31 Signal From TPP - Open LIK

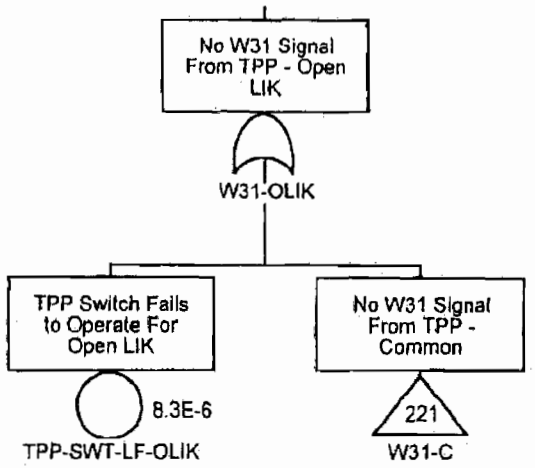

Confidential Treatment Requested by Transocean Holdings LLC

TRN-HCEC-00056684

No W31 Signal From TPP - Open LOC

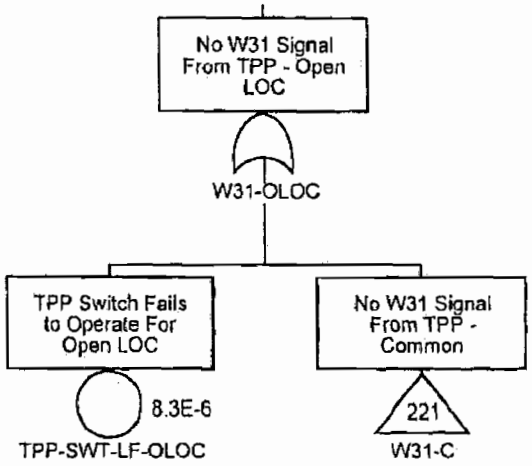

Confidential Treatment Requested by Transocean Holdings LLC

TRN-HCEC-00056685

No W31 Signal From TPP - Open LOK

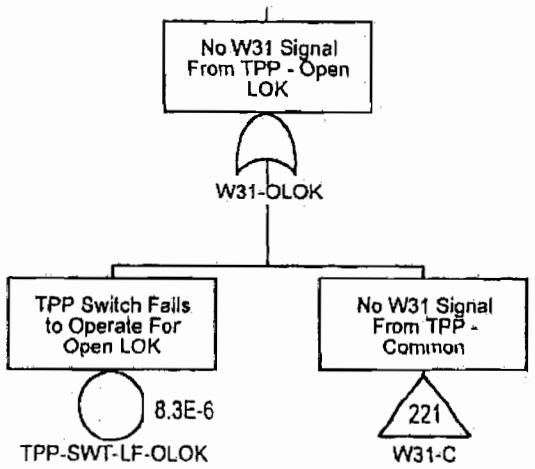

Confidential Treatment Requested by Transocean Holdings LLC

TRN-HCEC-00056686

No W31 Signal From TPP - Open UIC

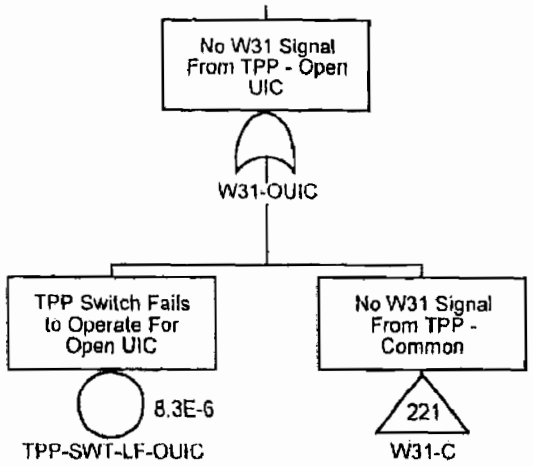

Confidential Treatment Requested by Transocean Holdings LLC

TRN-HCEC-00056687

No W31 Signal From TPP - Open UIK

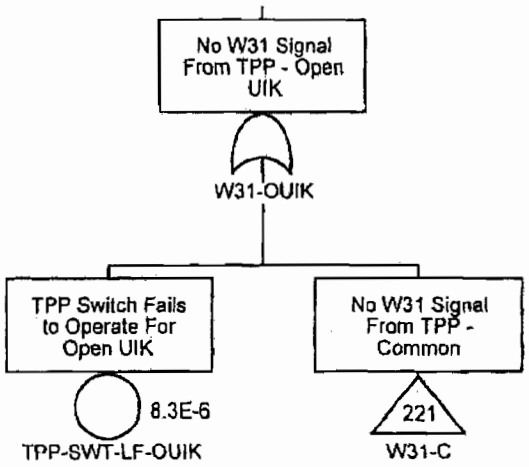

Confidential Treatment Requested by Transocean Holdings LLC

TRN-HCEC-00056688

No W31 Signal From TPP - Open UOC

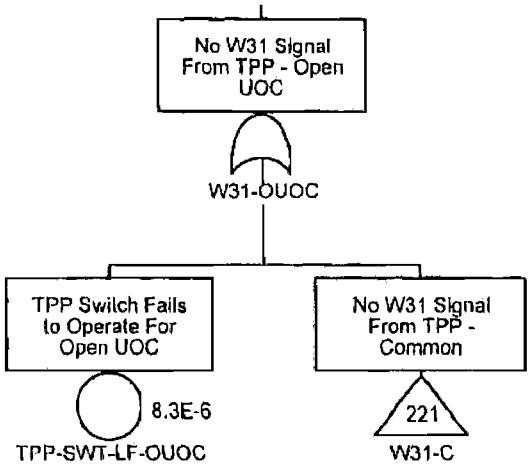

Confidential Treatment Requested by Transocean Holdings LLC

TRN-HCEC-00056689

No W31 Signal From TPP - Open UOK

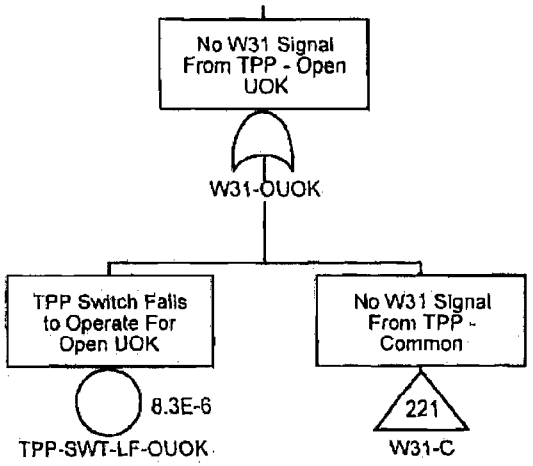

Confidential Treatment Requested by Transocean Holdings LLC

TRN-HCEC-00056690

No W31 Signal From TPP - LMRP Pri. Dis.

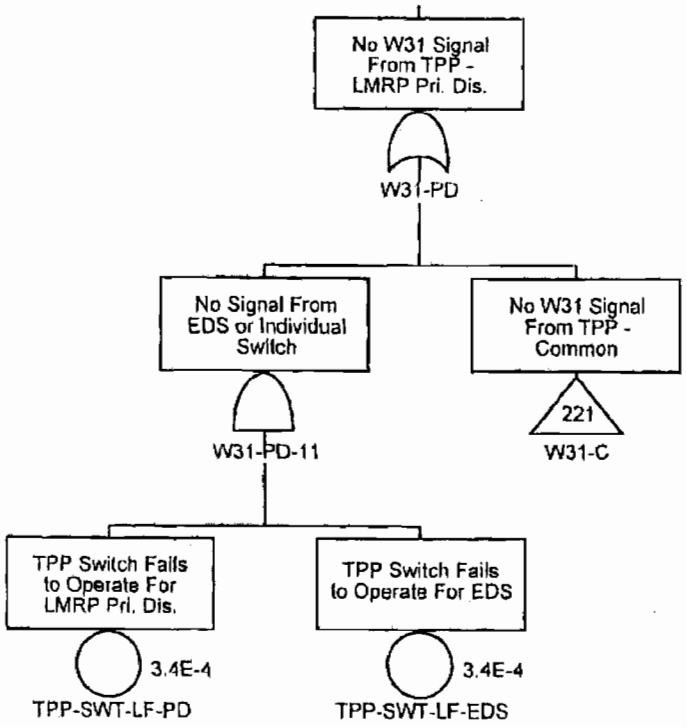

Confidential Treatment Requested by Transocean Holdings LLC

TRN-HCEC-00056691

No W31 Signal From TPP - Pod Select

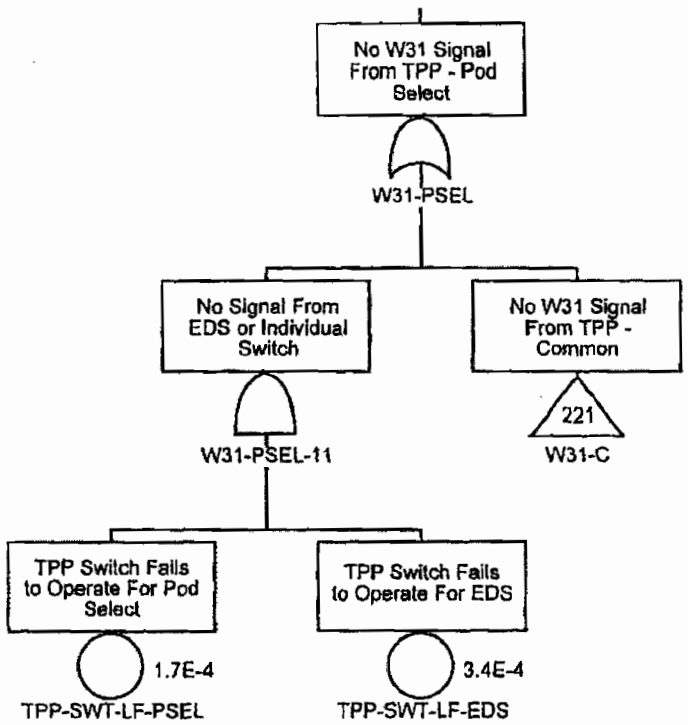

Confidential Treatment Requested by Transocean Holdings LLC

TRN-HCEC-00056692

No W31 Signal From TPP - LMRP Sec. Dis.

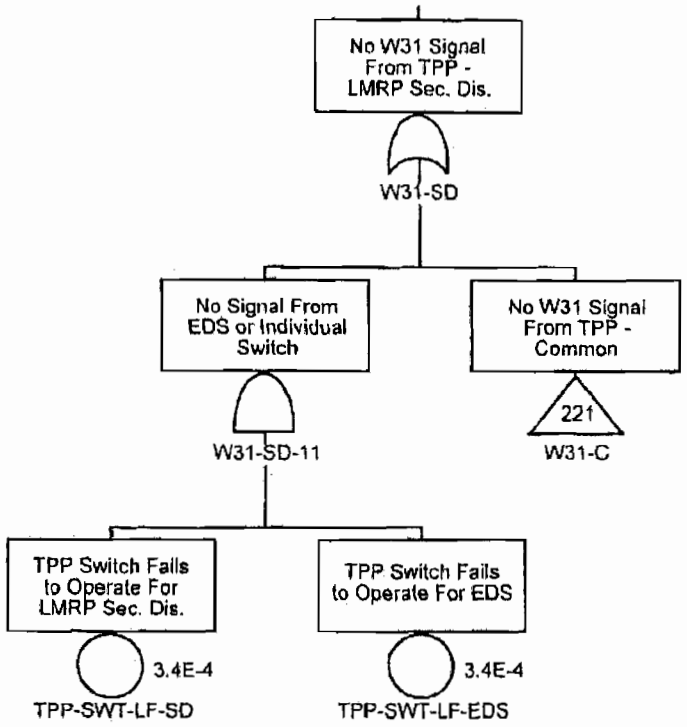

Confidential Treatment Requested by Transocean Holdings LLC

TRN-HCEC-00056693

No W31 Signal From TPP - Close UA

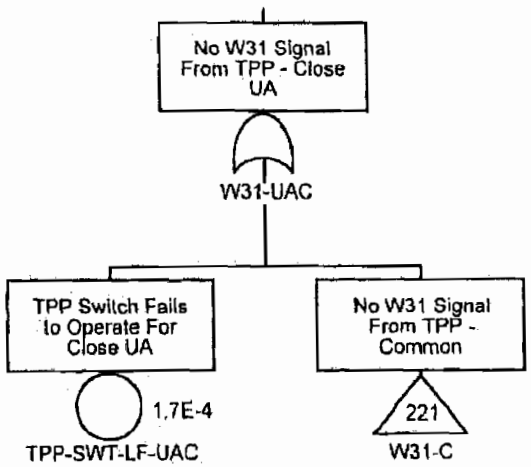

Confidential Treatment Requested by Transocean Holdings LLC

TRN-HCEC-00056694

No W31 Signal From TPP - HP Close USR

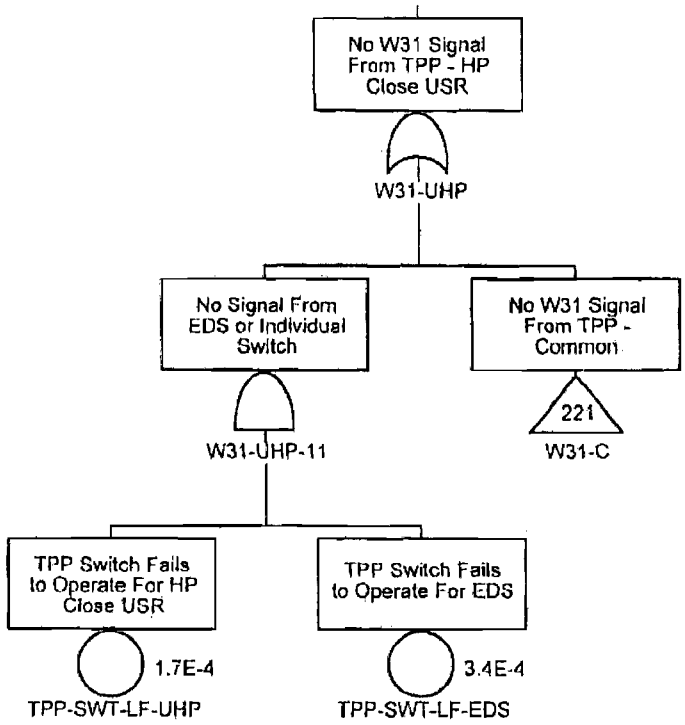

Confidential Treatment Requested by Transocean Holdings LLC

TRN-HCEC-00056695

No W31 Signal From TPP - Close UPR

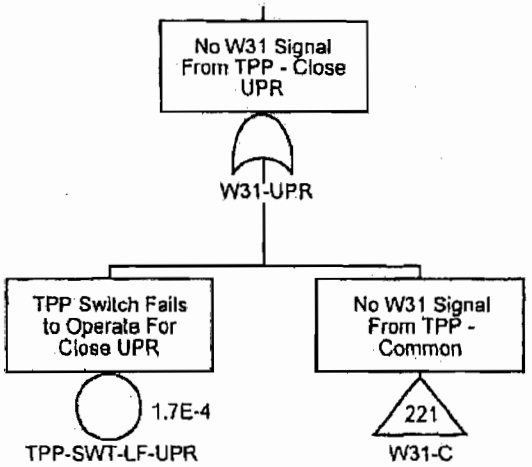

Confidential Treatment Requested by Transocean Holdings LLC

TRN-HCEC-00056696

No W31 Signal From TPP - Close USR

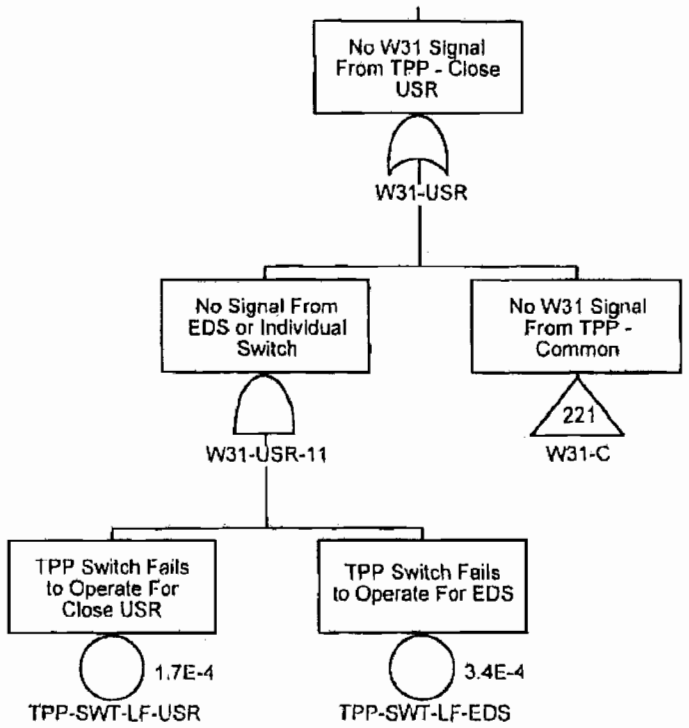

Confidential Treatment Requested by Transocean Holdings LLC

TRN-HCEC-00056697

No W31 Signal From Driller's Panel - Open Yellow Conduit Supp

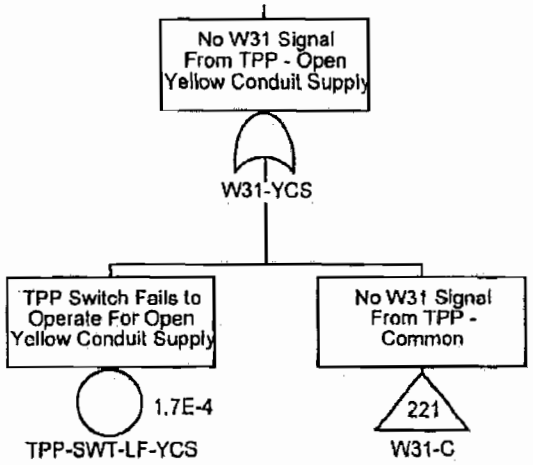

Confidential Treatment Requested by Transocean Holdings LLC

TRN-HCEC-00056698

No W31 Signal From Toolpusher's Panel - Open Yellow HL Supply

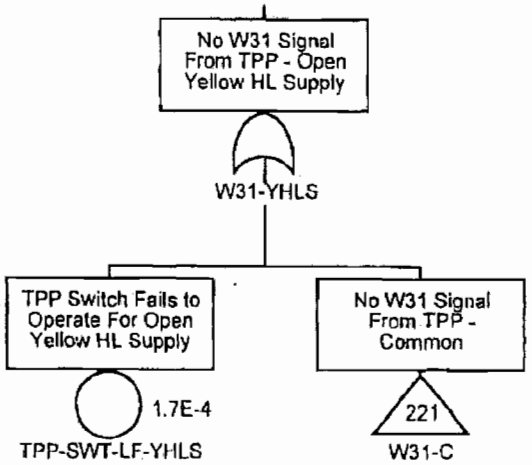

Confidential Treatment Requested by Transocean Holdings LLC

TRN-HCEC-00056699

No W39 Signal From CCU Workstation

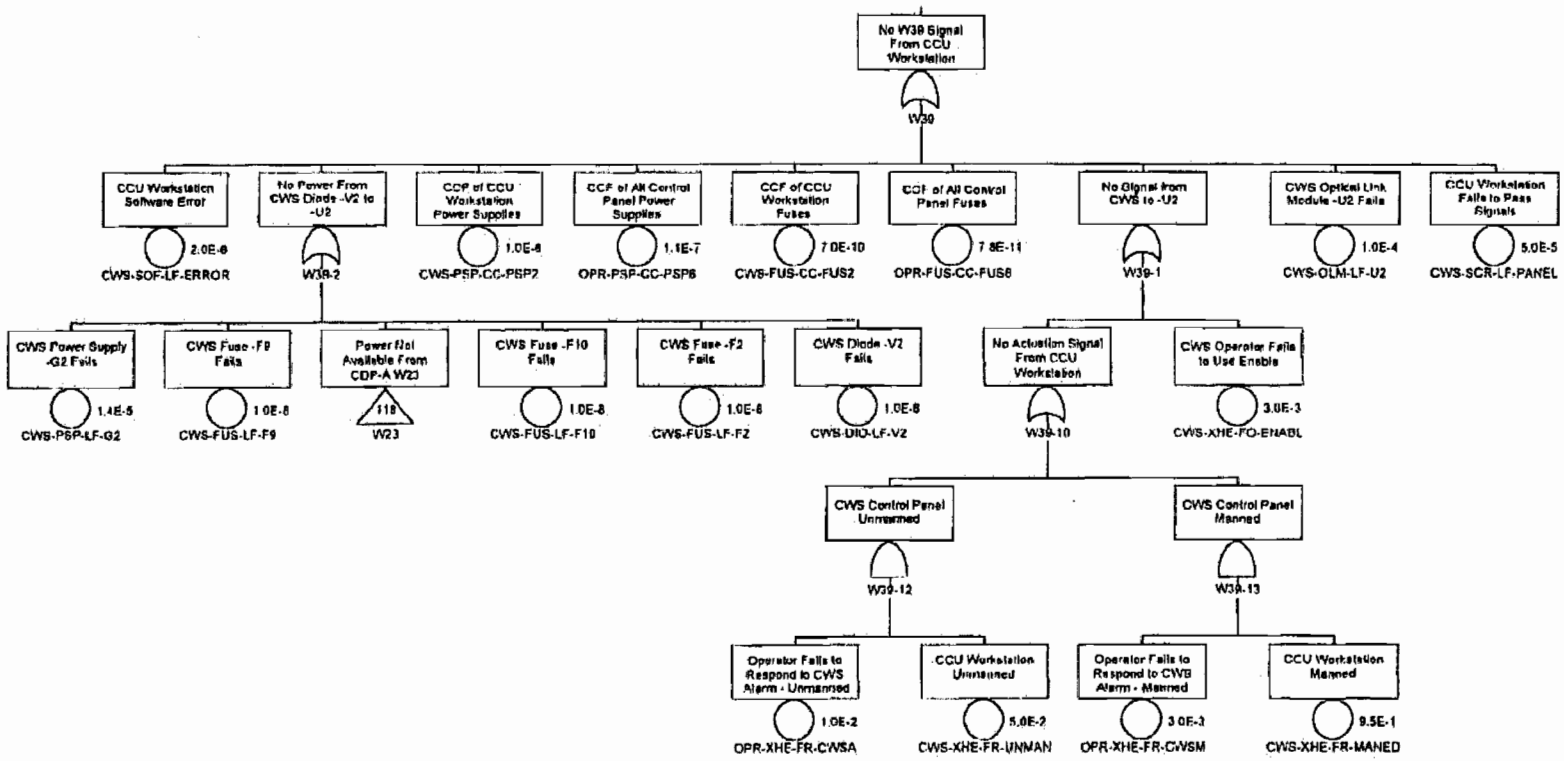

Confidential Treatment Requested by Transocean Holdings LLC

TRN-HCEC-00056700

Power Not Available From CDP-B W4

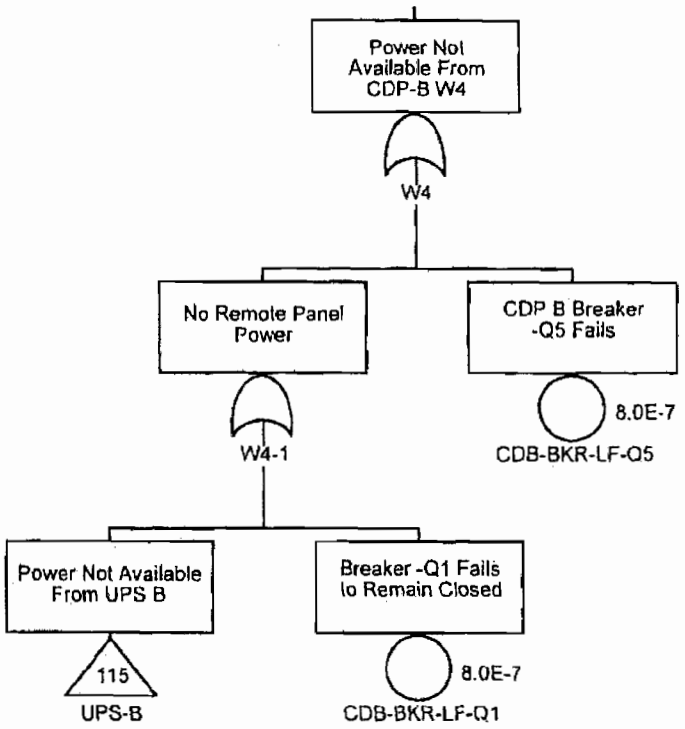

Confidential Treatment Requested by Transocean Holdings LLC

TRN-HCEC-00056701

Power Not Available From CDP-A W5

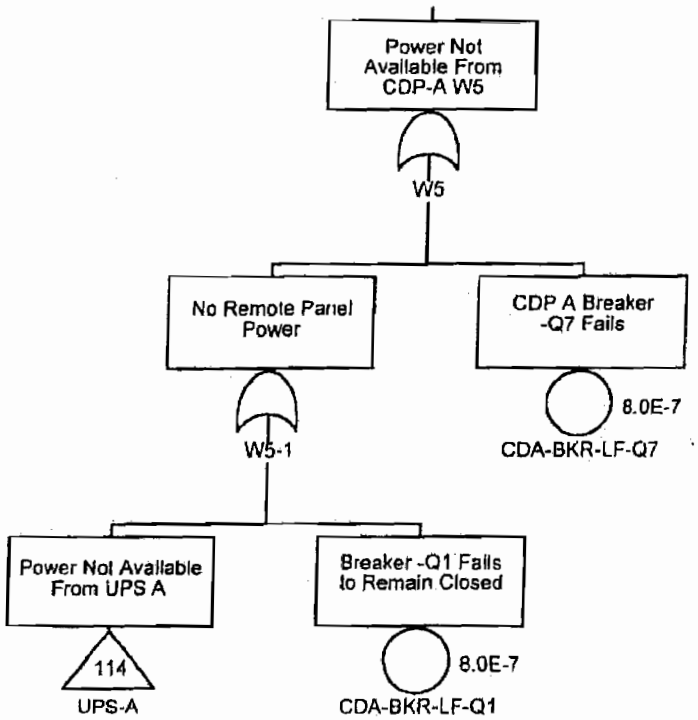

Confidential Treatment Requested by Transocean Holdings LLC

TRN-HCEC-00056702

Common W51 Signal Faults

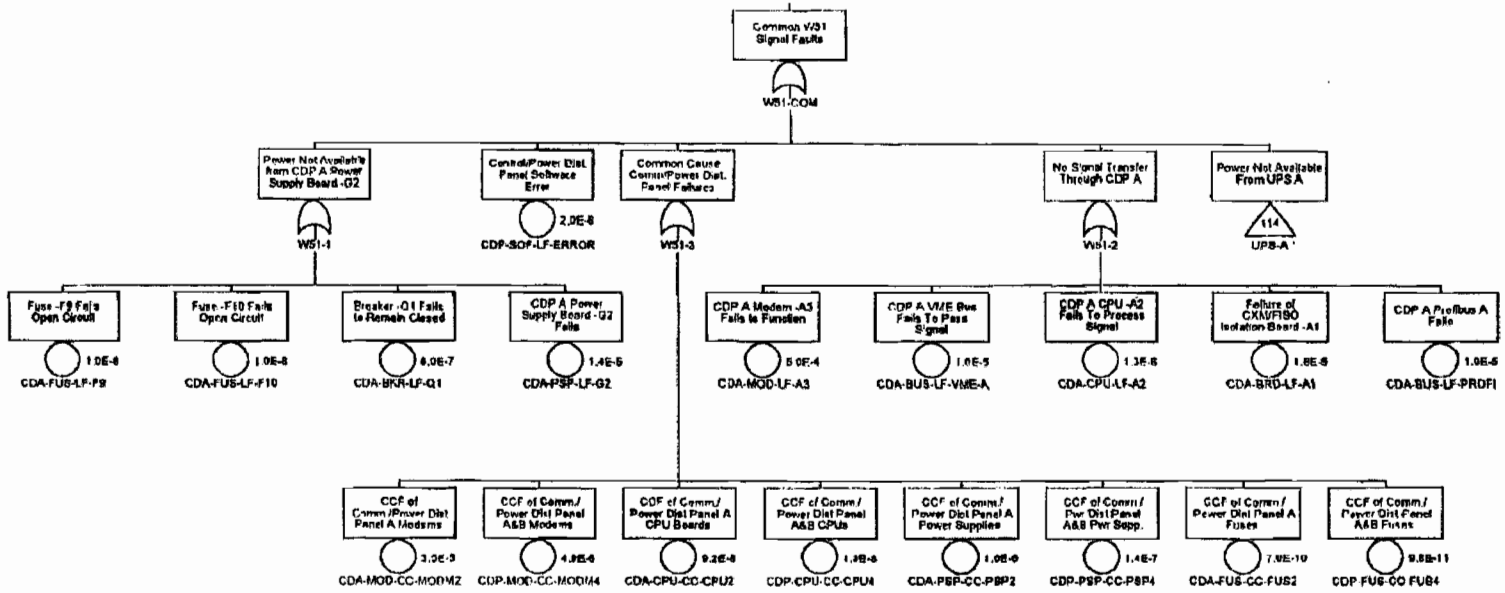

Confidential Treatment Requested by Transocean Holdings LLC

TRN-HCEC-00056703

Common W52 Signal Faults

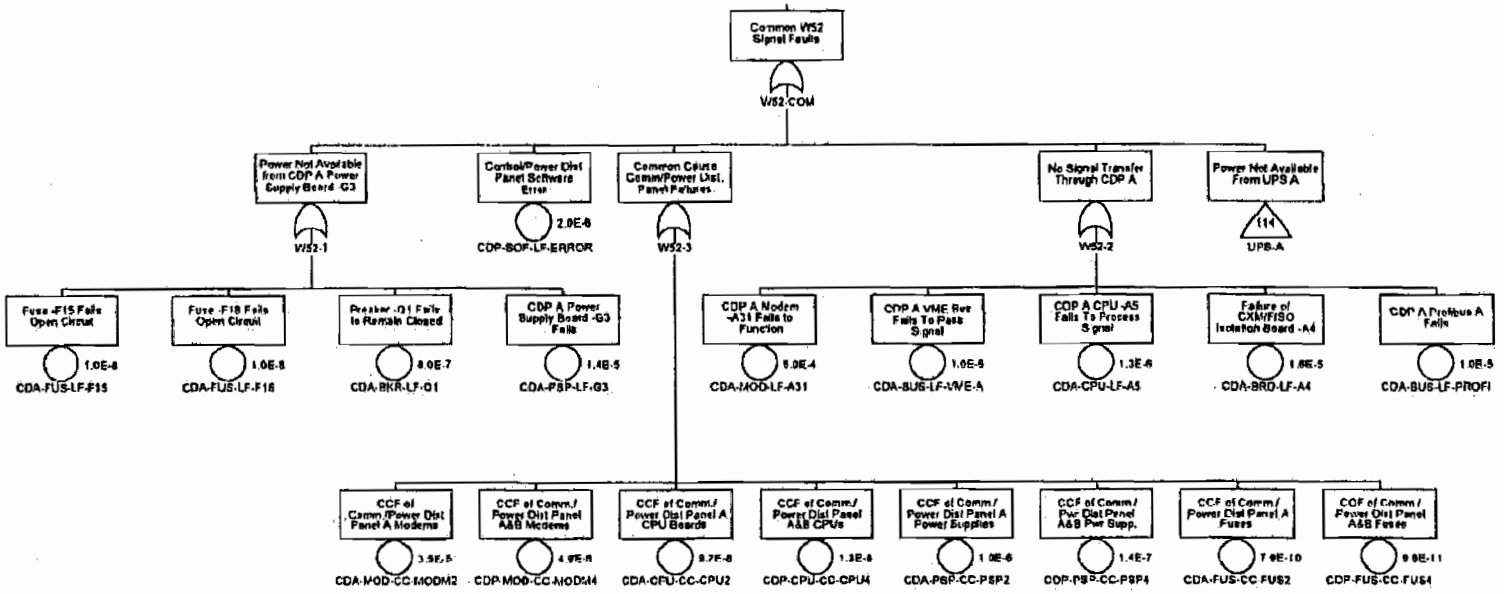

Confidential Treatment Requested by Transocean Holdings LLC

TRN-HCEC-00056704

Common W53 Signal Faults

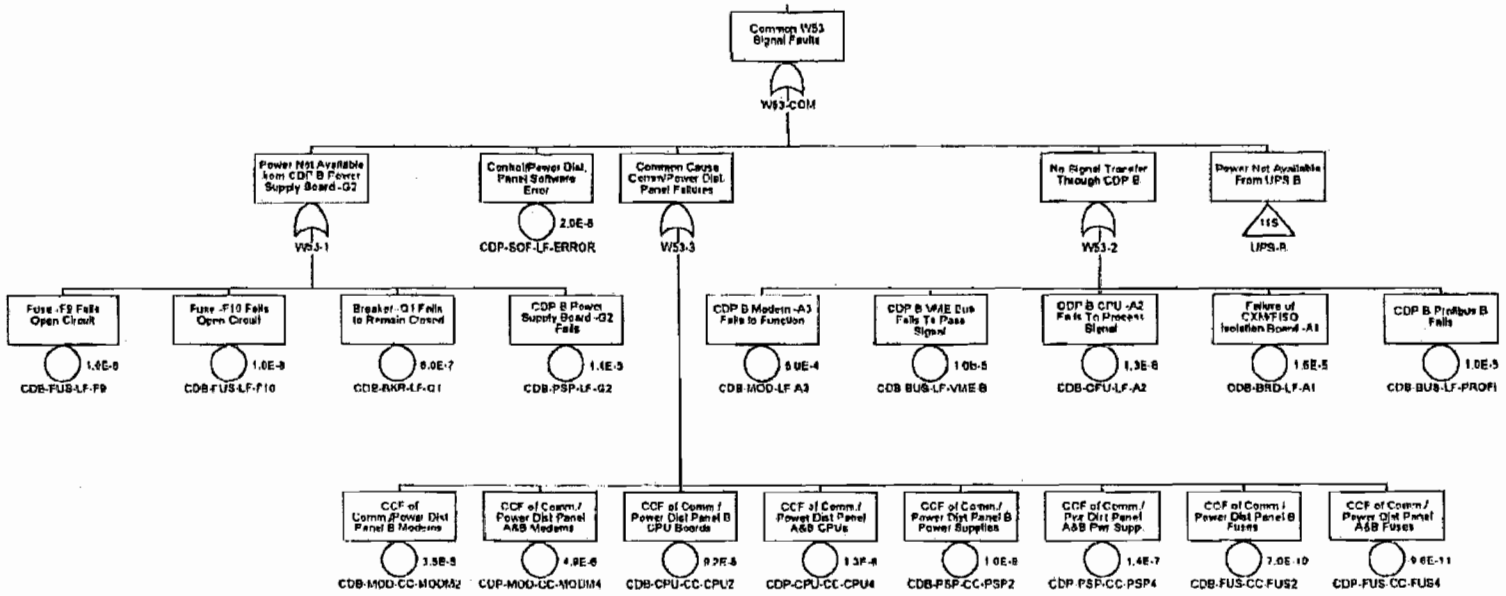

Confidential Treatment Requested by Transocean Holdings LLC

TRN-HCEC-00056705

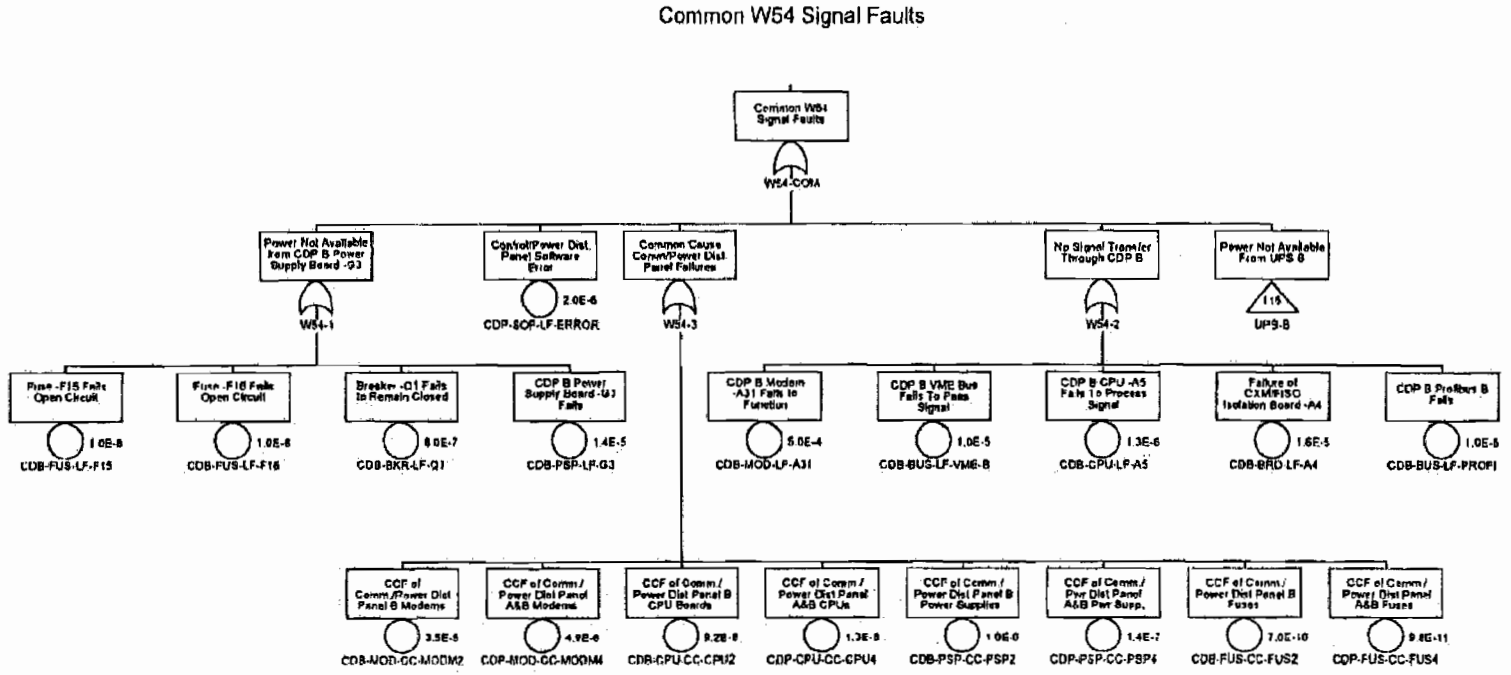

Confidential Treatment Requested by Transocean Holdings LLC

TRN-HCEC-00056706

Power Not Available From CDP-B W6

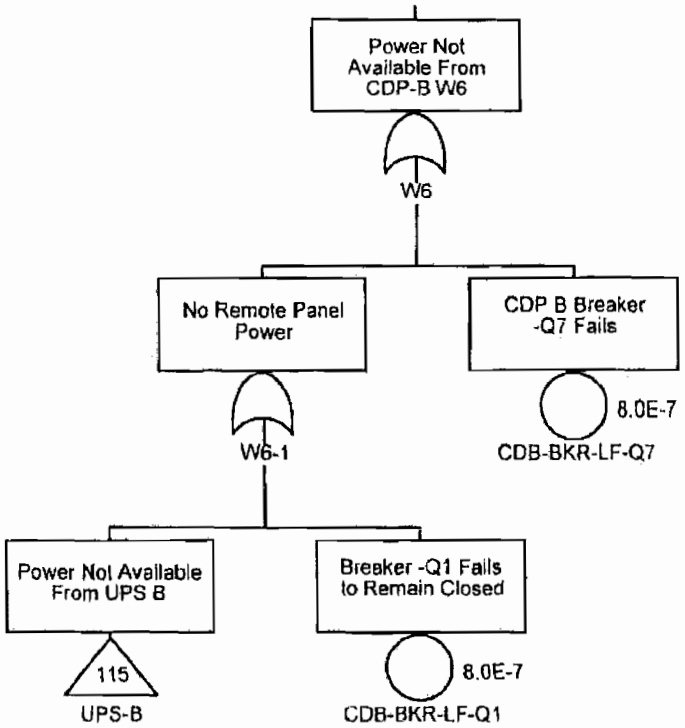

Confidential Treatment Requested by Transocean Holdings LLC

TRN-HCEC-00056707

No Blue Power Supply -W60

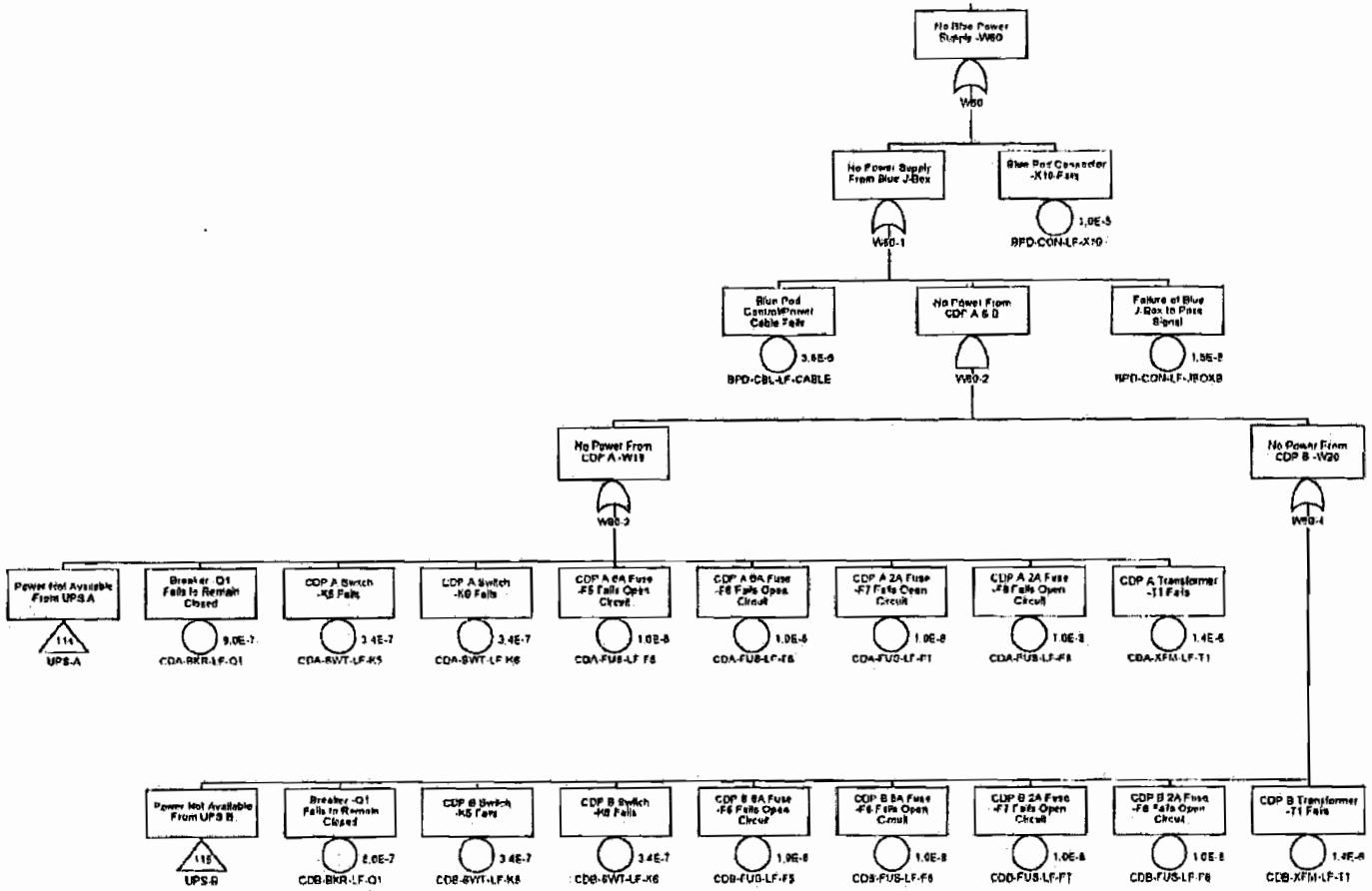

Confidential Treatment Requested by Transocean Holdings LLC

TRN-HCEC-00056708

No Yellow Power Supply -W61

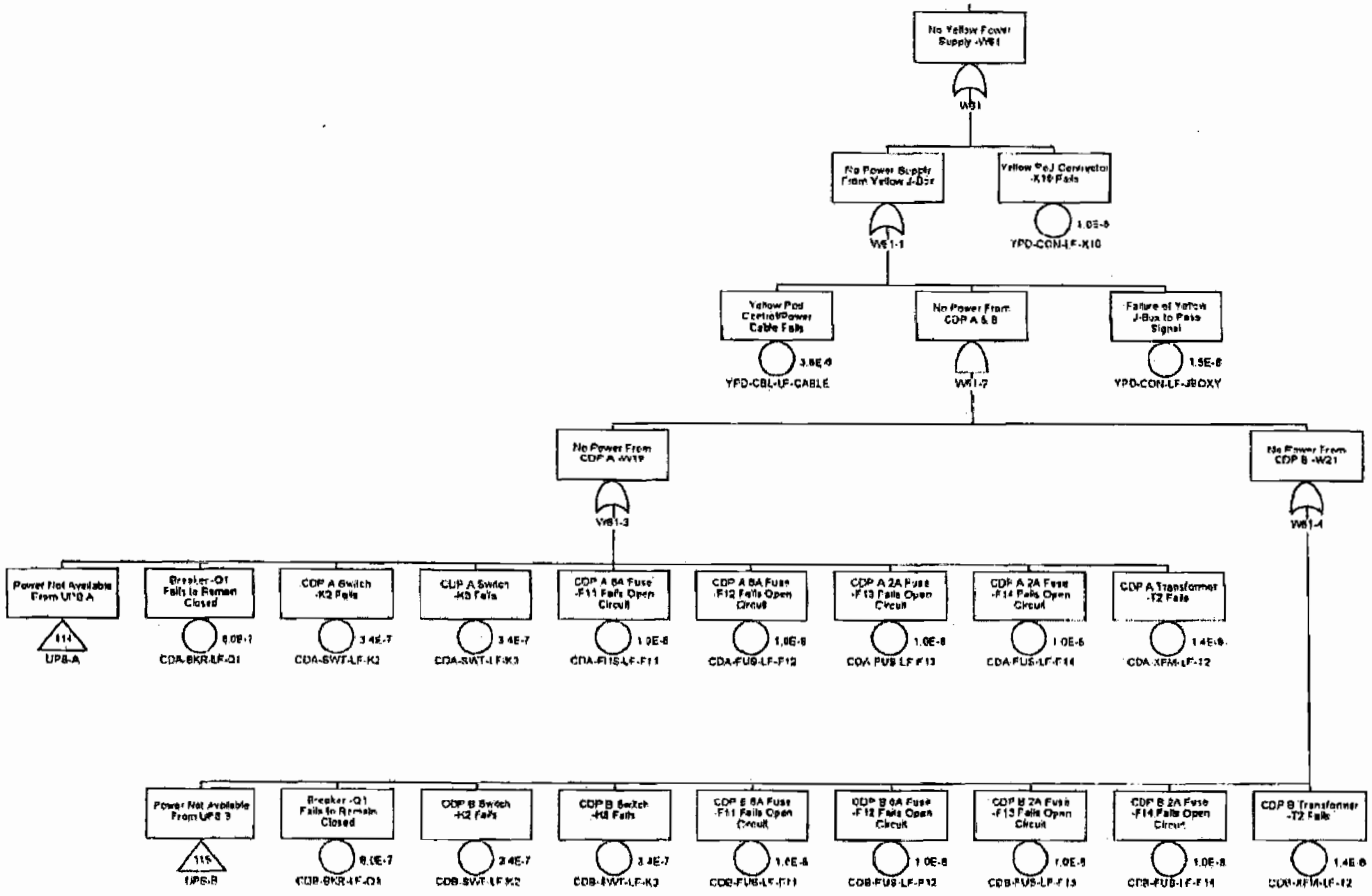

Confidential Treatment Requested by Transocean Holdings LLC

TRN-HCEC-00056709

No W62 Signal Open Blue Conduit Supply to Blue Pod

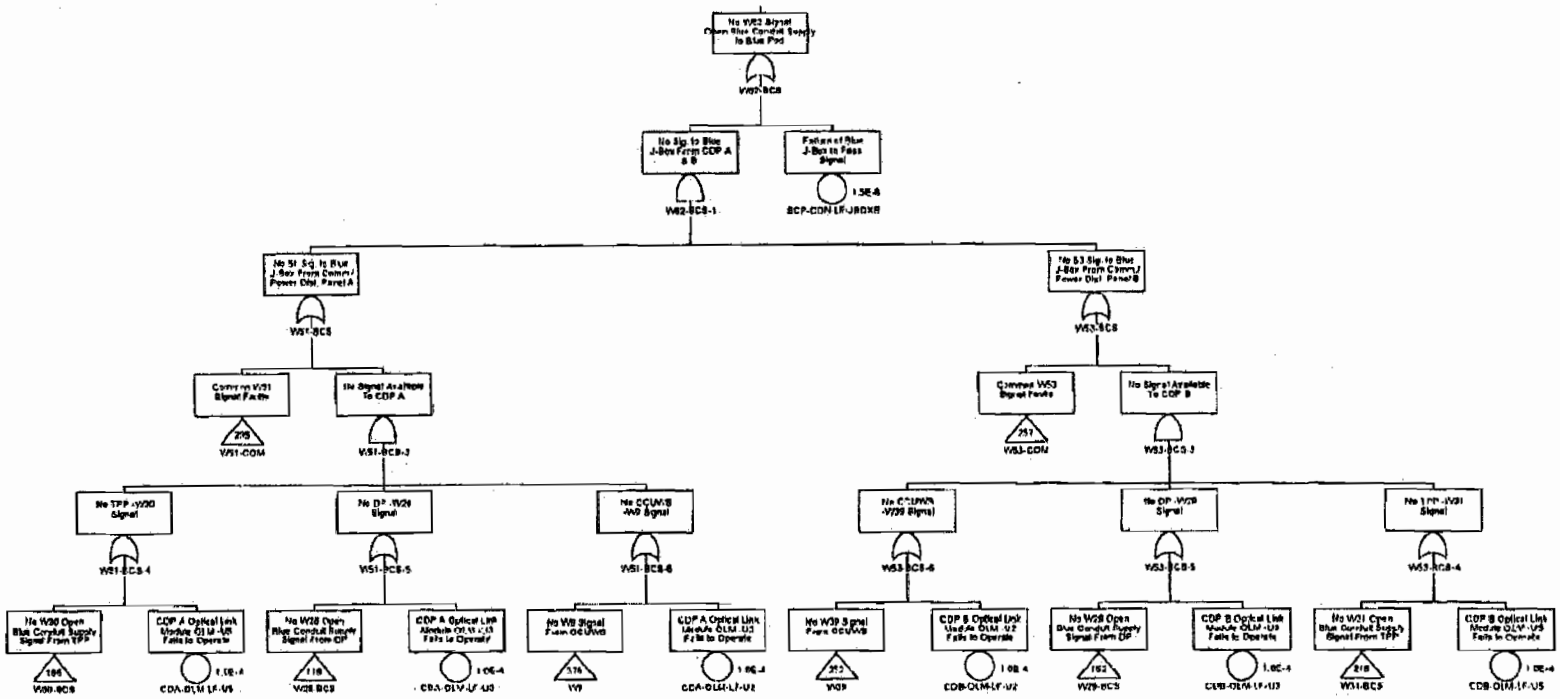

Confidential Treatment Requested by Transocean Holdings LLC

TRN-HCEC-00056710

No W62 Signal Open Blue HL Supply to Blue Pod

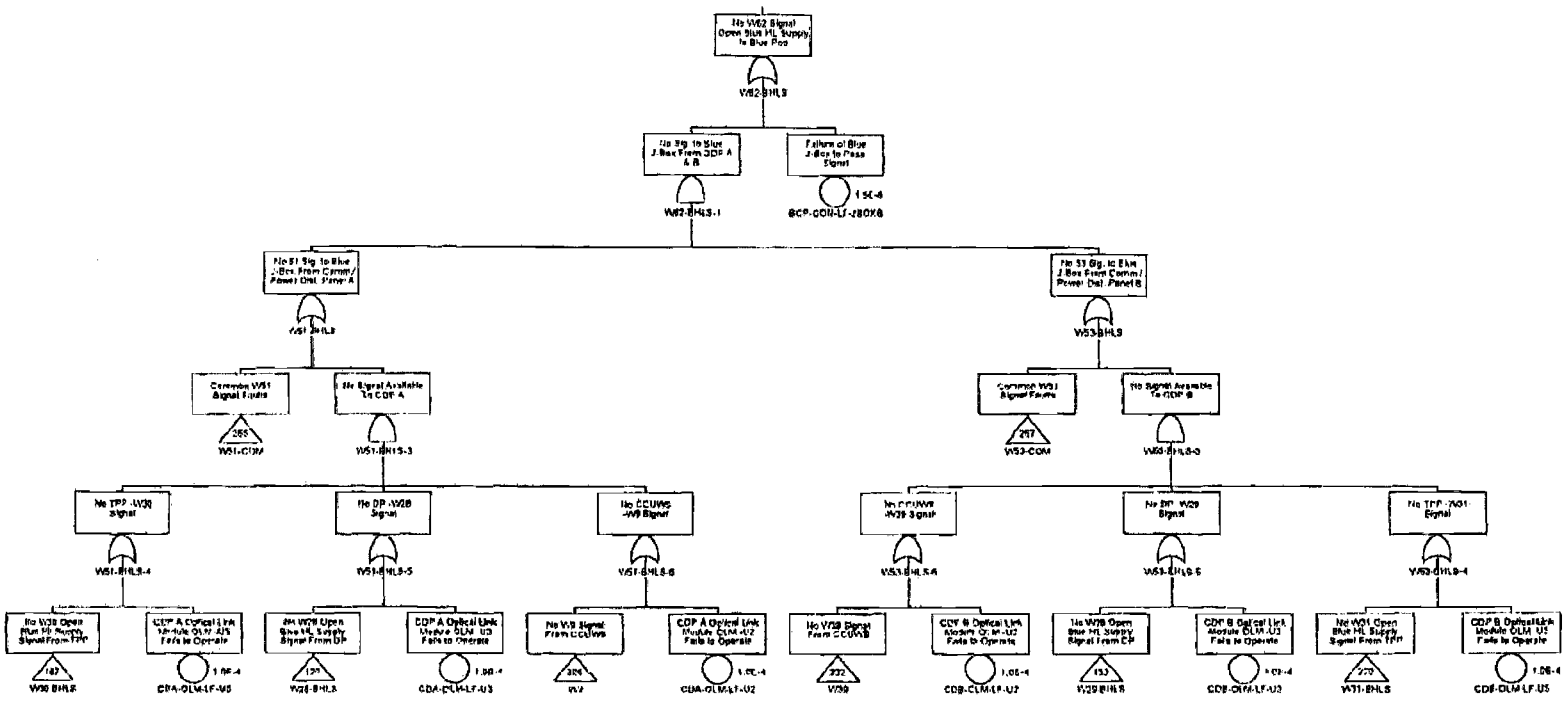

Confidential Treatment Requested by Transocean Holdings LLC

TRN-HCEC-00056711

No W62 Signal Close HP Casing Shear to Blue Pod

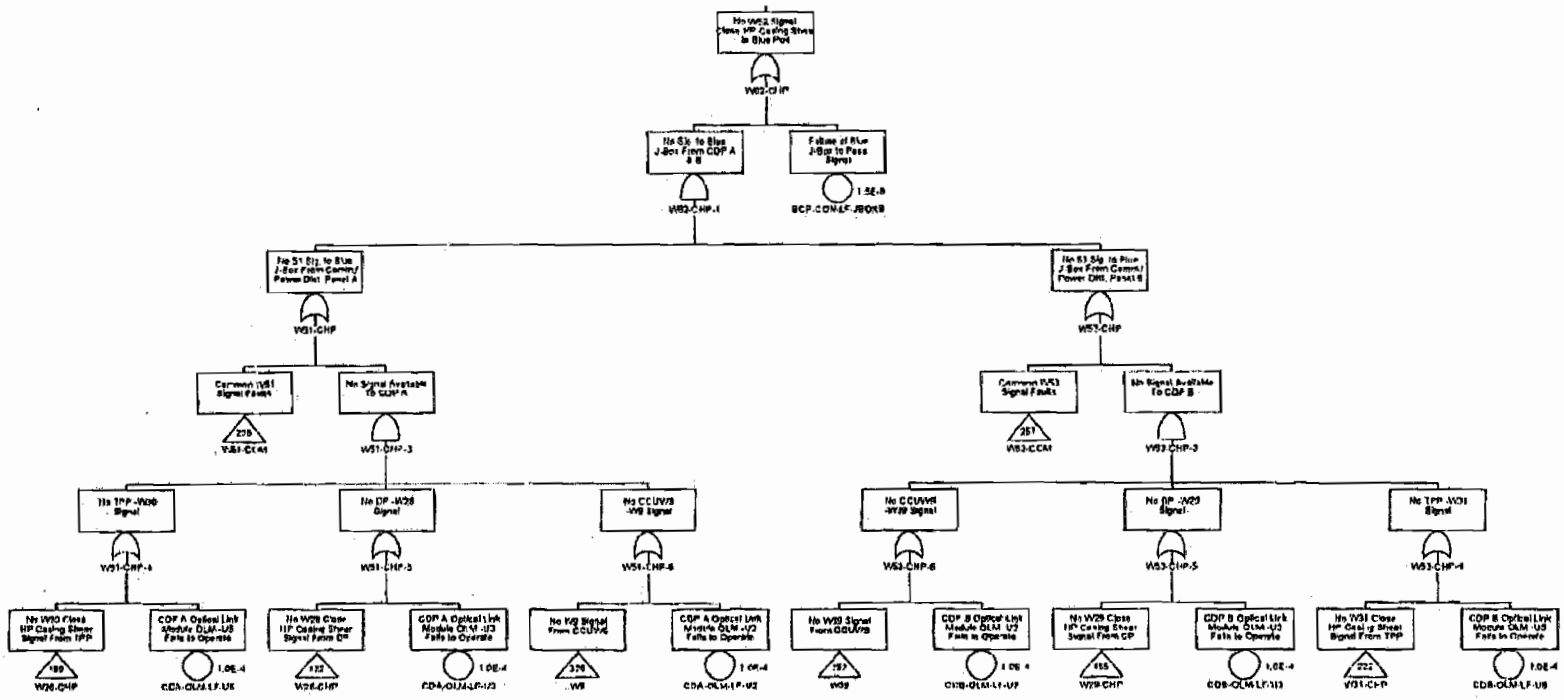

Confidential Treatment Requested by Transocean Holdings LLC

TRN-HCEC-00056712

No W62 Signal Close Lower Inner Choke Valve to Blue Pod

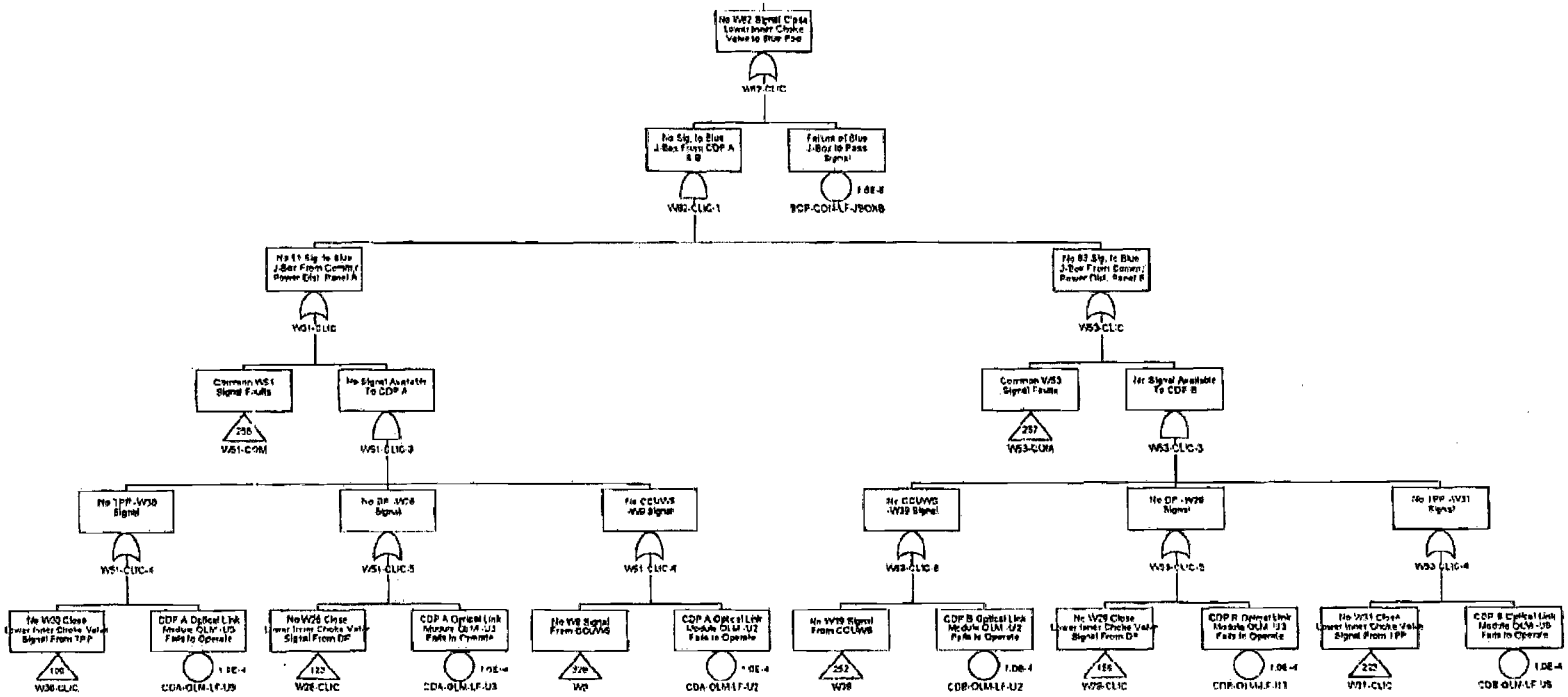

Confidential Treatment Requested by Transocean Holdings LLC

TRN-HCEC-00056713

No W62 Signal Close Lower Inner Kill Valve to Blue Pod

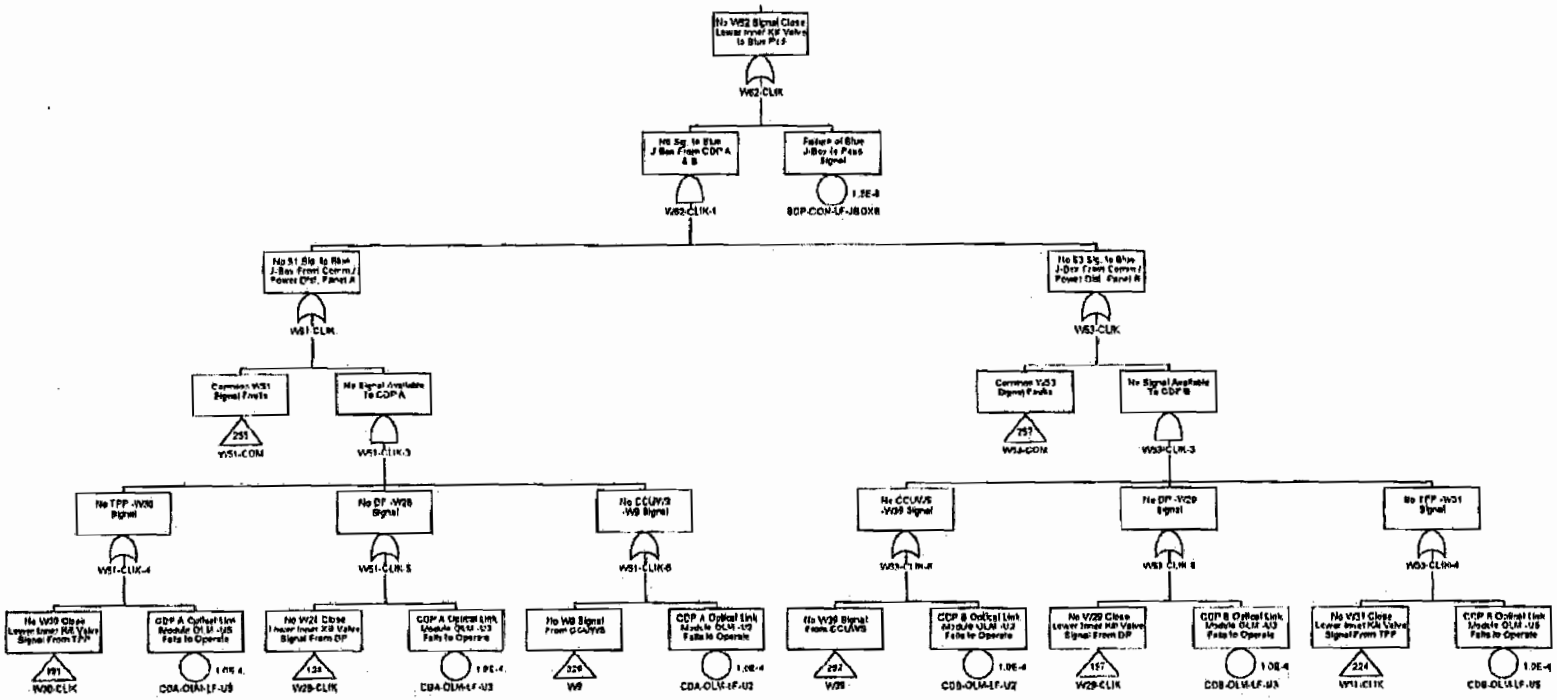

Confidential Treatment Requested by Transocean Holdings LLC

TRN-HCEC-00056714

No W62 Signal Close Lower Outer Choke Valve to Blue Pod

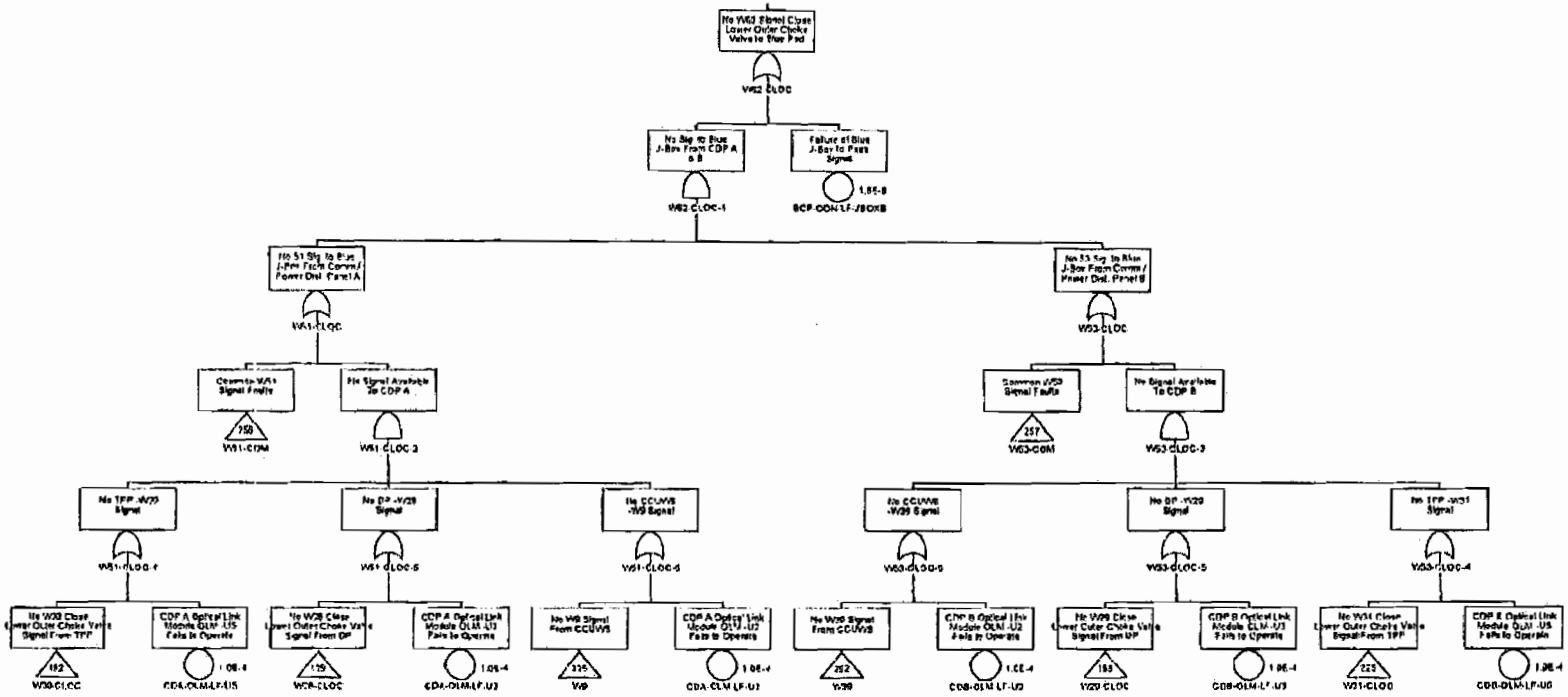

Confidential Treatment Requested by Transocean Holdings LLC

TRN-HCEC-00056715

No W62 Signal Close Lower Outer Kill Valve to Blue Pod

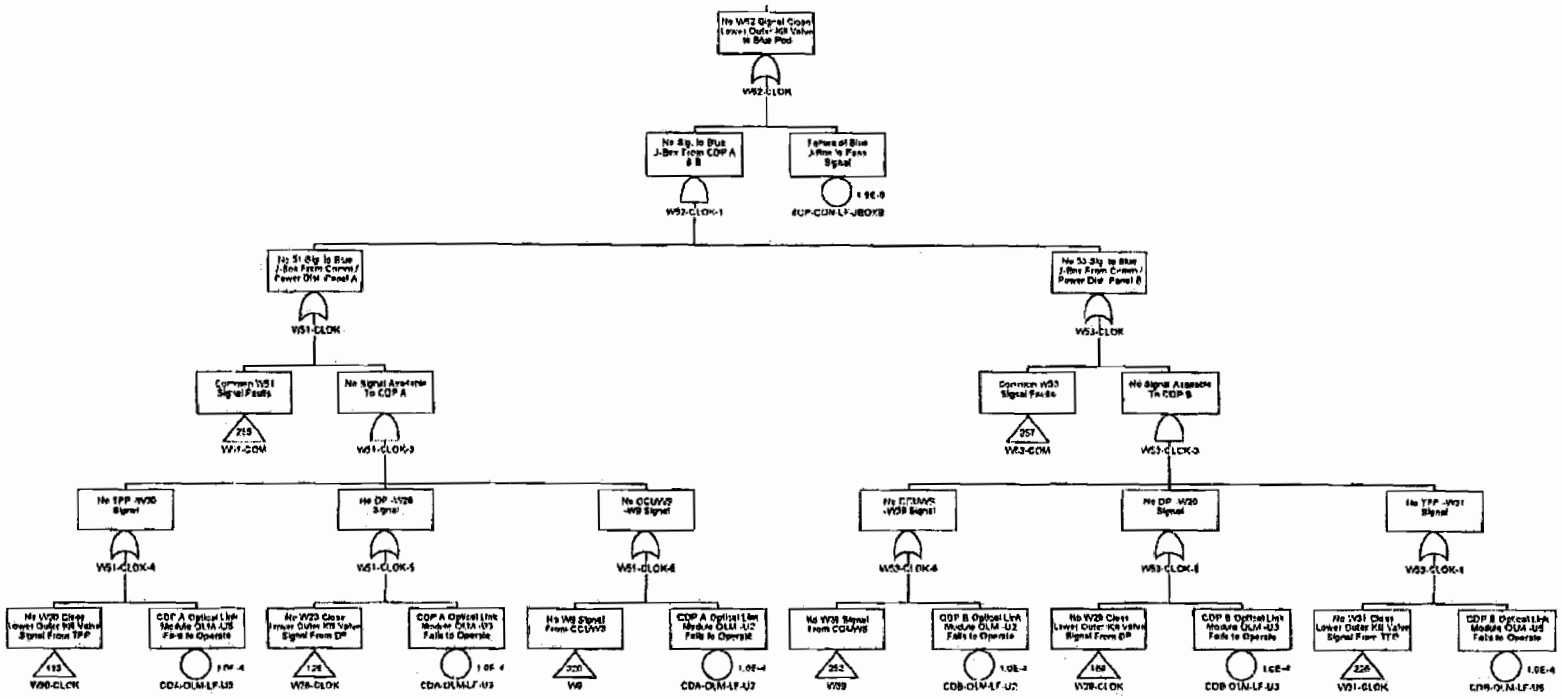

Confidential Treatment Requested by Transocean Holdings LLC

TRN-HCEC-00056716

No W62 Signal Close Casing Shear Ram to Blue Pod

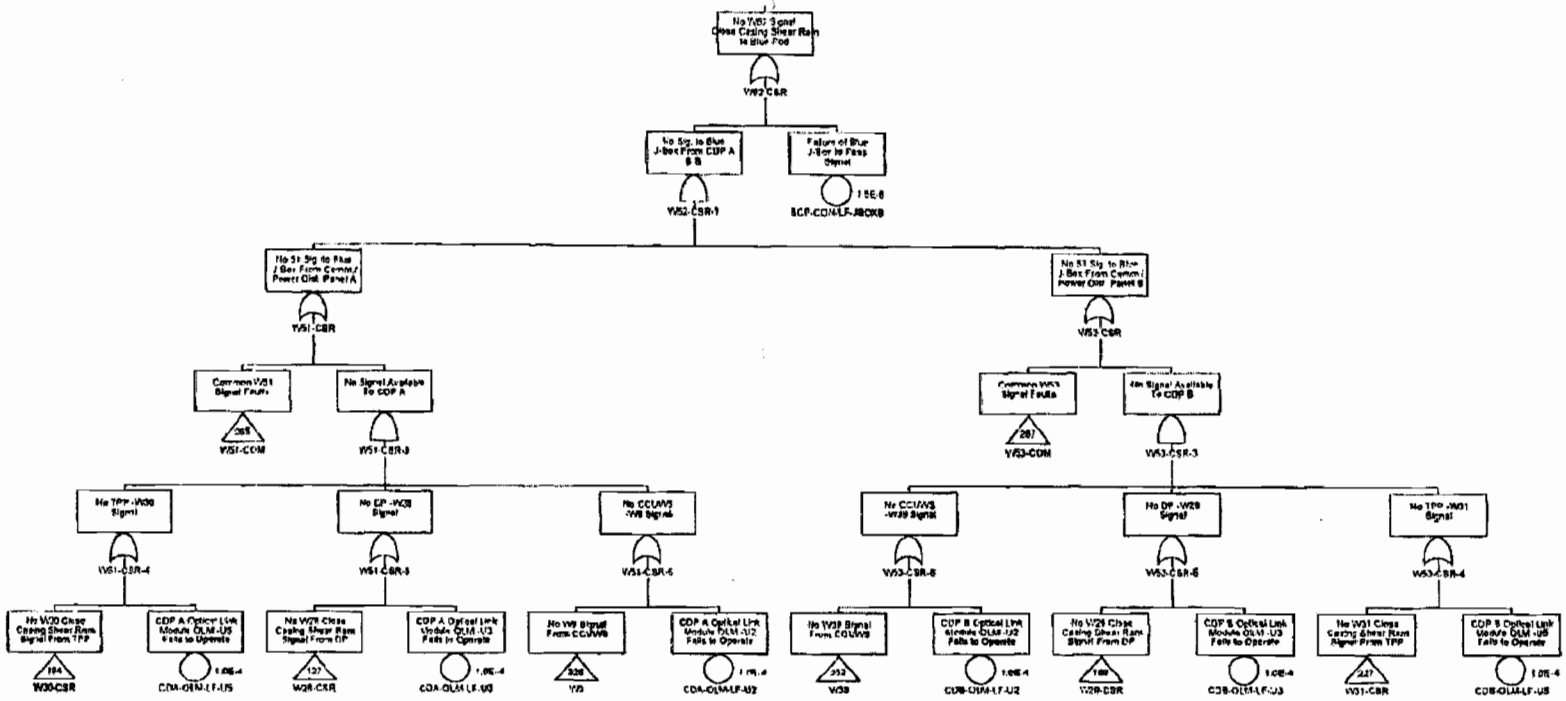

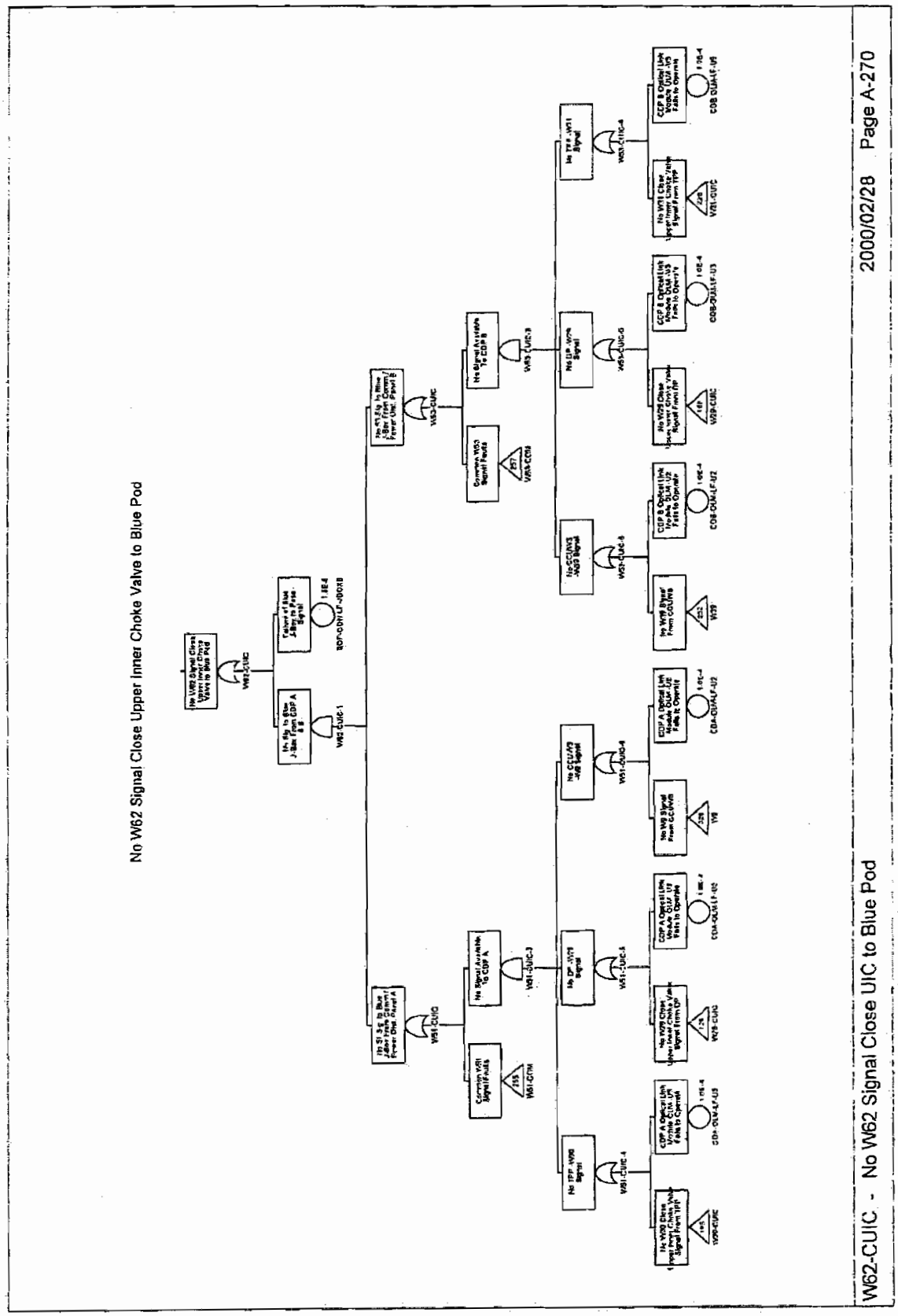
No W62 Signal Close Upper Inner Choke Valve to Blue Pod
W62-CUIC - No W62 Signal Close UIC to Blue Pod
2000/02/28 Page A-270

Confidential Treatment Requested by Transocean Holdings LLC

TRN-HCEC-00056718

No W62 Signal Close Upper Inner Kill Valve to Blue Pod

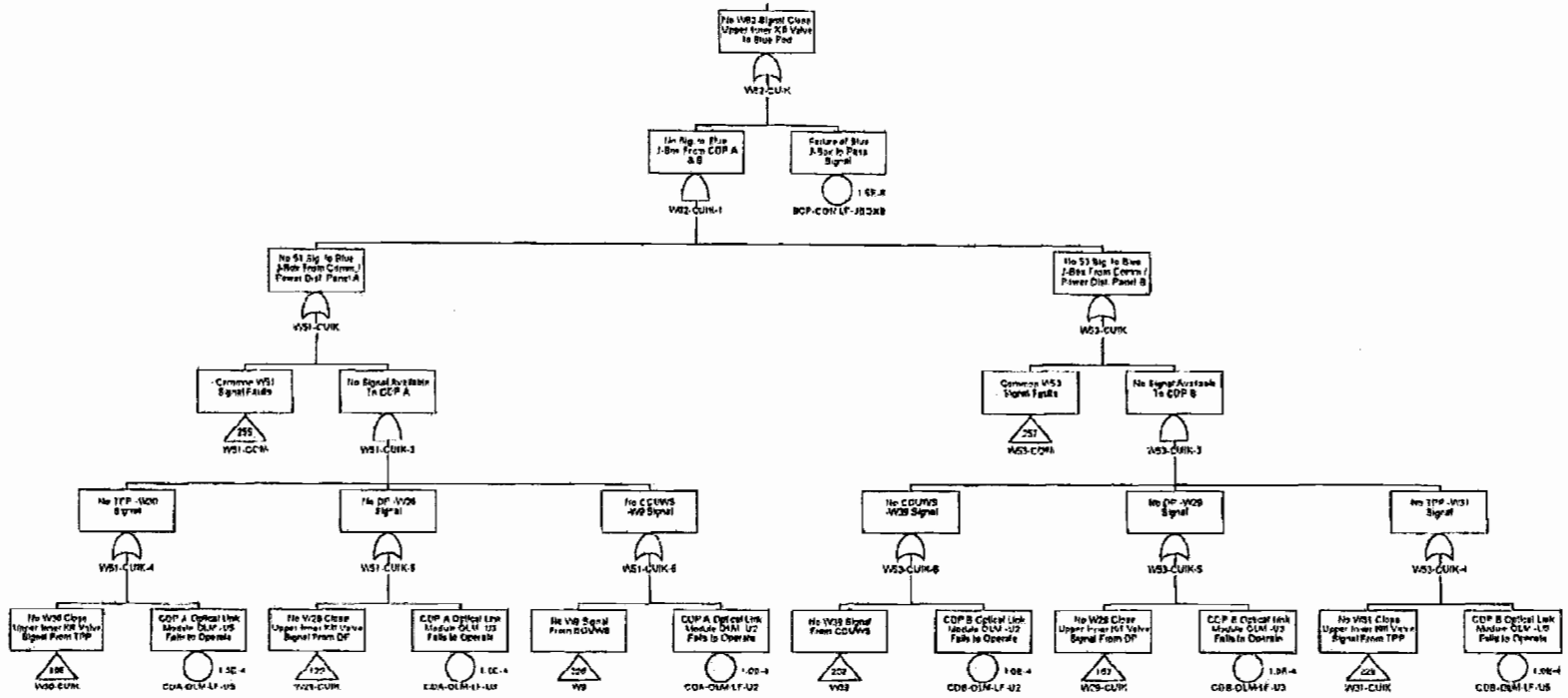

Confidential Treatment Requested by Transocean Holdings LLC

TRN-HCEC-00056719

No W62 Signal Close Upper Outer Choke Valve to Blue Pod

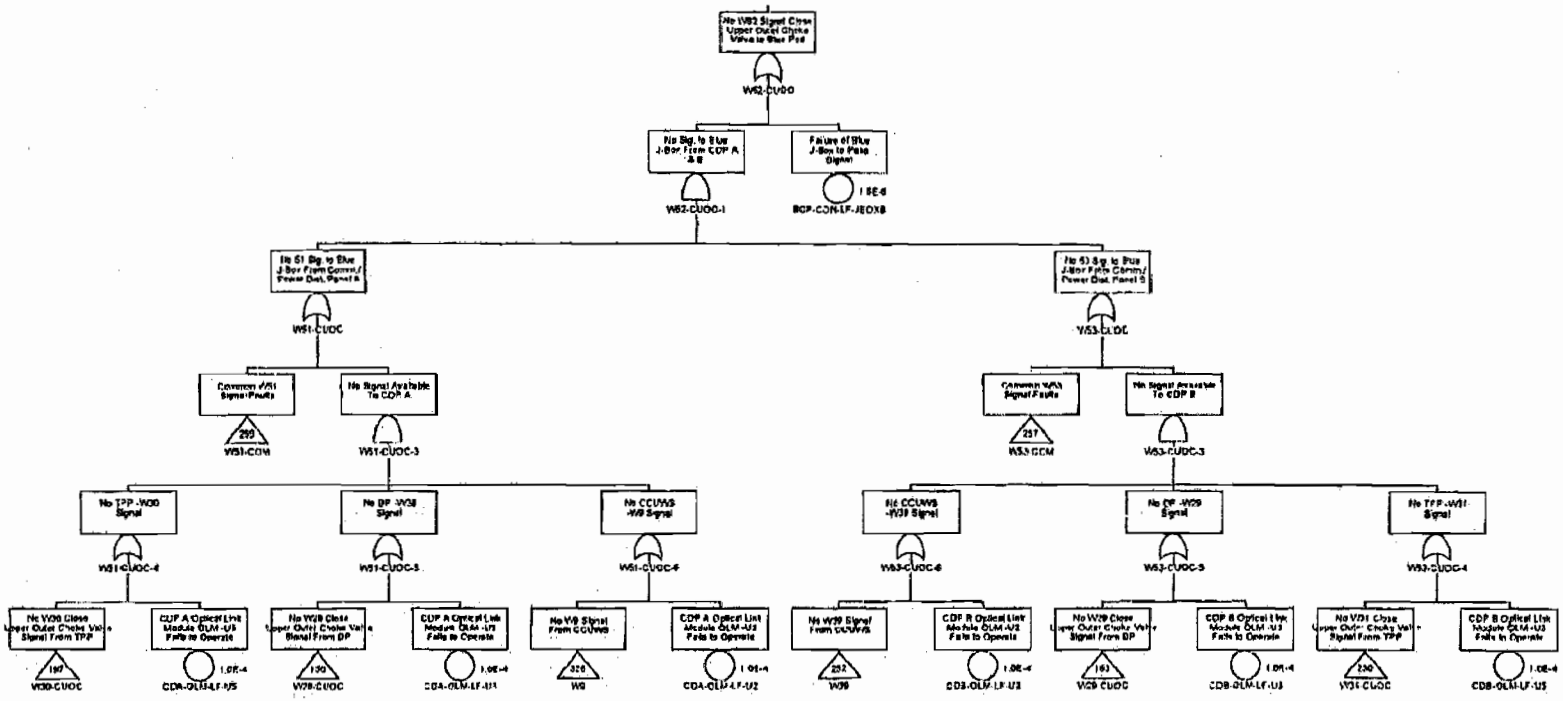

Confidential Treatment Requested by Transocean Holdings LLC

TRN-HCEC-00056720

No W62 Signal Close Upper Outer Kill Valve to Blue Pod

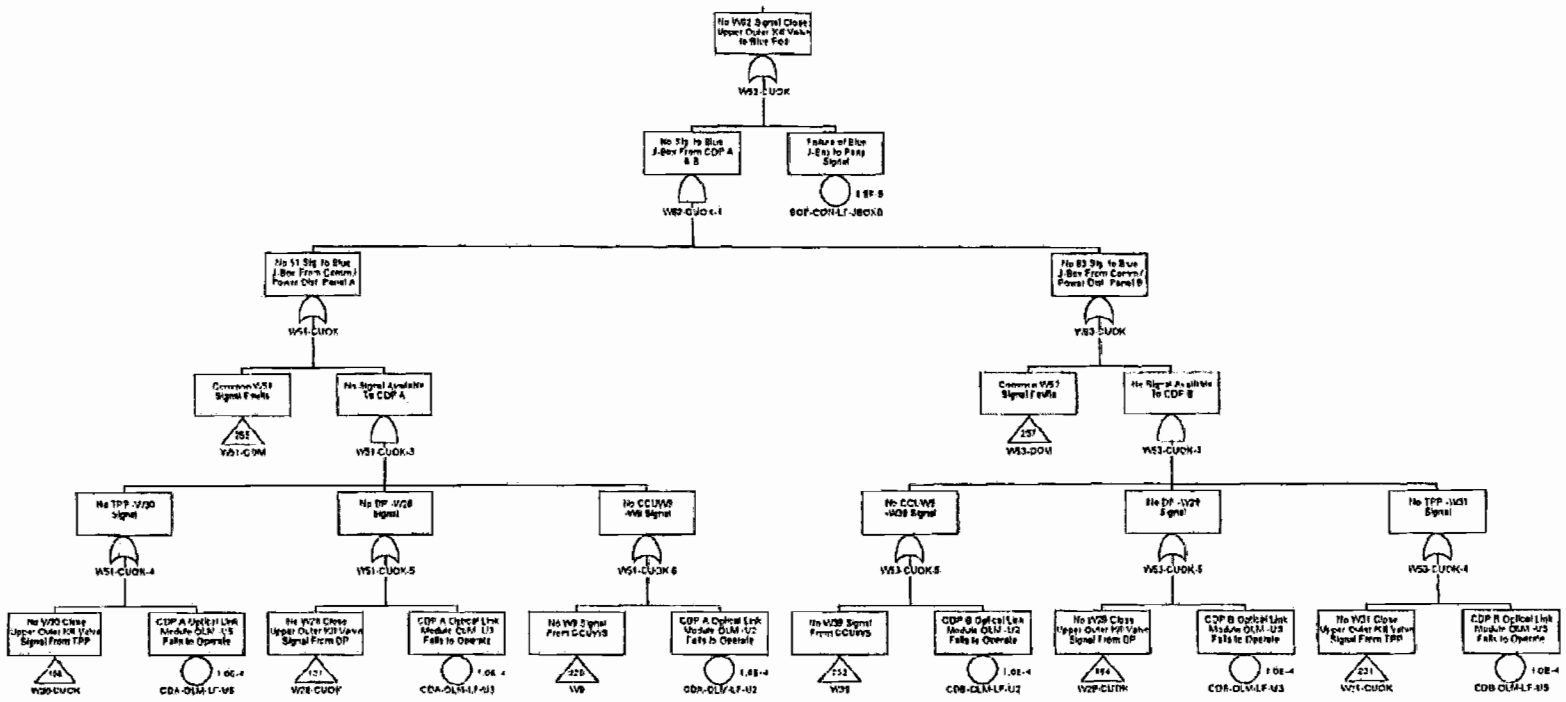

Confidential Treatment Requested by Transocean Holdings LLC

TRN-HCEC-00056721

No W62 Signal Close Lower Annular to Blue Pod

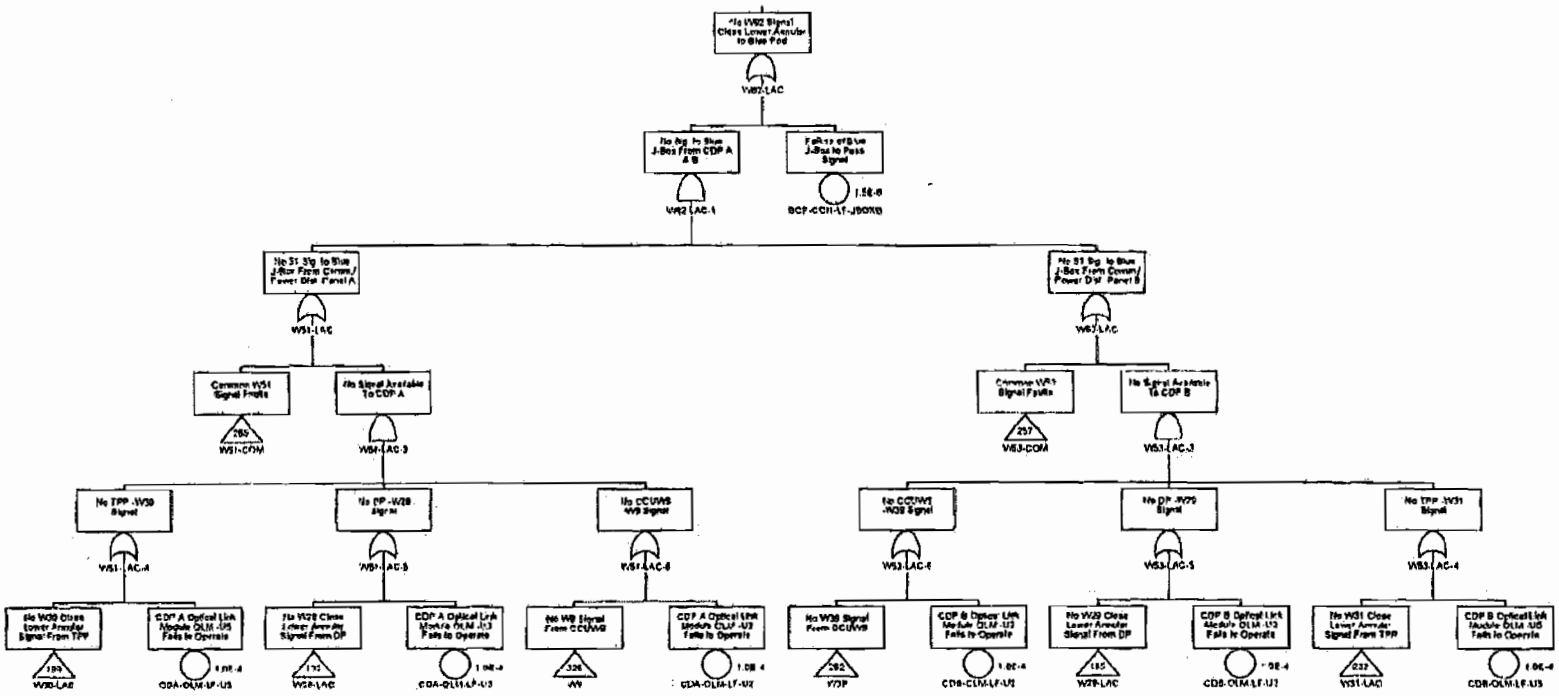

Confidential Treatment Requested by Transocean Holdings LLC

TRN-HCEC-00056722

No W62 Signal Close Lower Pipe Ram to Blue Pod

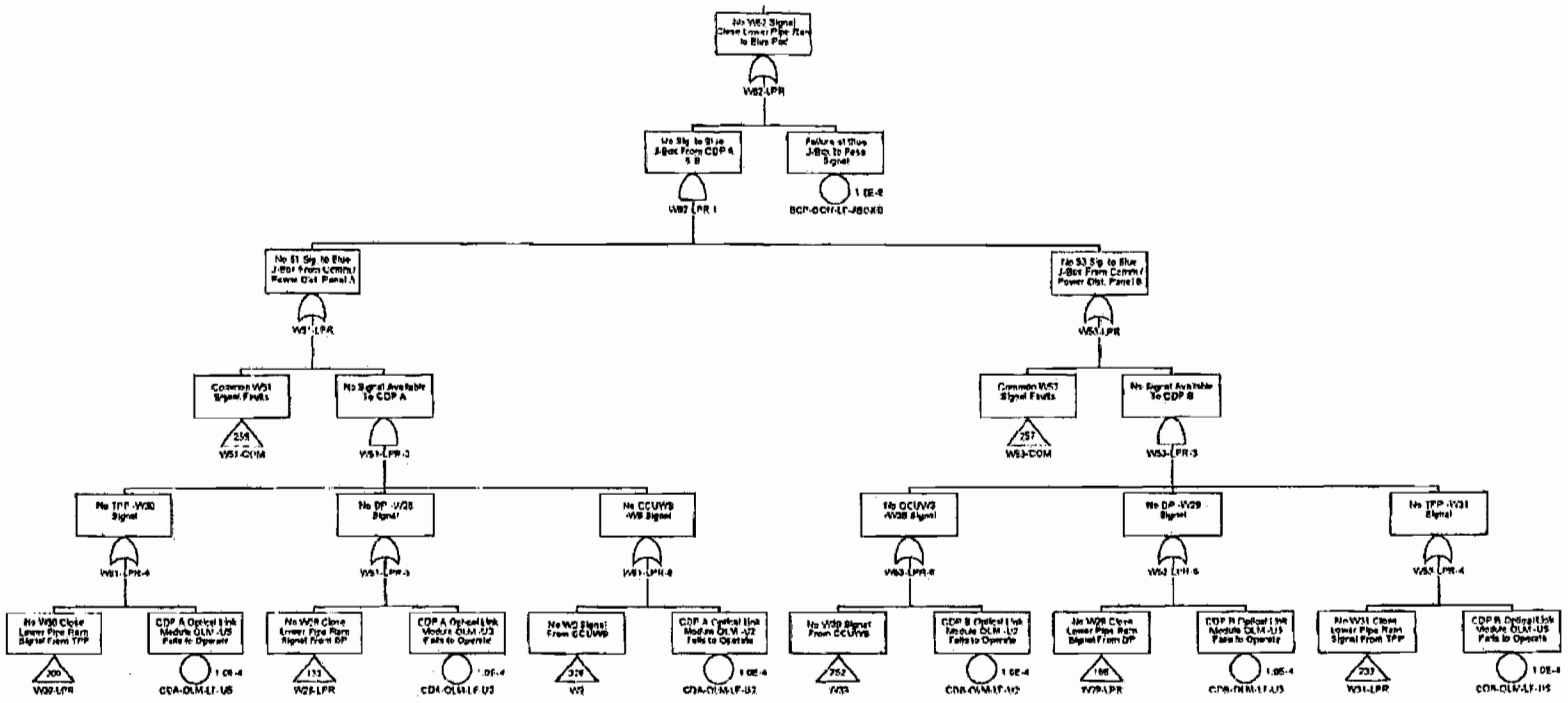

Confidential Treatment Requested by Transocean Holdings LLC

TRN-HCEC-00056723

No W62 Signal Close Middle Pipe Ram to Blue Pod

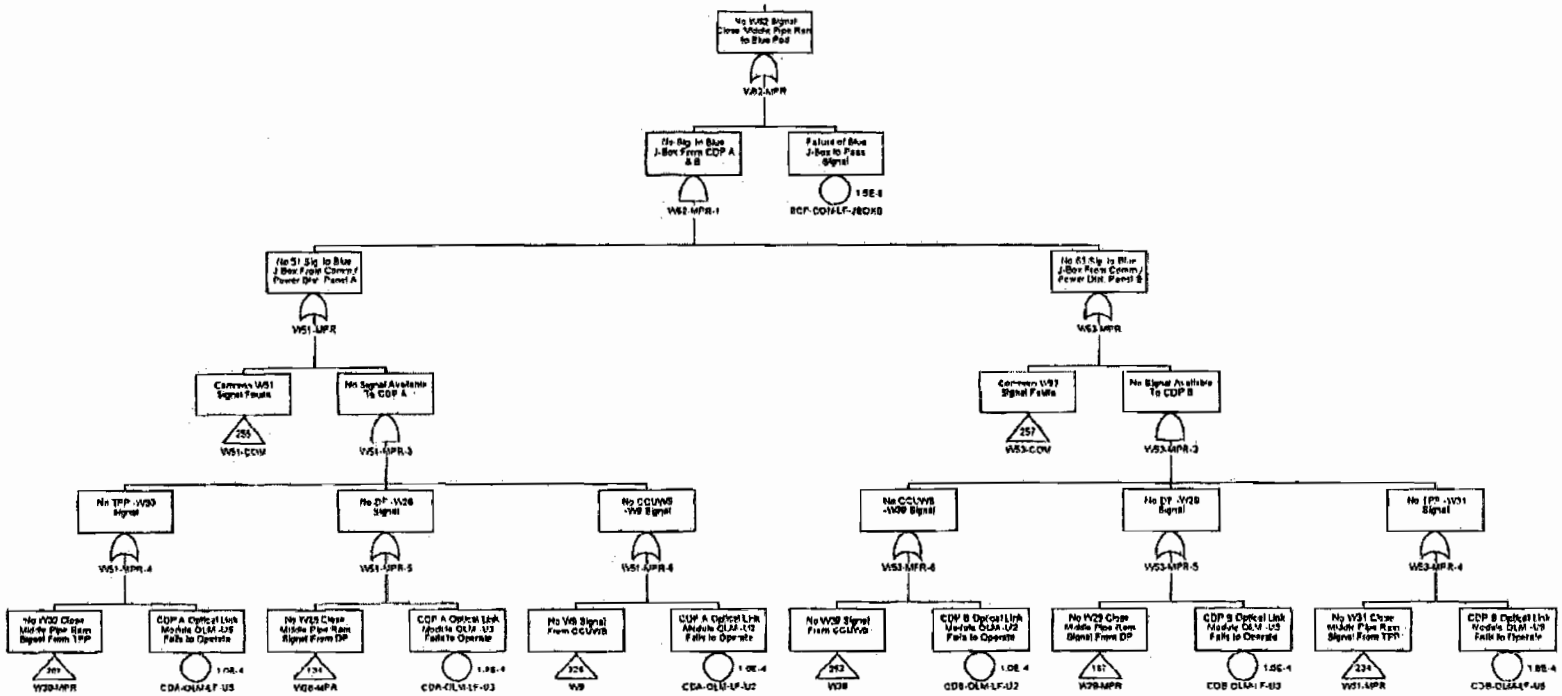

Confidential Treatment Requested by Transocean Holdings LLC

TRN-HCEC-00056724

No W62 Signal Open Lower Inner Choke Valve to Blue Pod

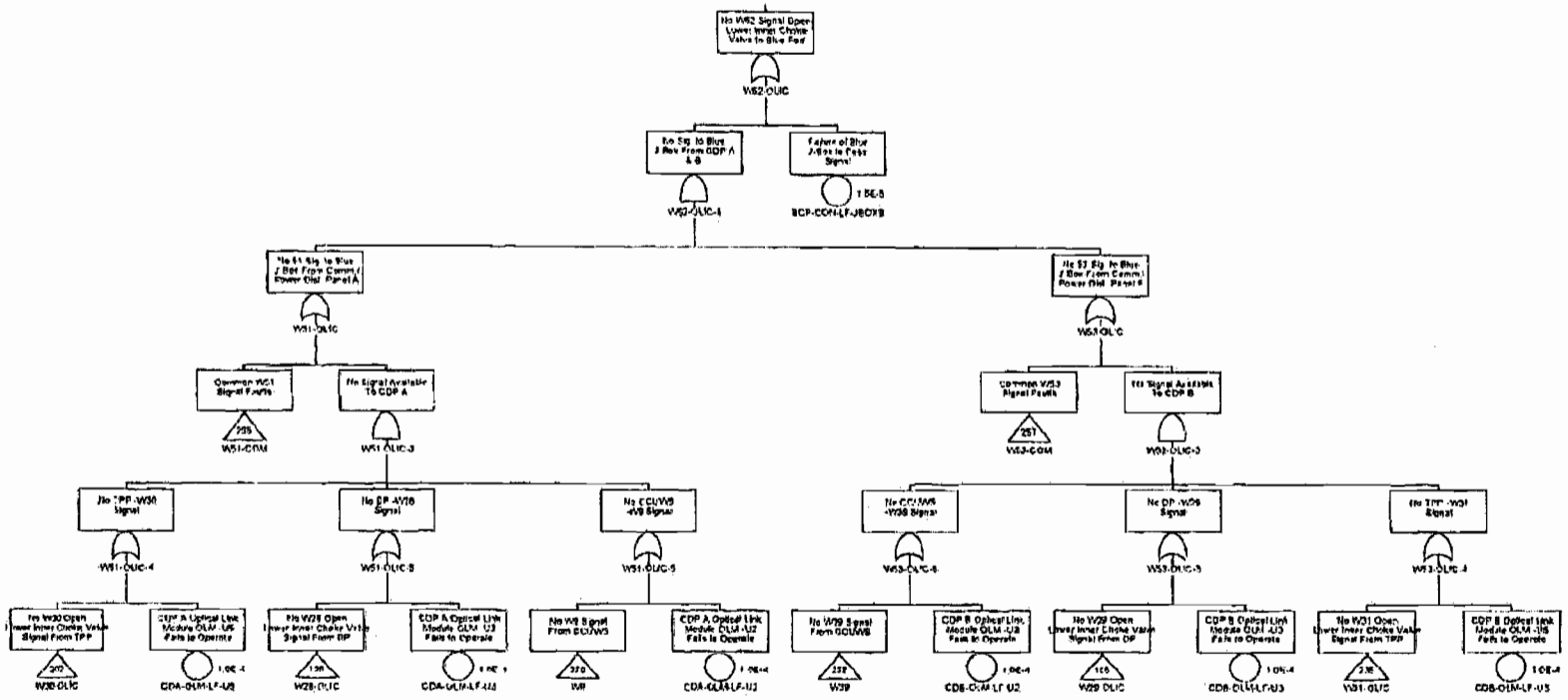

Confidential Treatment Requested by Transocean Holdings LLC

TRN-HCEC-00056725

No W62 Signal Open Lower Inner Kill Valve to Blue Pod

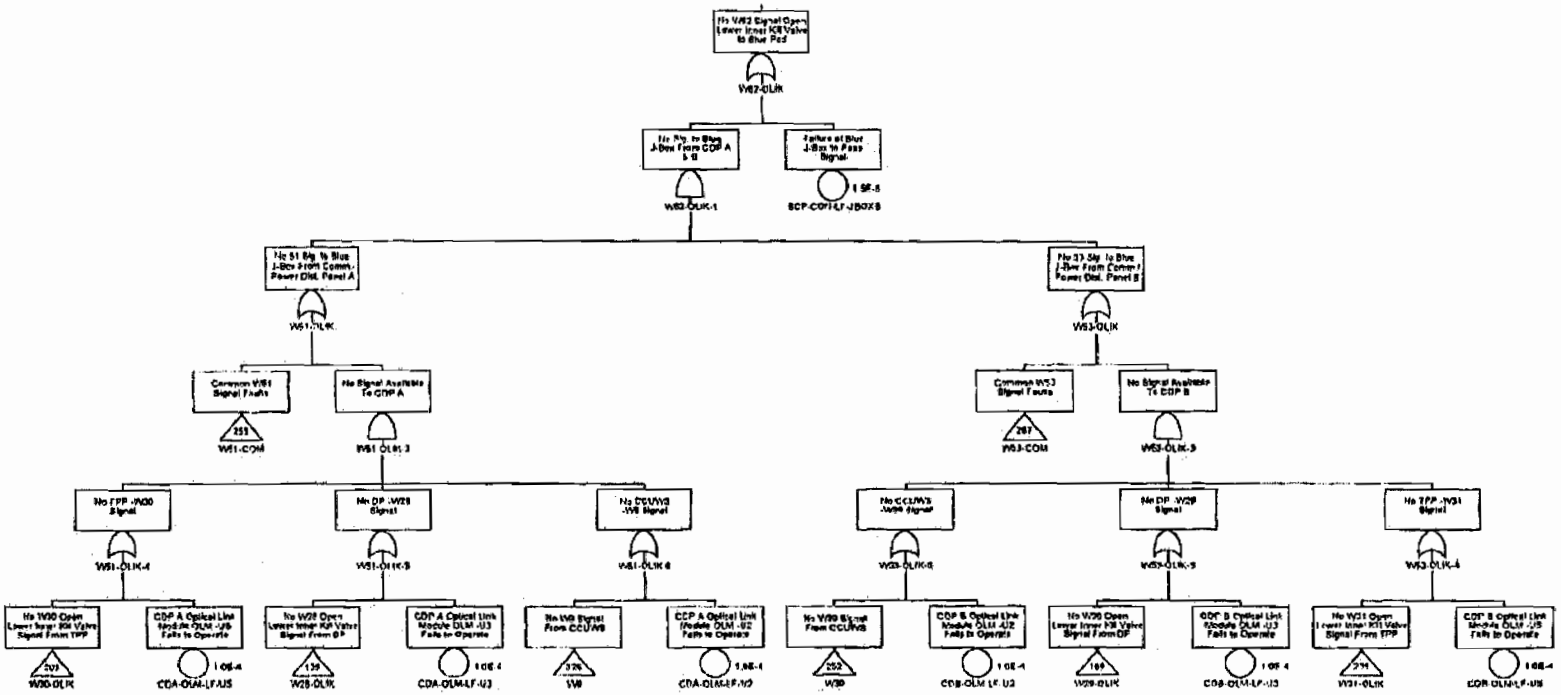

Confidential Treatment Requested by Transocean Holdings LLC

TRN-HCEC-00056726

No W62 Signal Open Lower Outer Choke Valve to Blue Pod

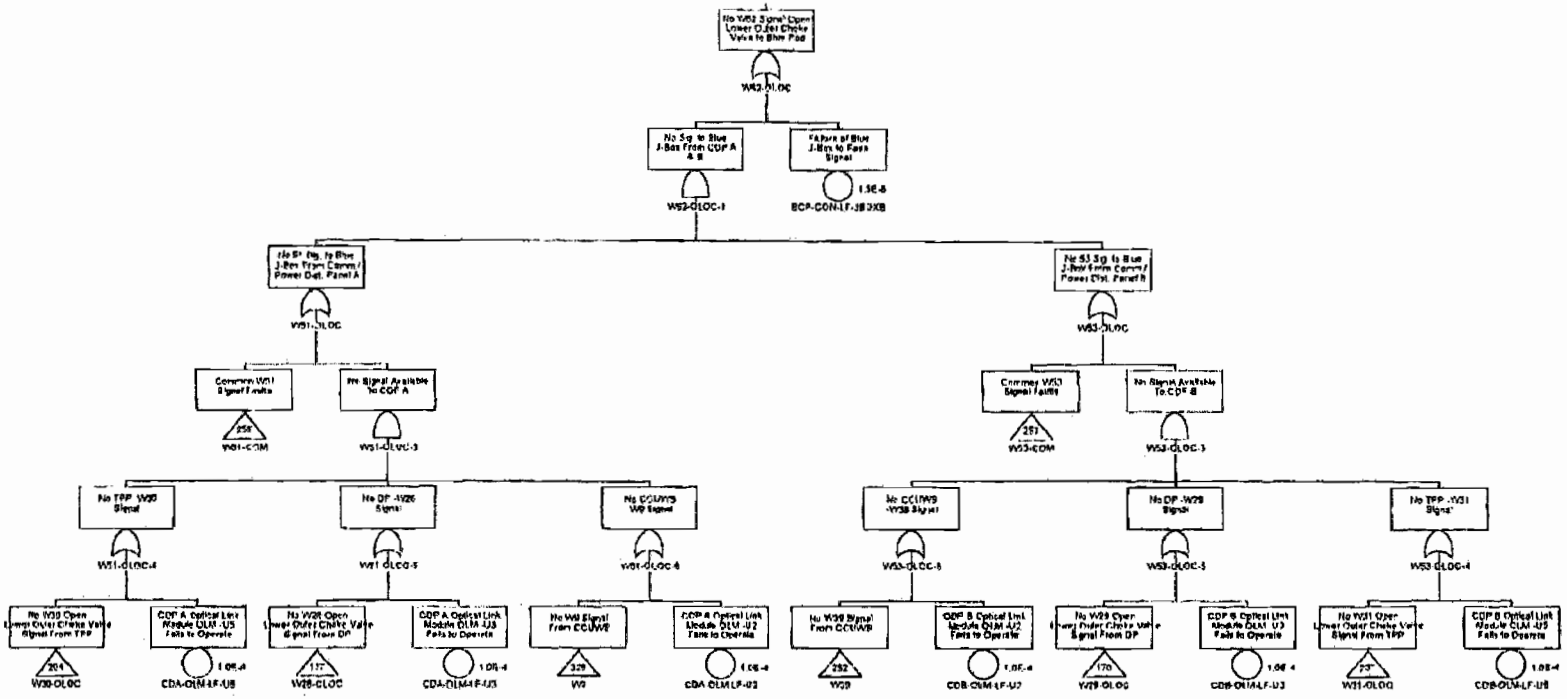

Confidential Treatment Requested by Transocean Holdings LLC

TRN-HCEC-00056727

No W62 Signal Open Lower Outer Kill Valve to Blue Pod

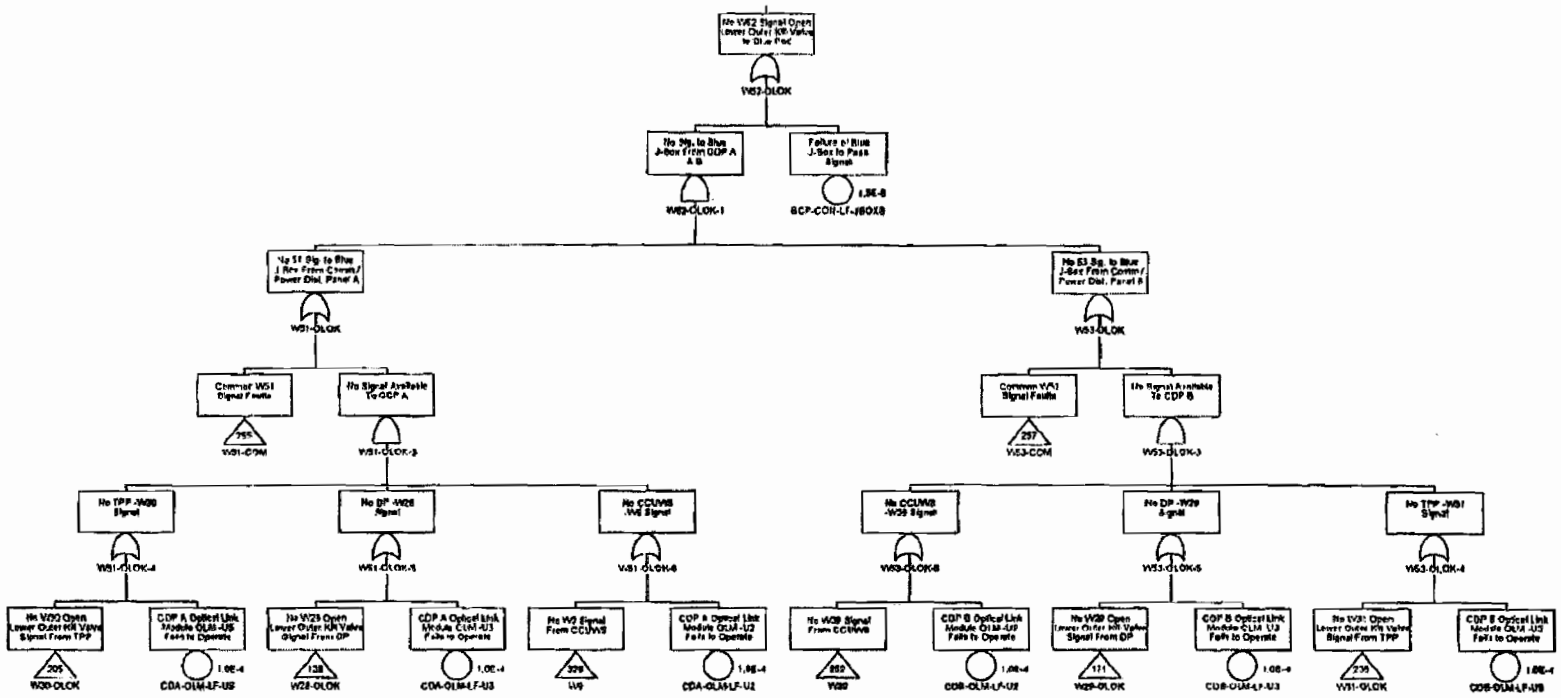

Confidential Treatment Requested by Transocean Holdings LLC

TRN-HCEC-00056728

No W62 Signal Open Upper Inner Choke Valve to Blue Pod

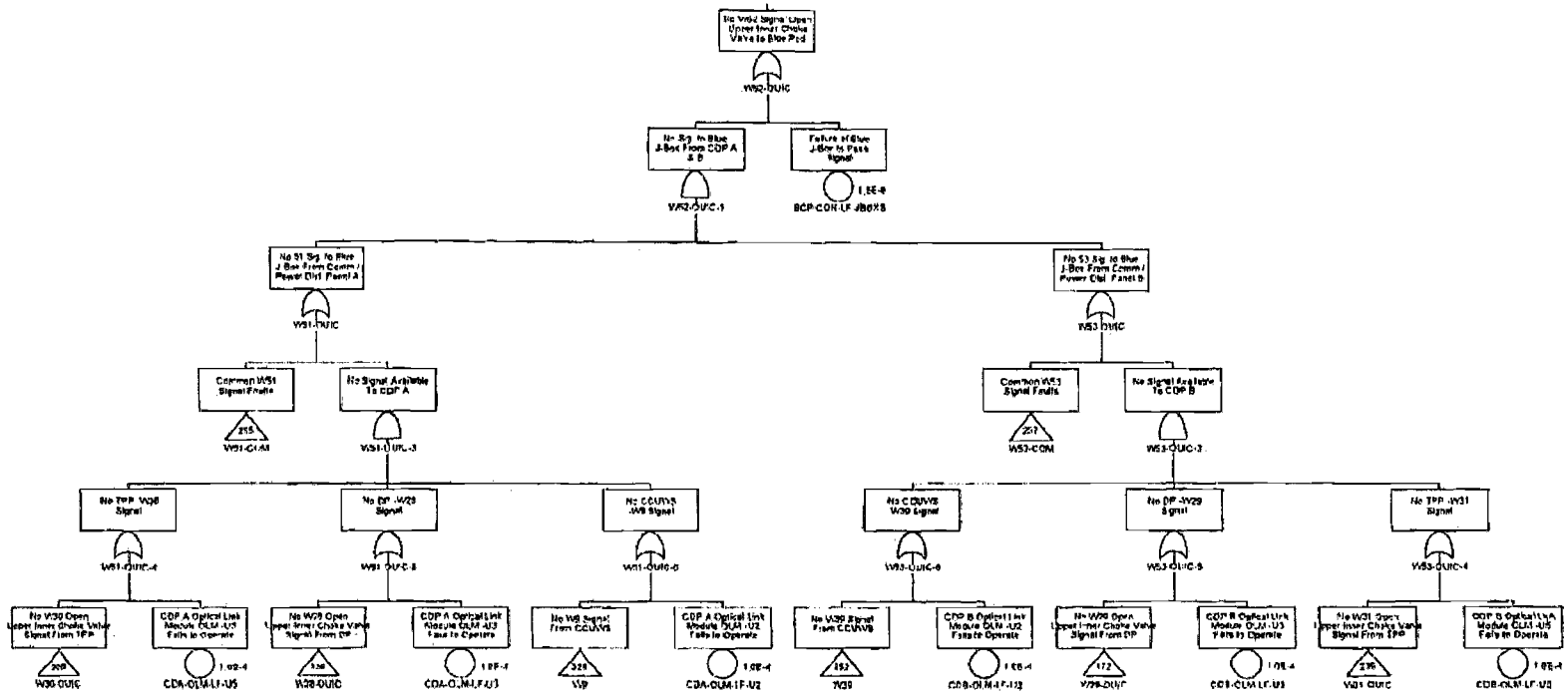

Confidential Treatment Requested by Transocean Holdings LLC

TRN-HCEC-00056729

No W62 Signal Open Upper Inner Kill Valve to Blue Pod

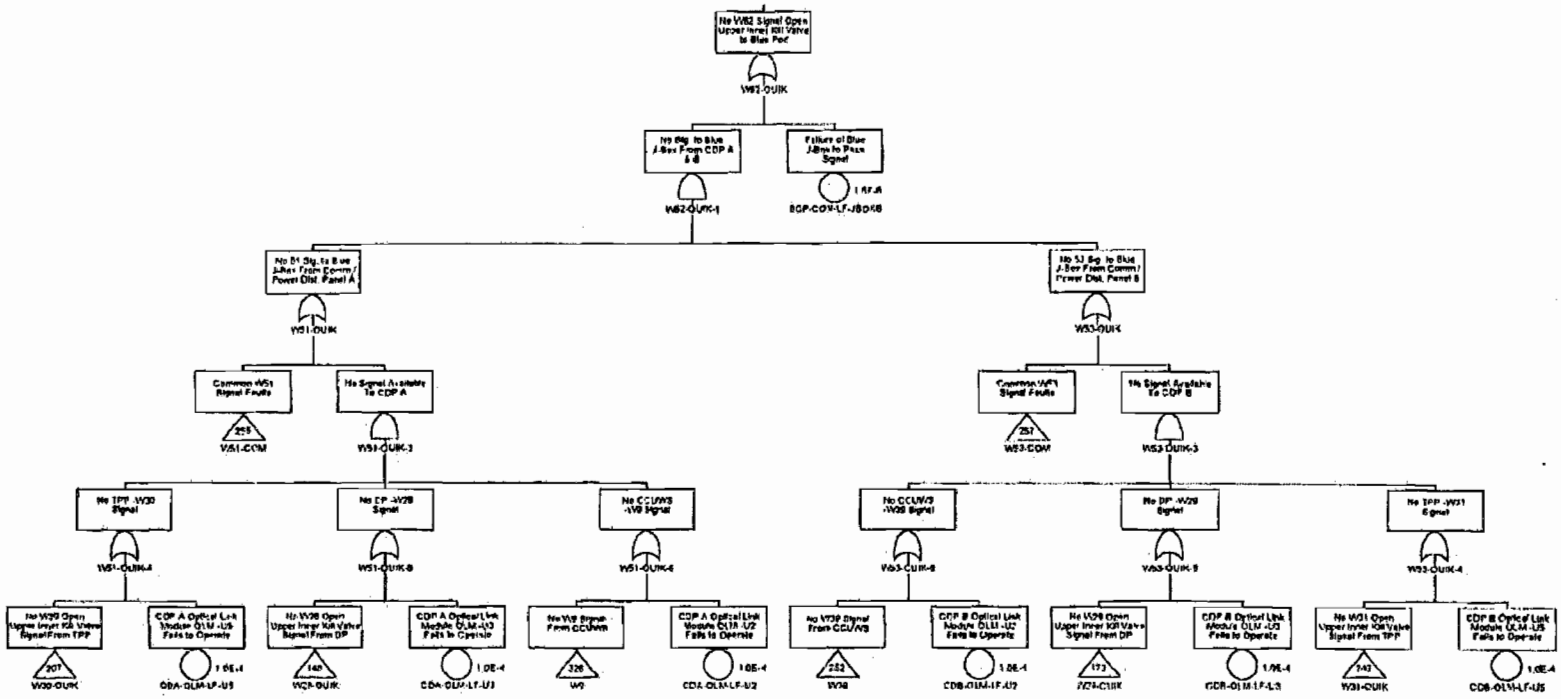

Confidential Treatment Requested by Transocean Holdings LLC

TRN-HCEC-00056730

No W62 Signal Open Upper Outer Choke Valve to Blue Pod

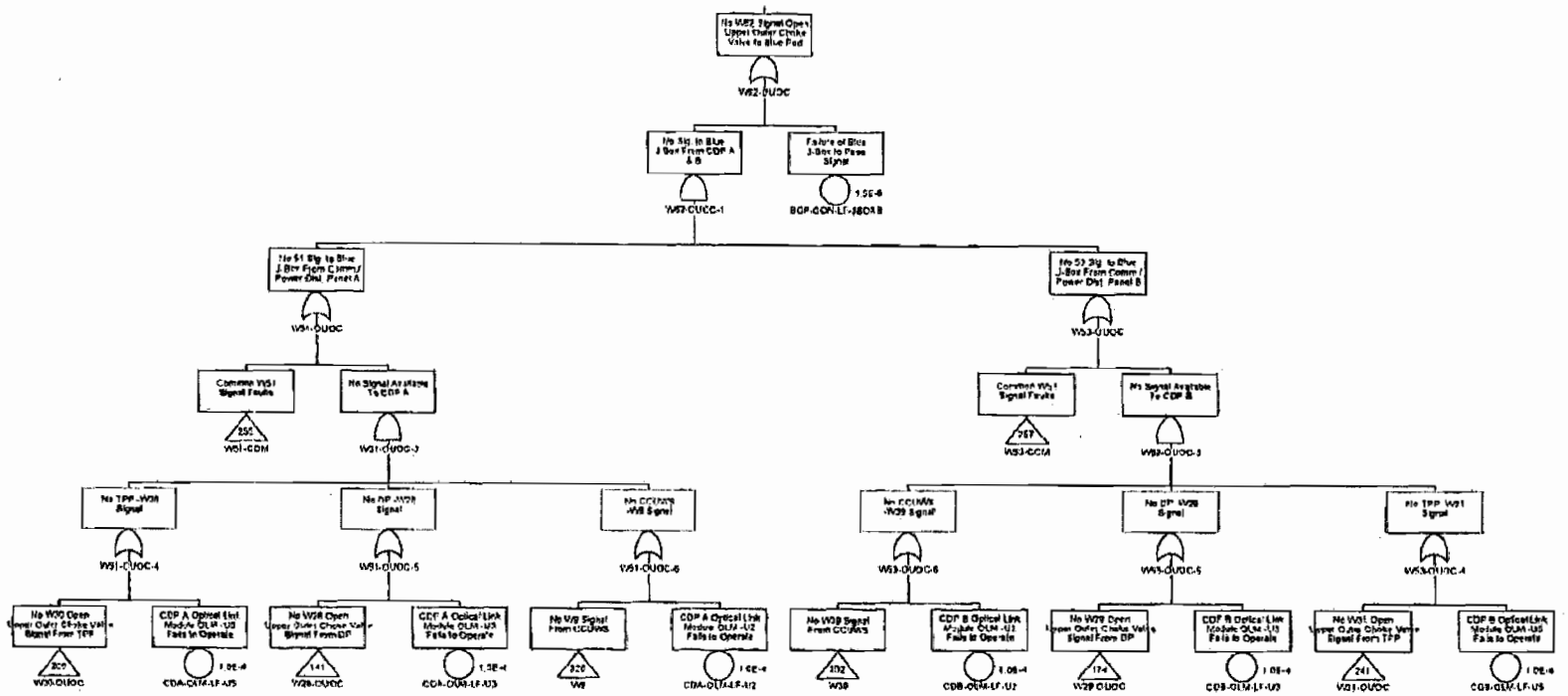

Confidential Treatment Requested by Transocean Holdings LLC

TRN-HCEC-00056731

No W62 Signal Open Upper Outer Kill Valve to Blue Pod

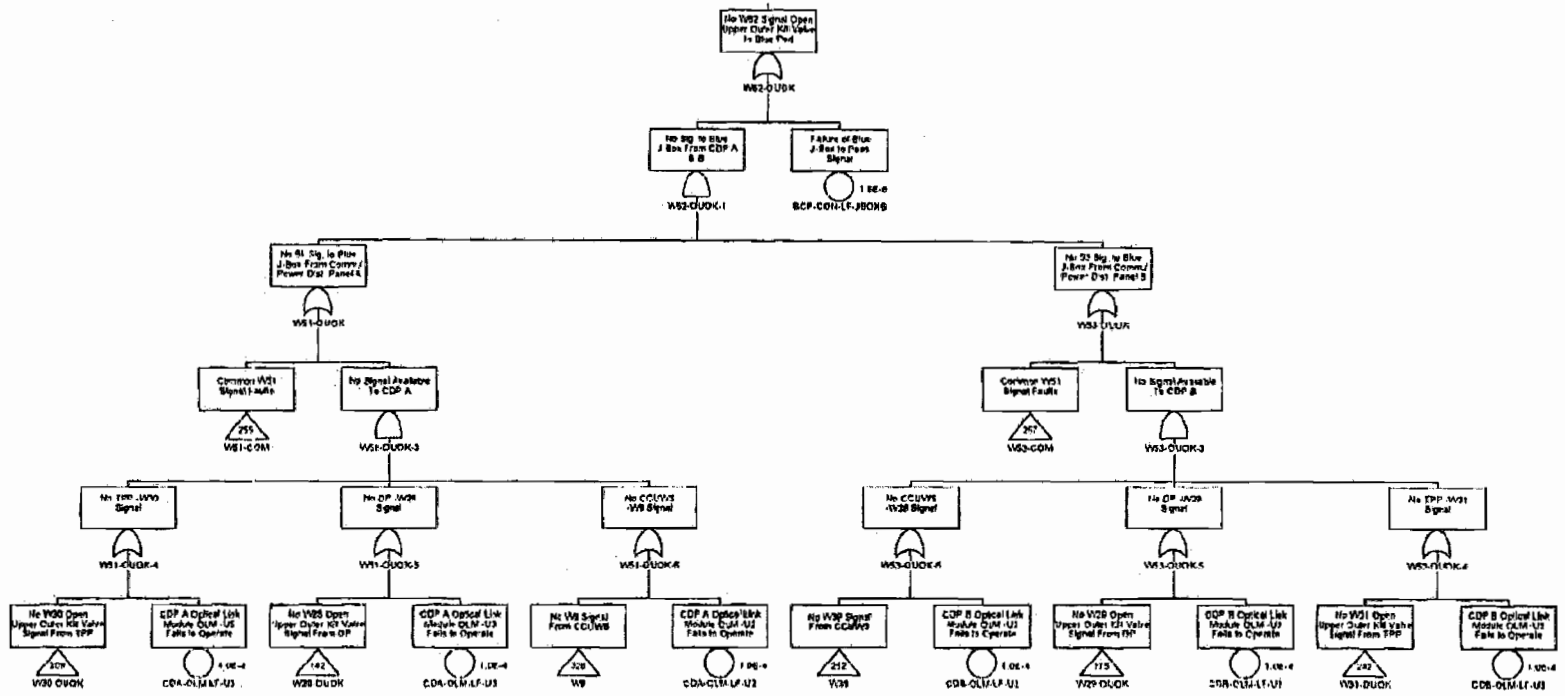

Confidential Treatment Requested by Transocean Holdings LLC

TRN-HCEC-00056732

No W62 Signal Unlatch Pri. Disconnect to Blue Pod

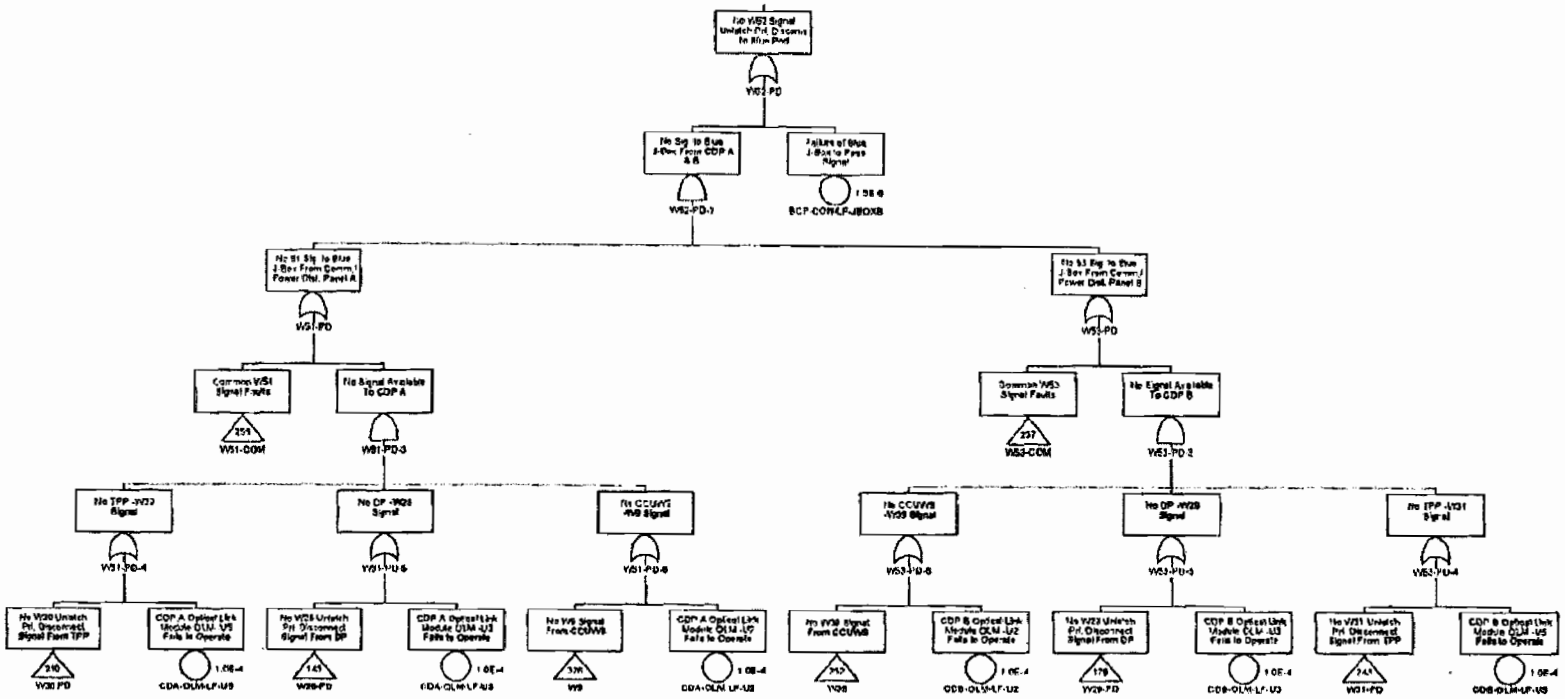

Confidential Treatment Requested by Transocean Holdings LLC

TRN-HCEC-00056733

No W62 Signal Open Pod Select to Blue Pod

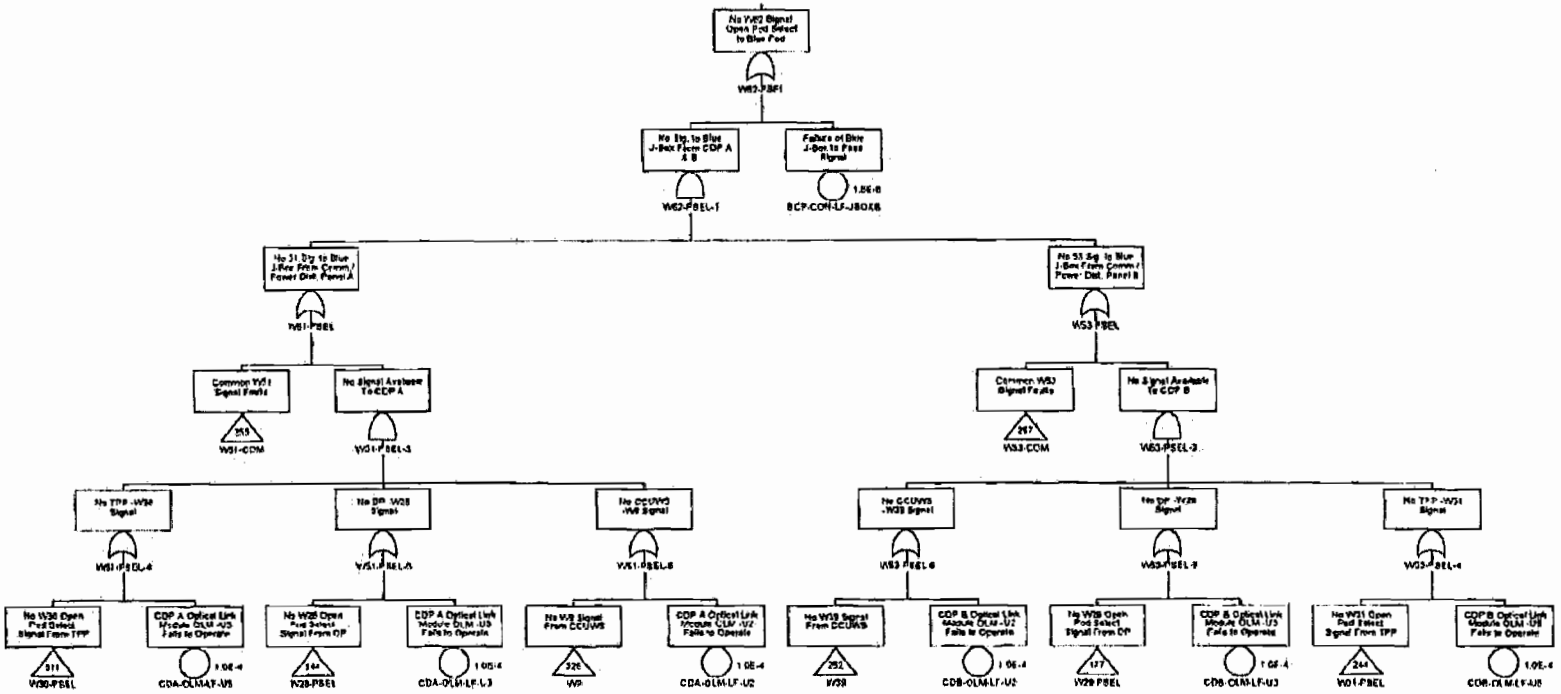

Confidential Treatment Requested by Transocean Holdings LLC

TRN-HCEC-00056734

No W62 Signal Unlatch Sec. Disconnect to Blue Pod

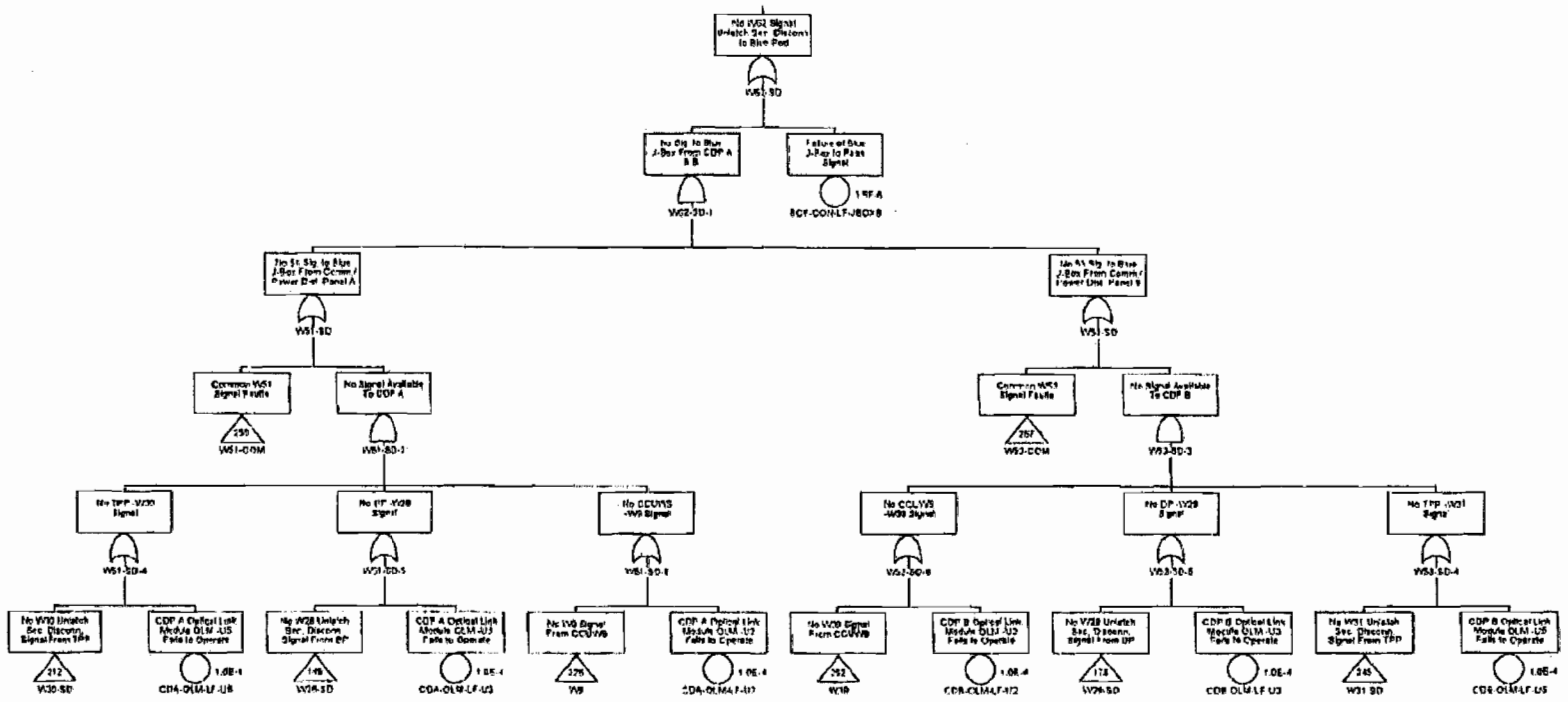

Confidential Treatment Requested by Transocean Holdings LLC

TRN-HCEC-00056735

No W62 Signal Close Upper Annular to Blue Pod

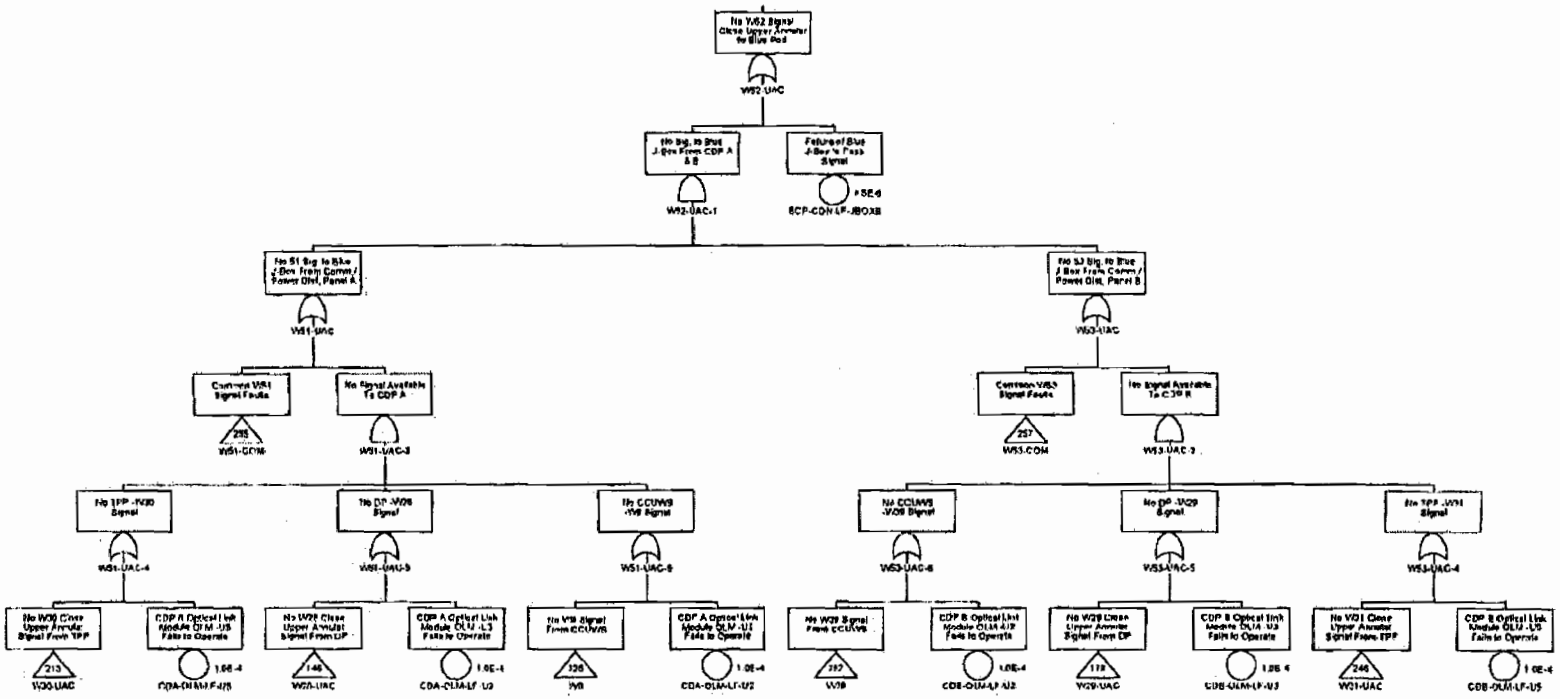

Confidential Treatment Requested by Transocean Holdings LLC

TRN-HCEC-00056736

No W62 Signal Close HP Shear to Blue Pod

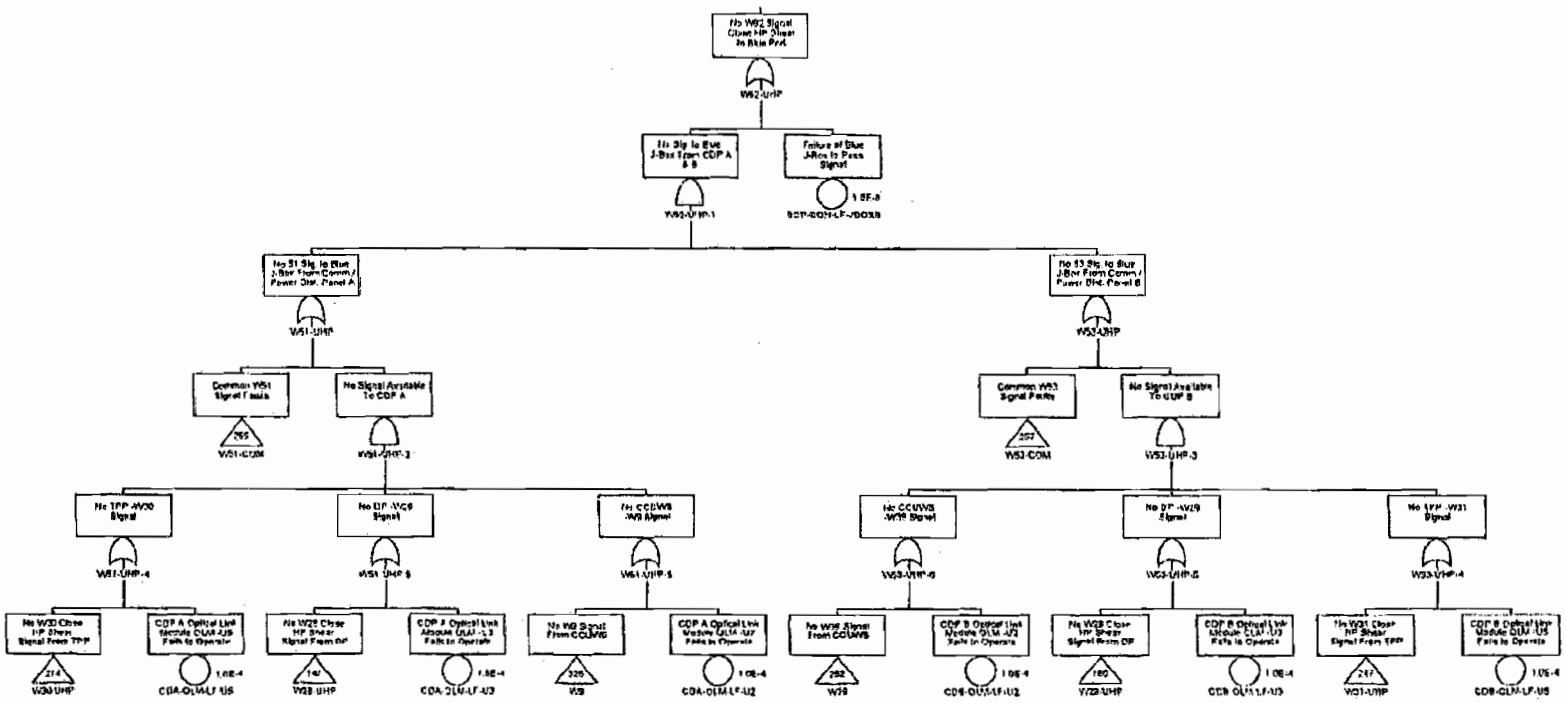

Confidential Treatment Requested by Transocean Holdings LLC

TRN-HCEC-00056737

No W62 Signal Close Upper Pipe Ram to Blue Pod

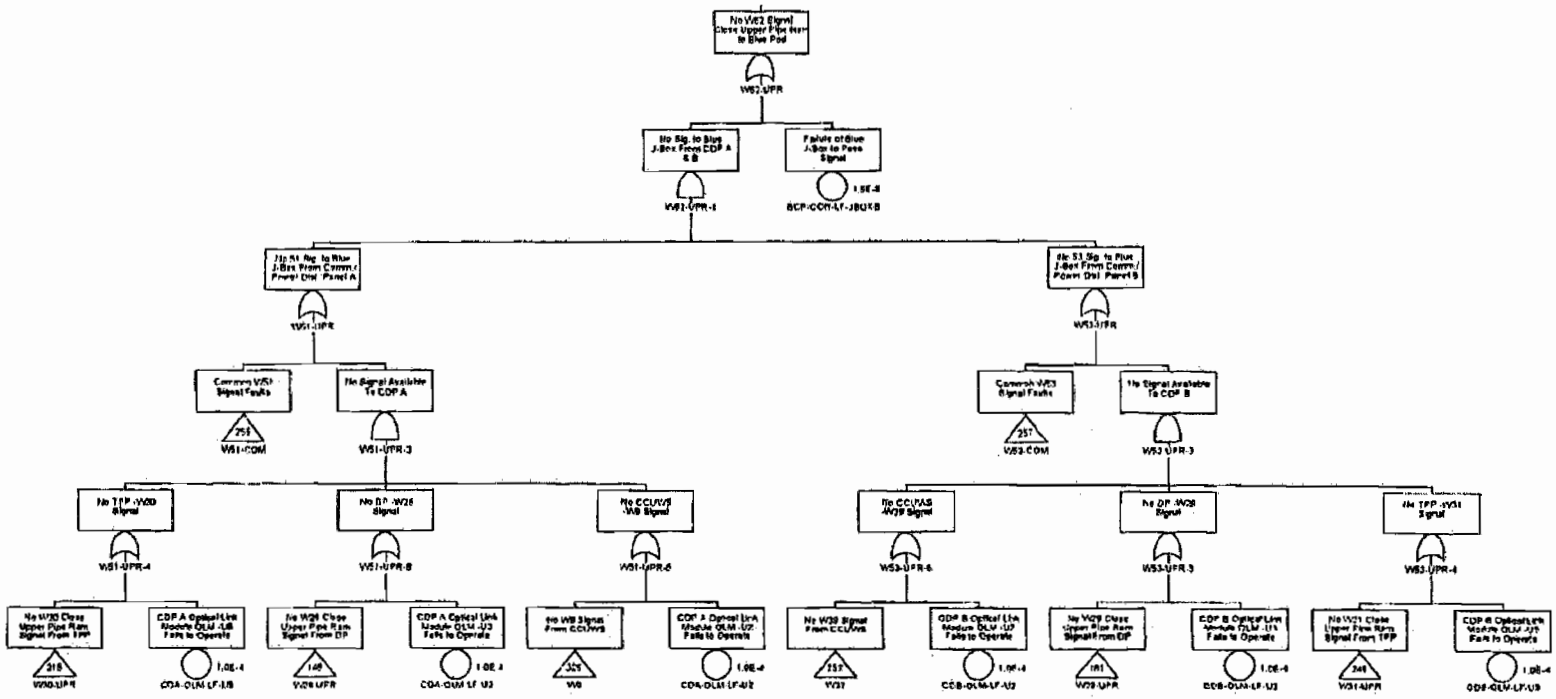

W62-UPR - No W62 Signal Close UPR to Blue Pod

Confidential Treatment Requested by Transocean Holdings LLC

TRN-HCEC-00056738

No W62 Signal Close Blind Shear Ram to Blue Pod

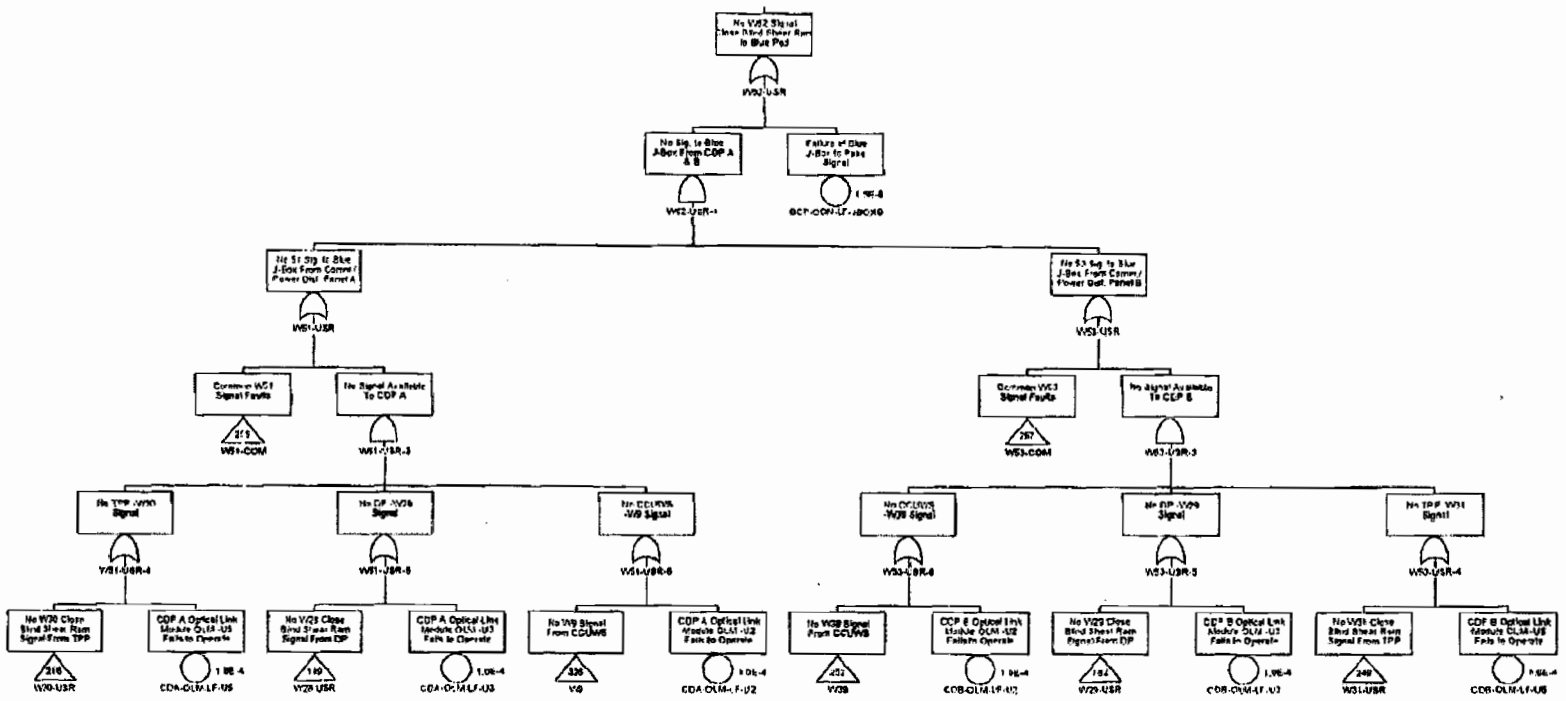

Confidential Treatment Requested by Transocean Holdings LLC

TRN-HCEC-00056739

No W62 Signal Open Yel. Conduit Supply to Blue Pod

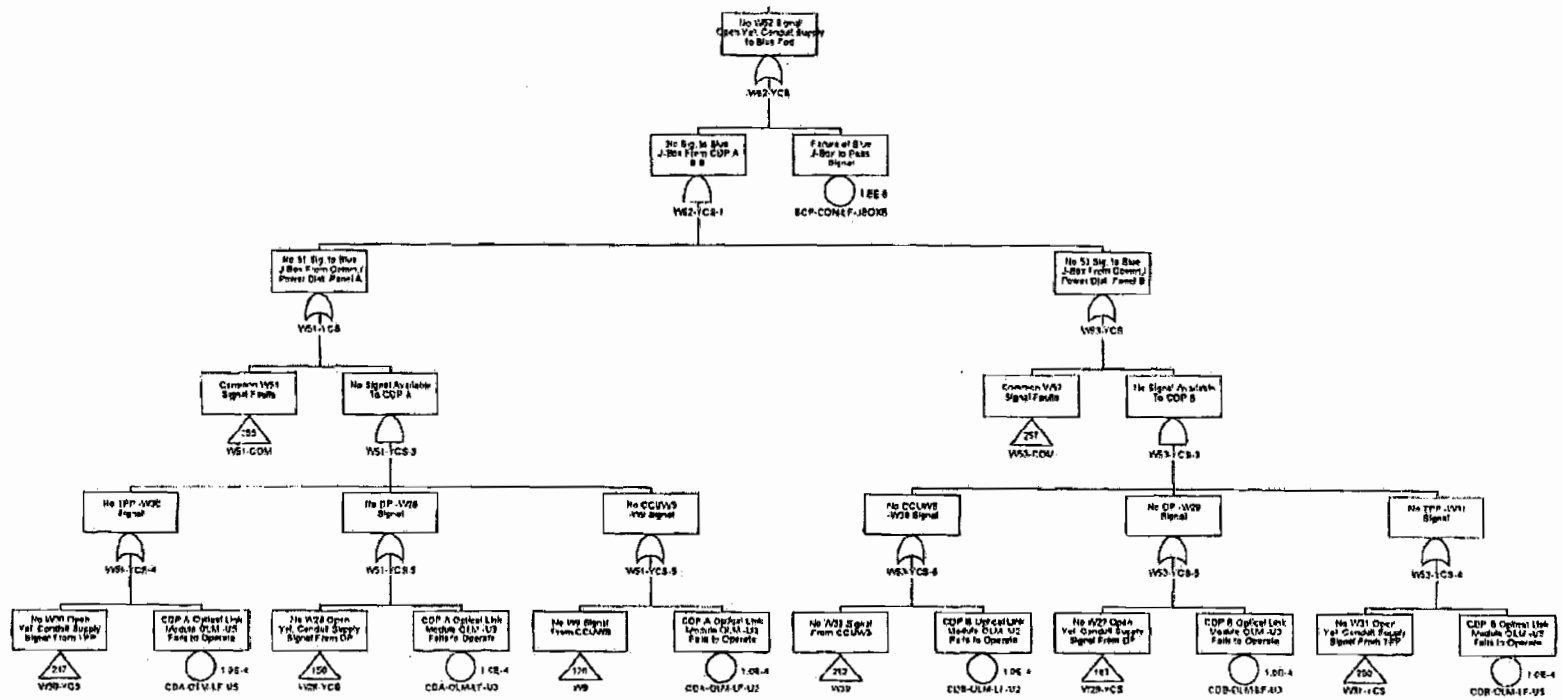

W62-YCS - No W62 Signal to Blue Pod

Confidential Treatment Requested by Transocean Holdings LLC

TRN-HCEC-00056740

No W62 Signal Open Yel. HL Supply to Blue Pod

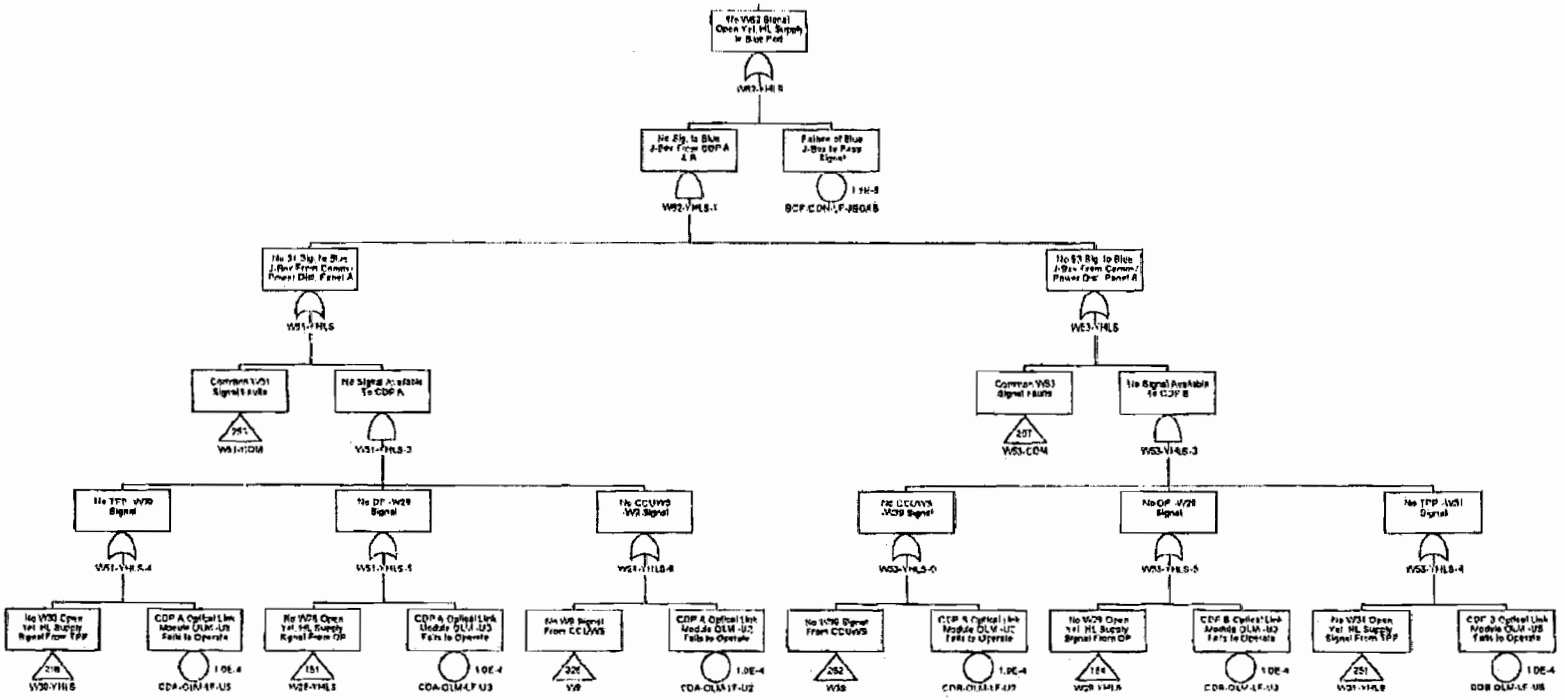

Confidential Treatment Requested by Transocean Holdings LLC

TRN-HCEC-00056741

No W63 Signal Open Blue Conduit Supply to Yellow Pod

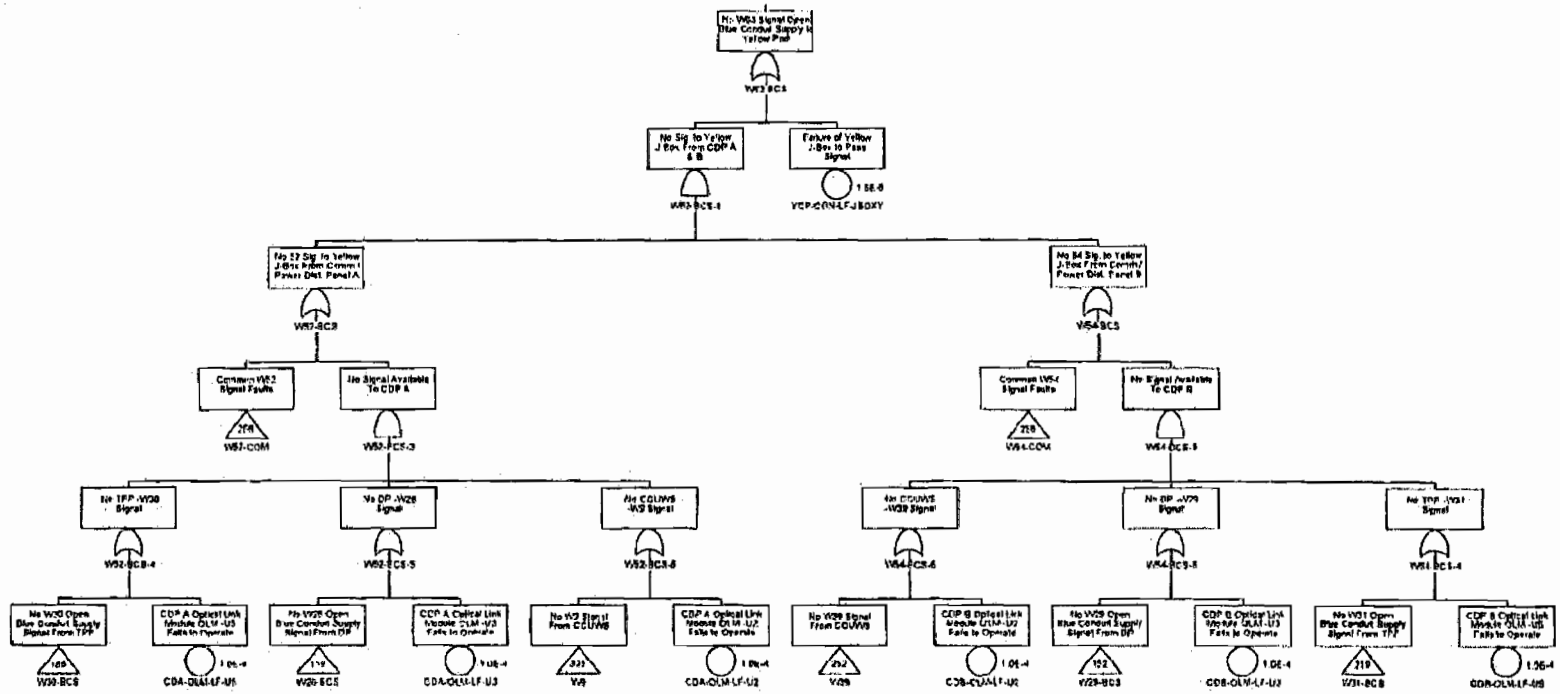

Confidential Treatment Requested by Transocean Holdings LLC

TRN-HCEC-00056742

No W63 Signal Open Blue HL Supply to Yellow Pod

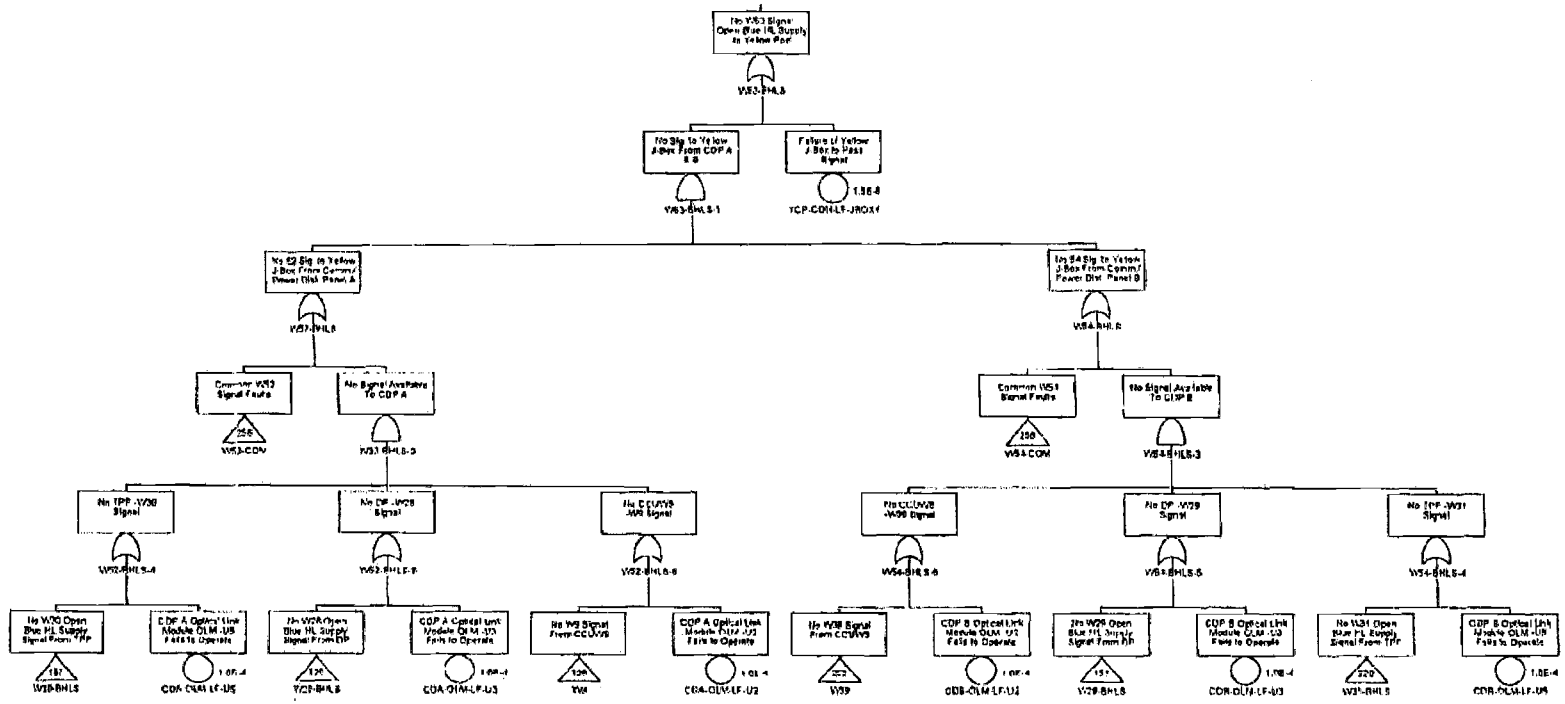

Confidential Treatment Requested by Transocean Holdings LLC

TRN-HCEC-00056743

No W63 Signal Close HP Casing Shear to Yellow Pod

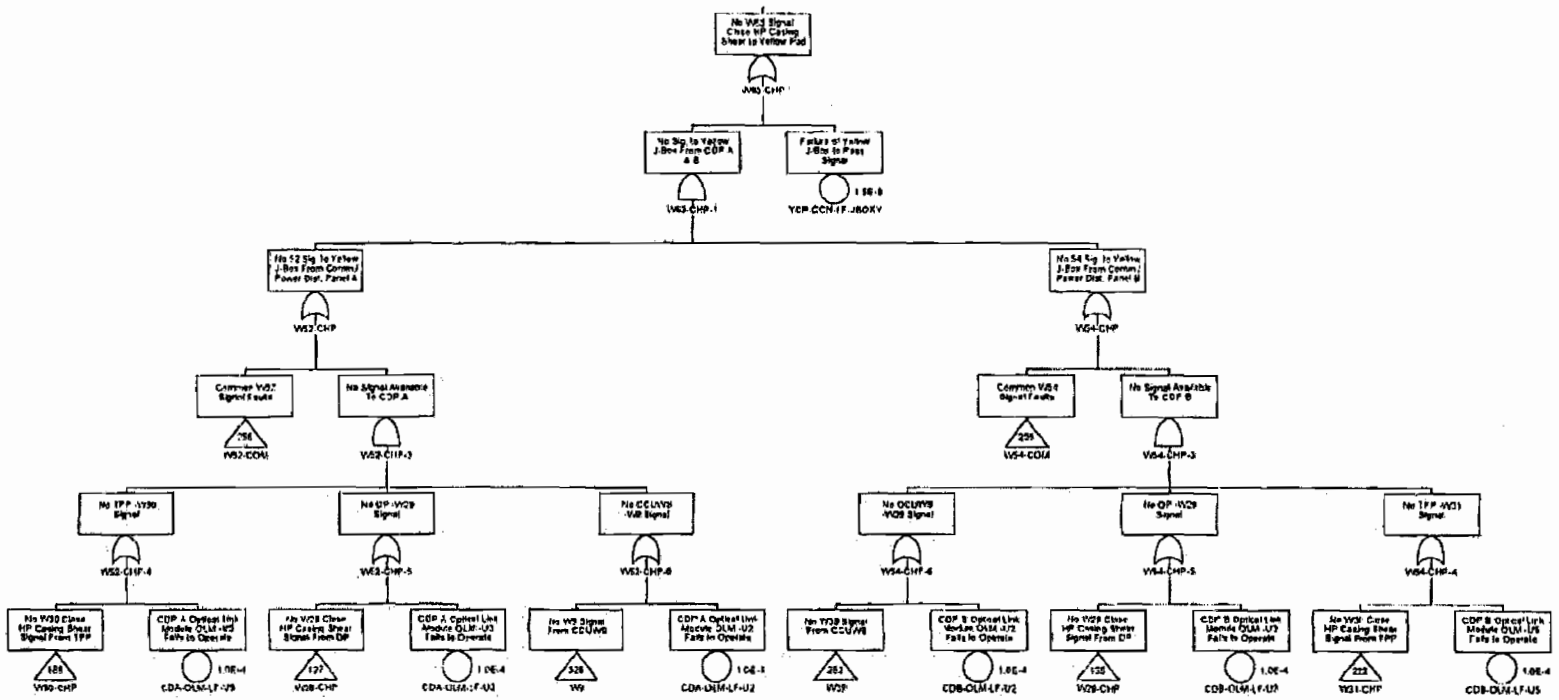

W63-CHP - No W63 Signal to Yellow Pod 2000/02/28 Page A-296

Confidential Treatment Requested by Transocean Holdings LLC

TRN-HCEC-00056744

No W63 Signal Close Lower Inner Choke Valve to Yellow Pod

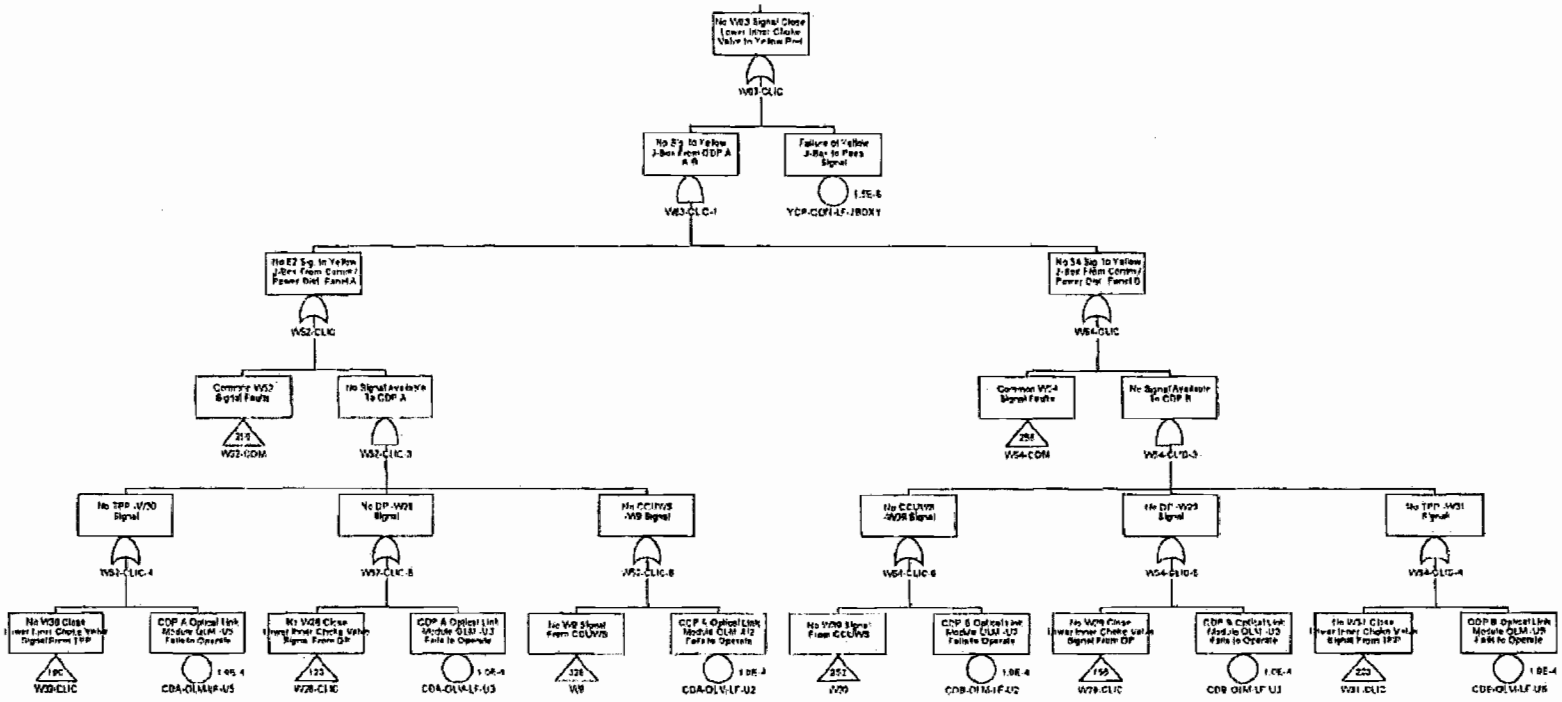

Confidential Treatment Requested by Transocean Holdings LLC

TRN-HCEC-00056745

No W63 Signal Close Lower Inner Kill Valve to Yellow Pod

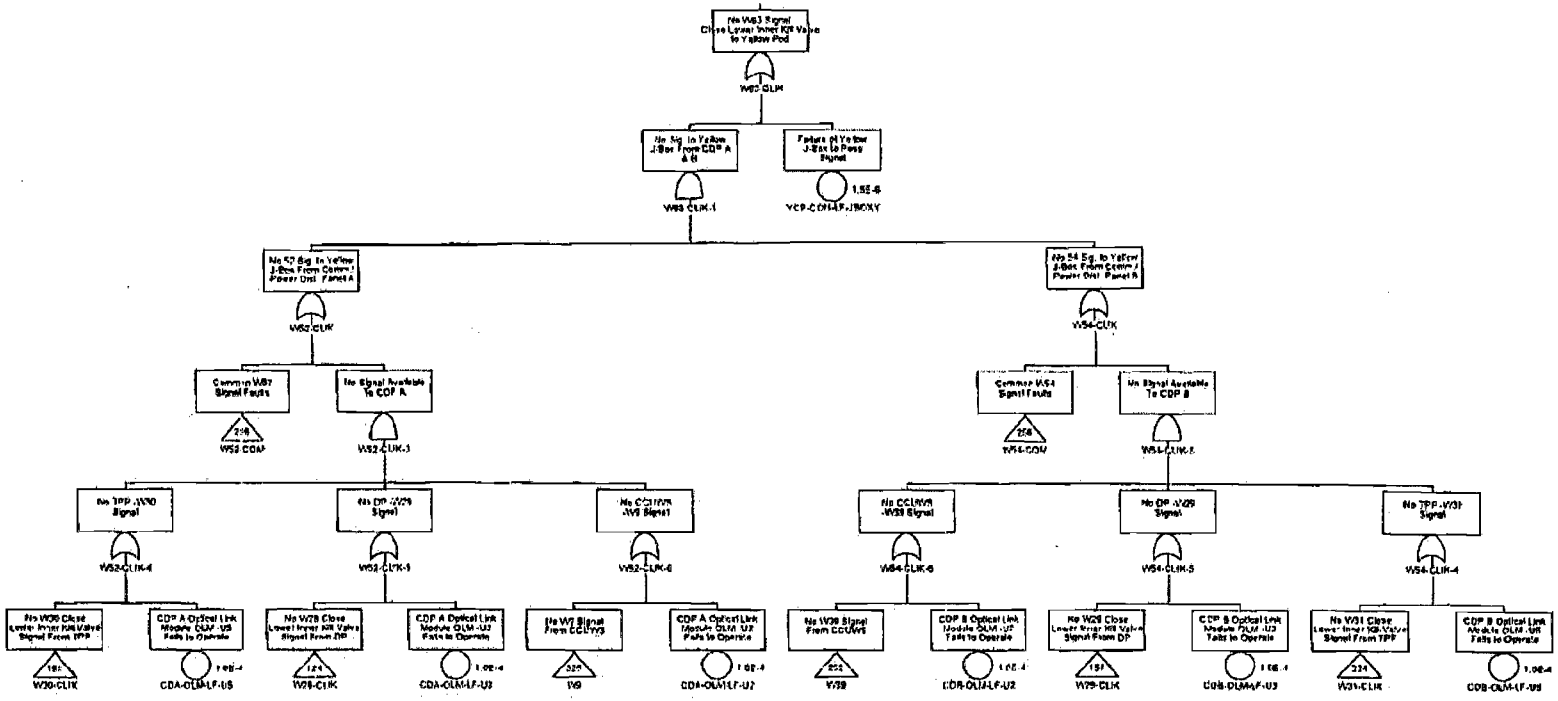

Confidential Treatment Requested by Transocean Holdings LLC

TRN-HCEC-00056746

No W63 Signal Close Lower Outer Choke Valve to Yellow Pod

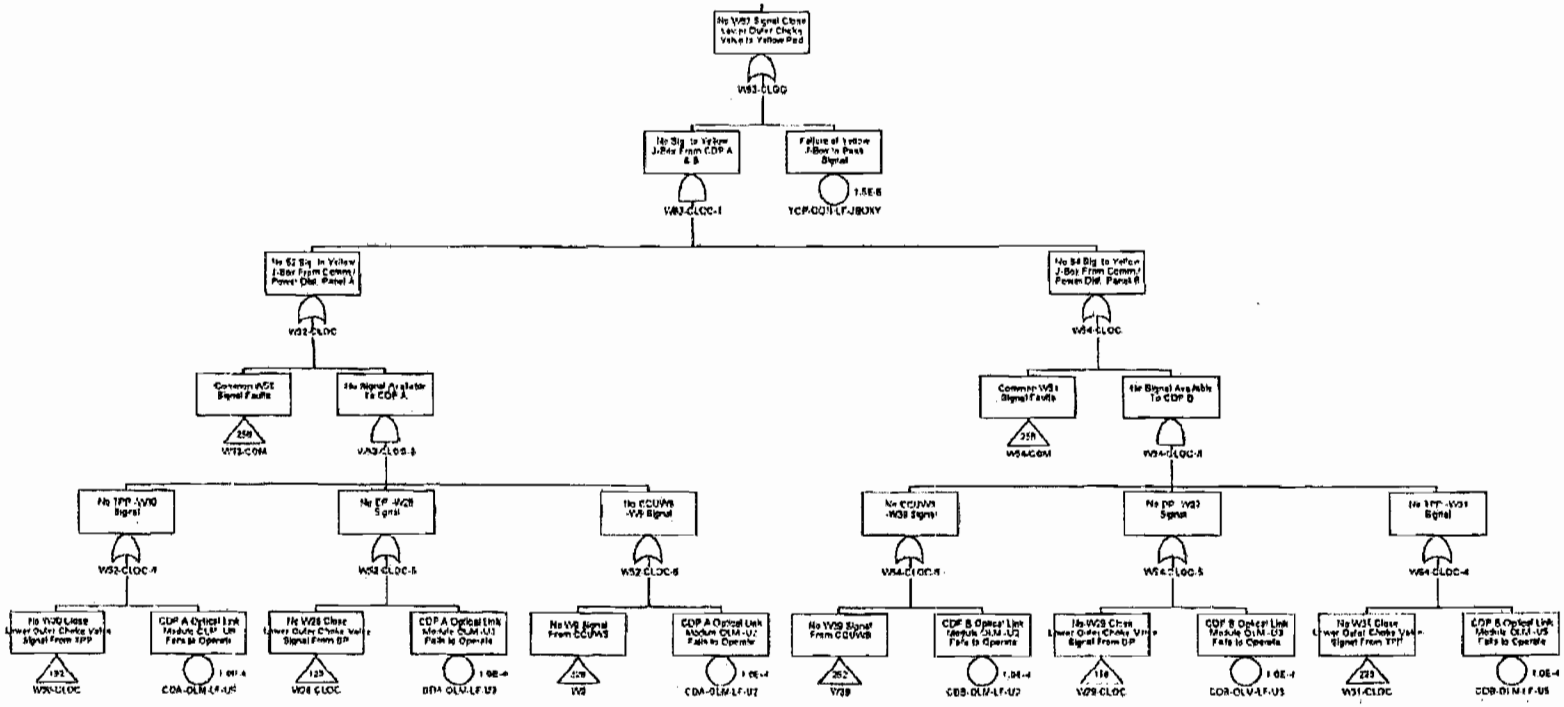

Confidential Treatment Requested by Transocean Holdings LLC

TRN-HCEC-00056747

No W63 Signal Close Lower Outer Kill Valve to Yellow Pod

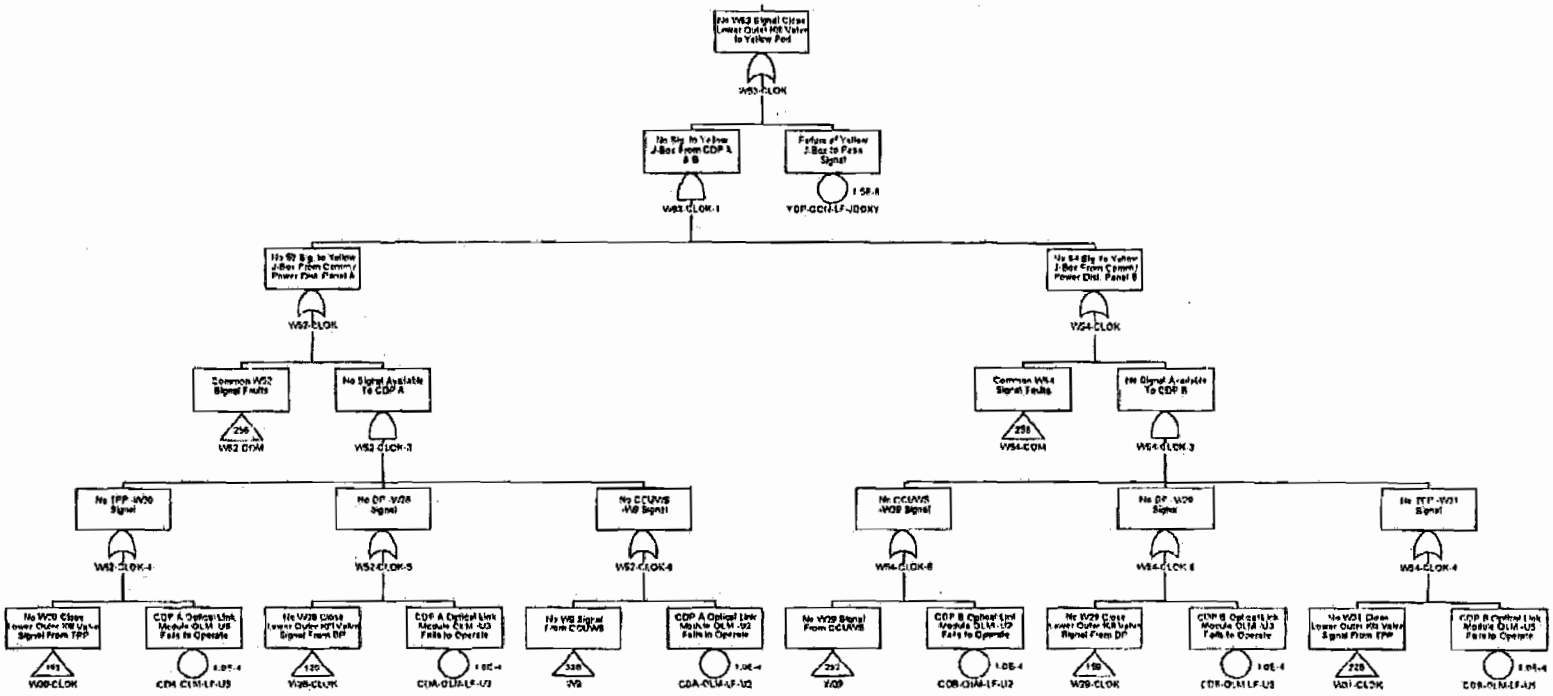

Confidential Treatment Requested by Transocean Holdings LLC

TRN-HCEC-00056748

No W63 Signal Close Casing Shear Ram to Yellow Pod

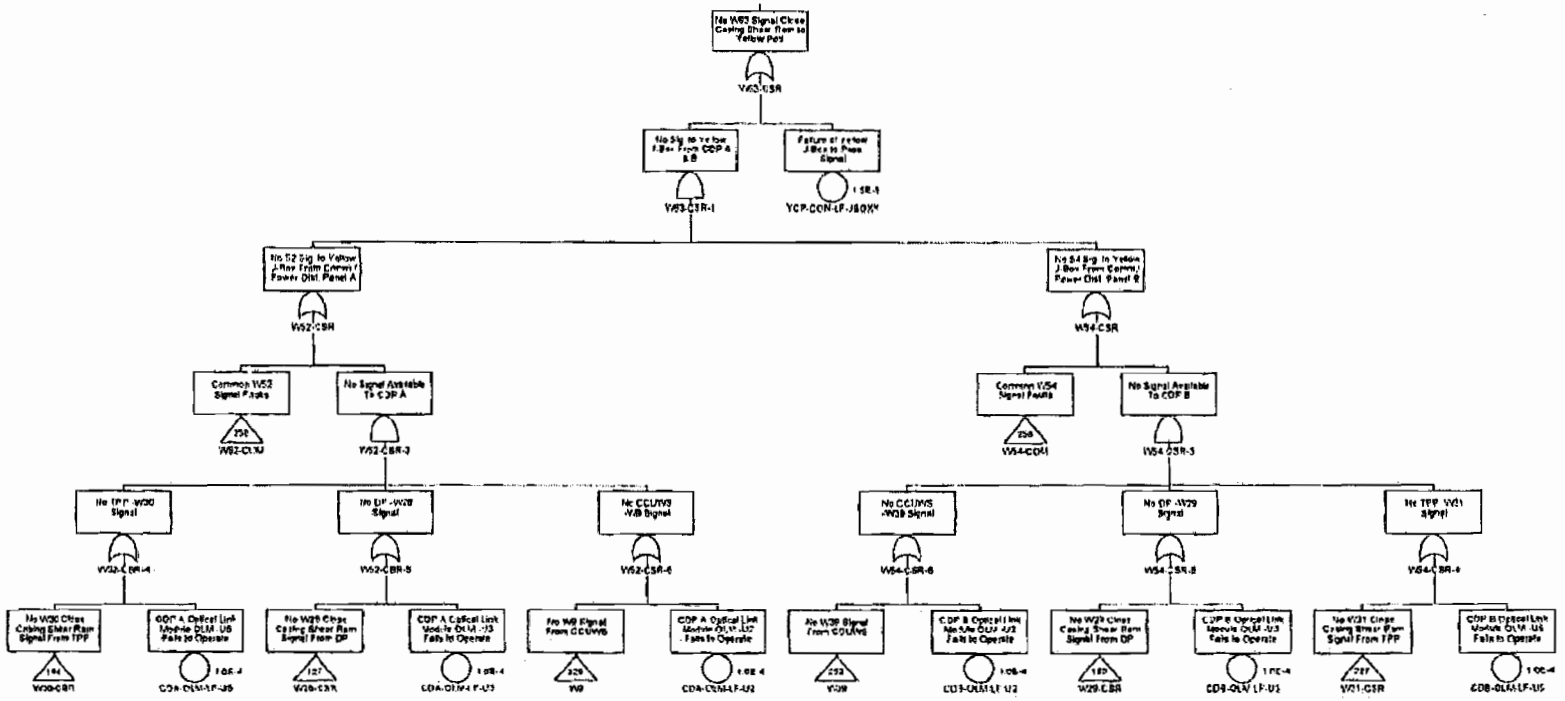

Confidential Treatment Requested by Transocean Holdings LLC

TRN-HCEC-00056749

No W63 Signal Close Upper Inner Choke Valve to Yellow Pod

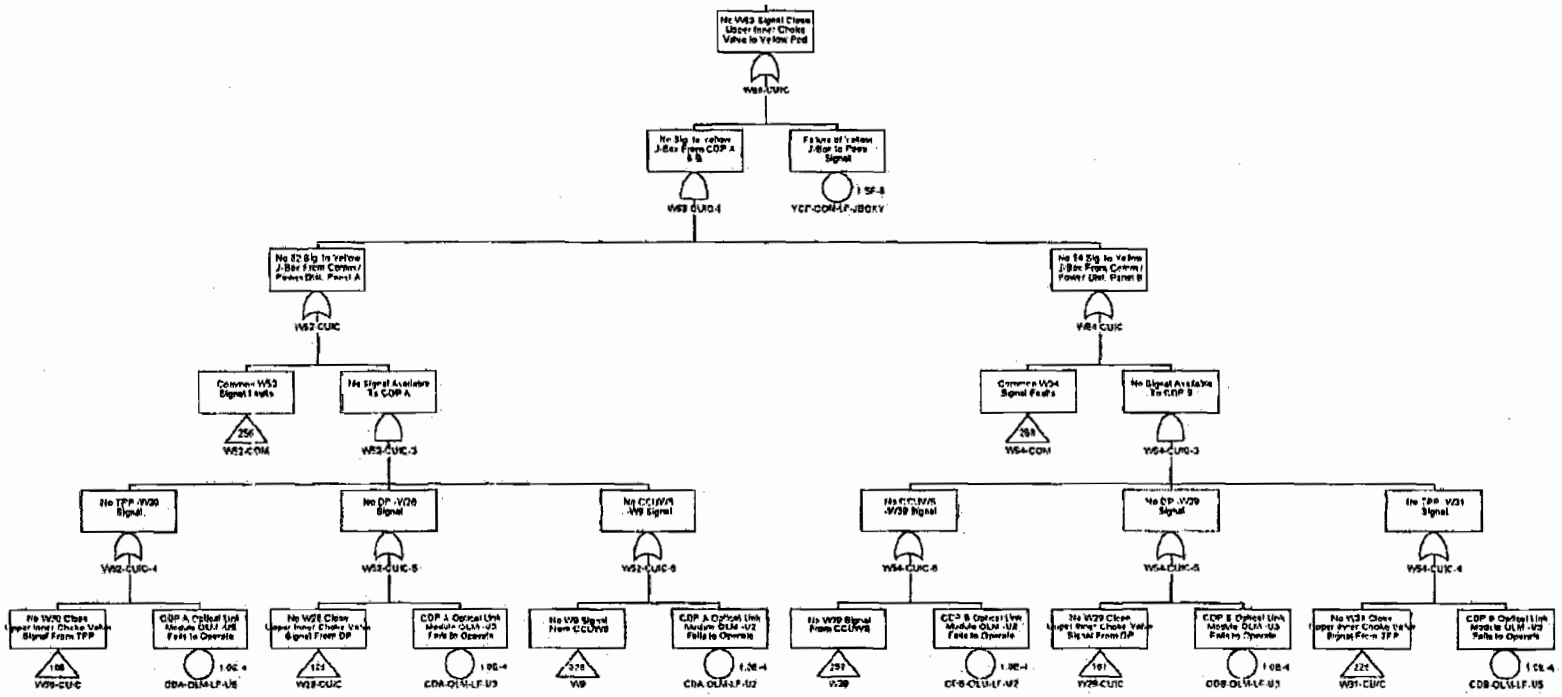

Confidential Treatment Requested by Transocean Holdings LLC

TRN-HCEC-00056750

No W63 Signal Close Upper Inner Kill Valve to Yellow Pod.

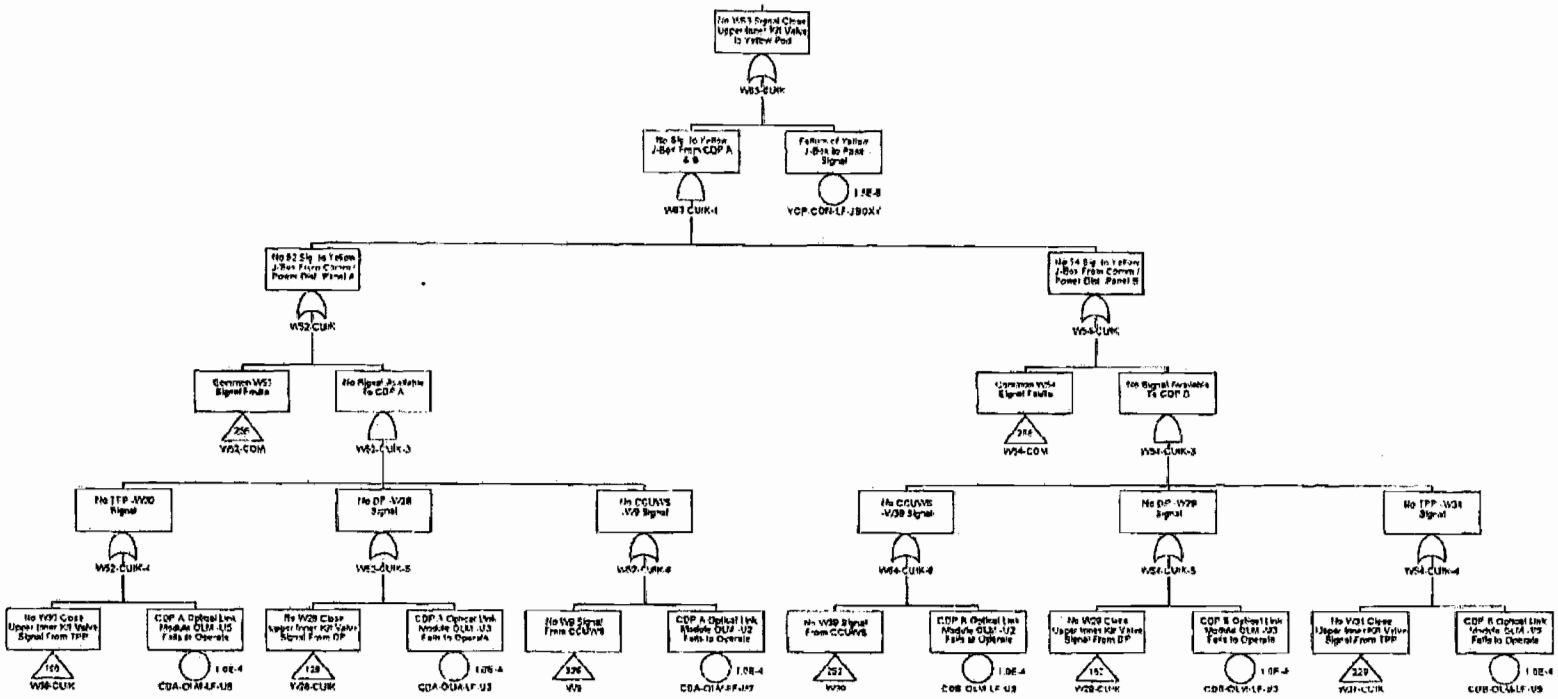

Confidential Treatment Requested by Transocean Holdings LLC

TRN-HCEC-00056751

No W63 Signal Close Upper Outer Choke Valve to Yellow Pod

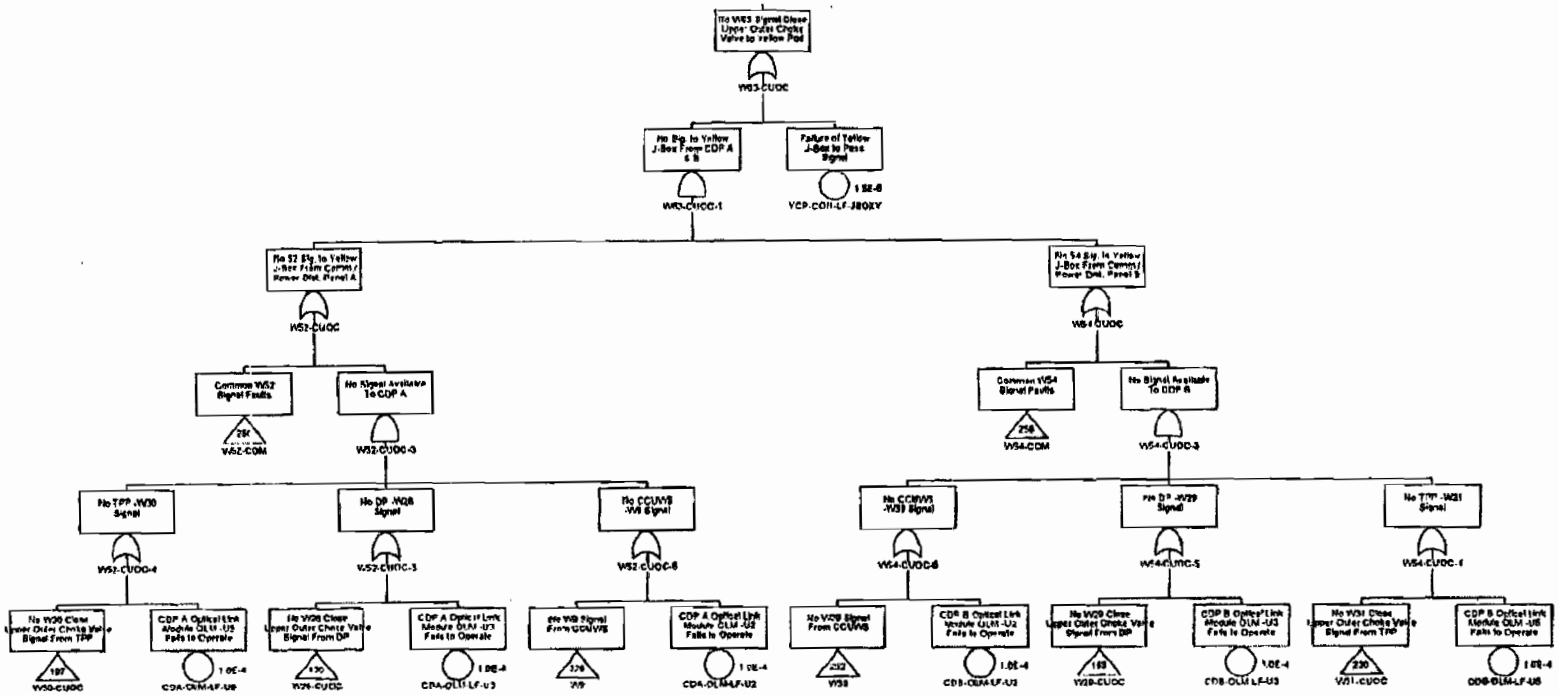

Confidential Treatment Requested by Transocean Holdings LLC

TRN-HCEC-00056752

No W63 Signal Close Upper Outer Kill Valve to Yellow Pod

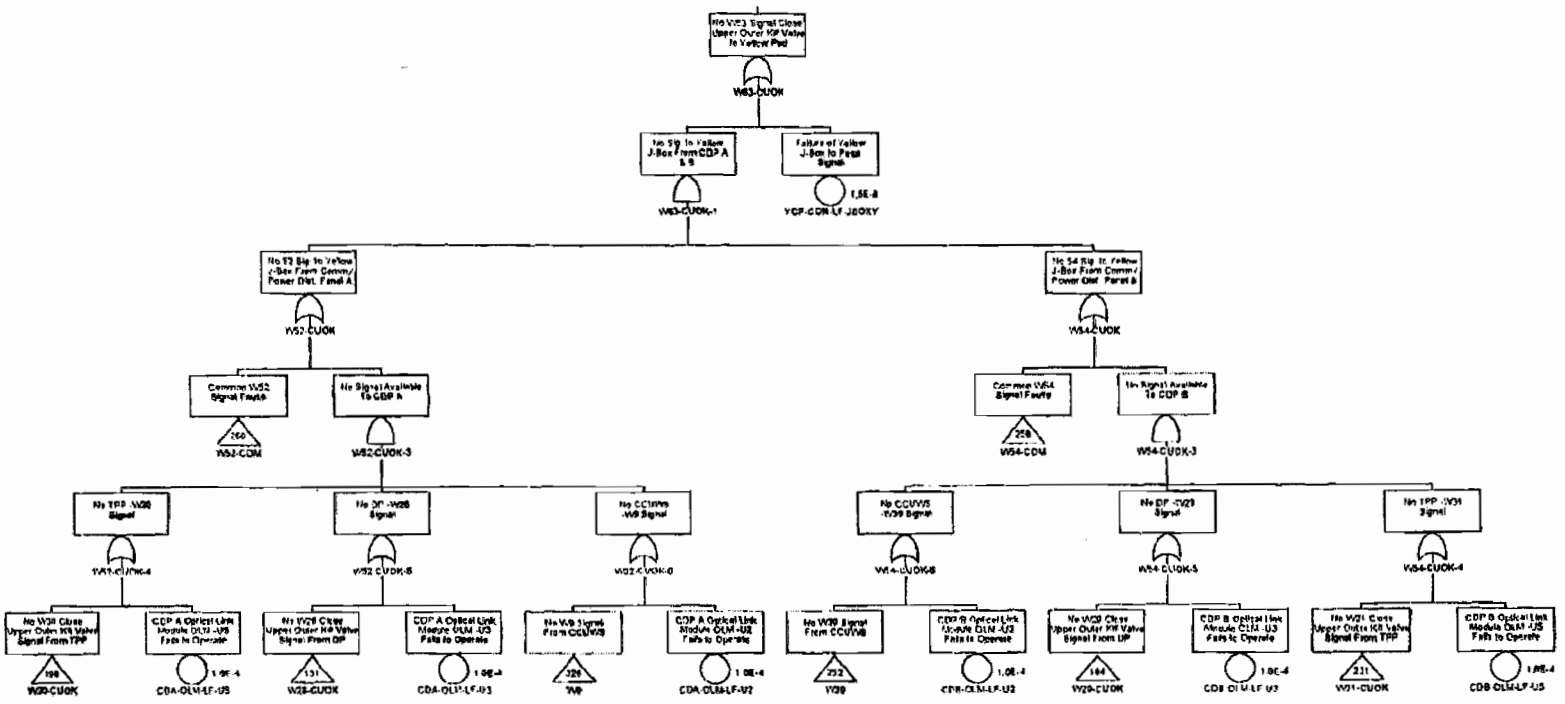

Confidential Treatment Requested by Transocean Holdings LLC

TRN-HCEC-00056753

No W63 Signal Close Lower Annular to Yellow Pod

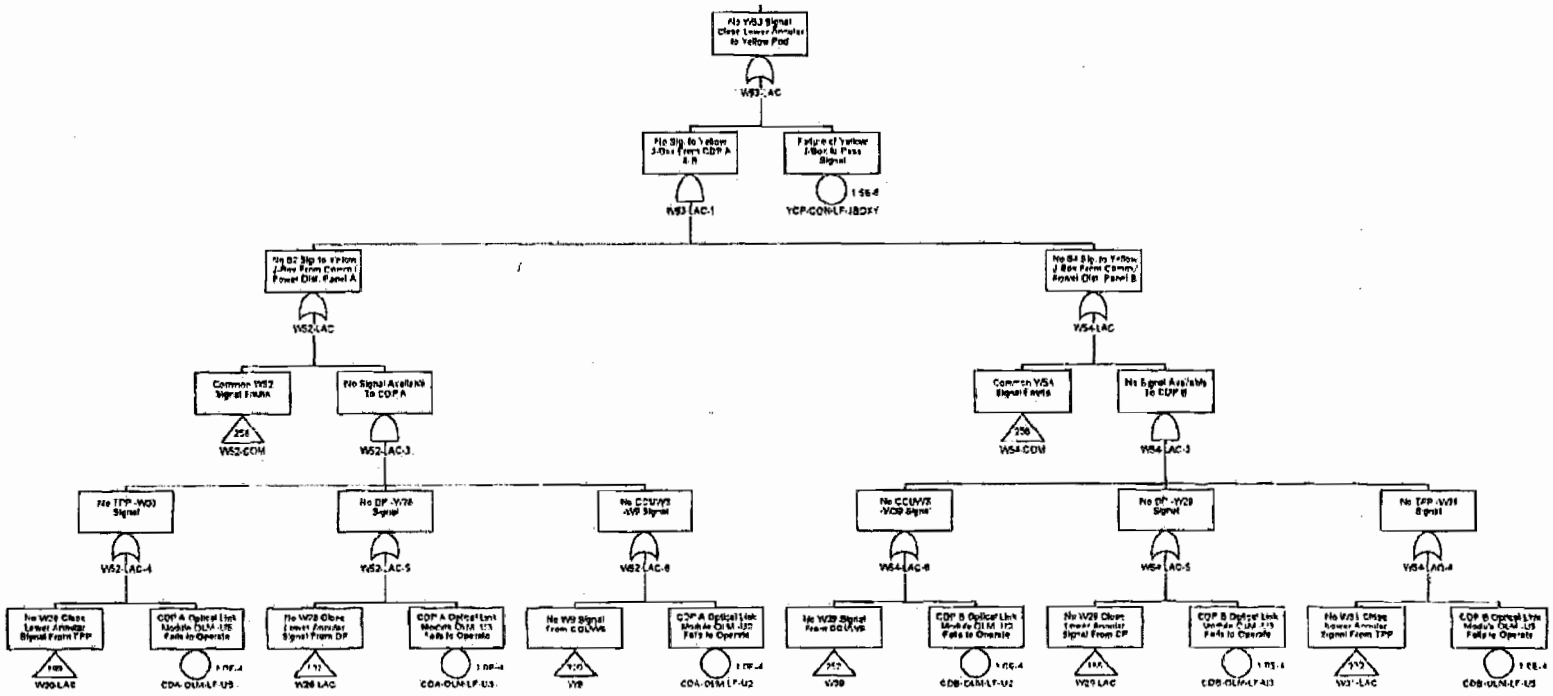

Confidential Treatment Requested by Transocean Holdings LLC

TRN-HCEC-00056754

No W63 Signal Close Lower Pipe Ram to Yellow Pod

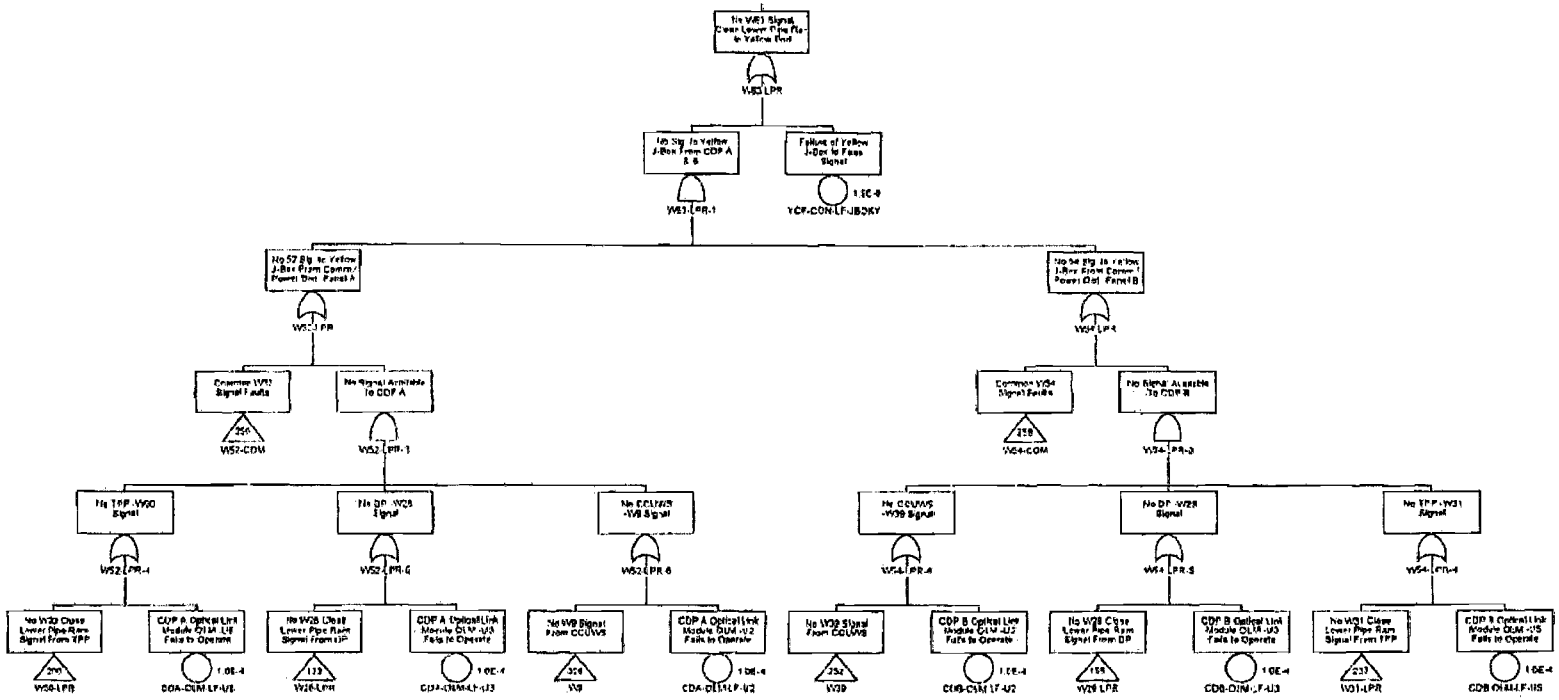

Confidential Treatment Requested by Transocean Holdings LLC

TRN-HCEC-00056755

No W63 Signal Close Middle Pipe Ram to Yellow Pod

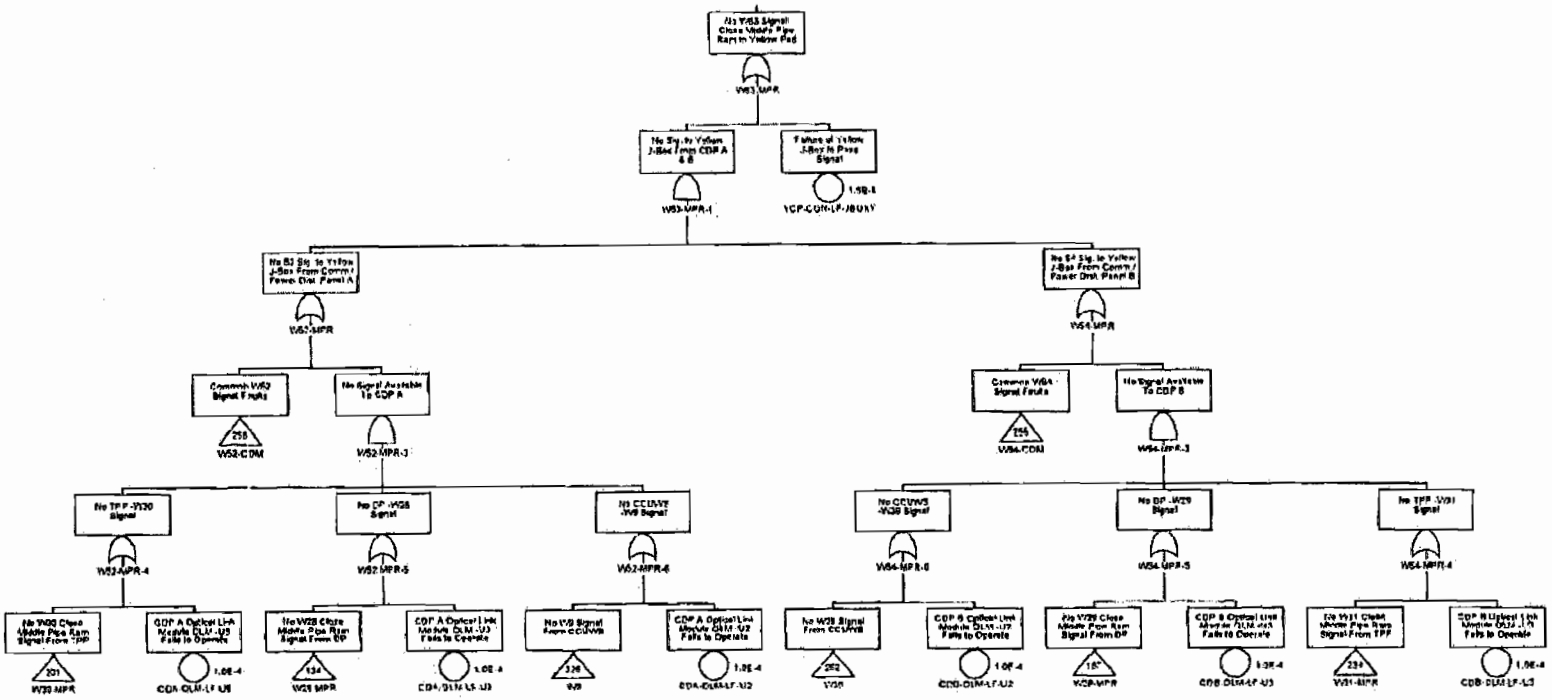

Confidential Treatment Requested by Transocean Holdings LLC

TRN-HCEC-00056756

No W63 Signal Open Lower Inner Choke Valve to Yellow Pod

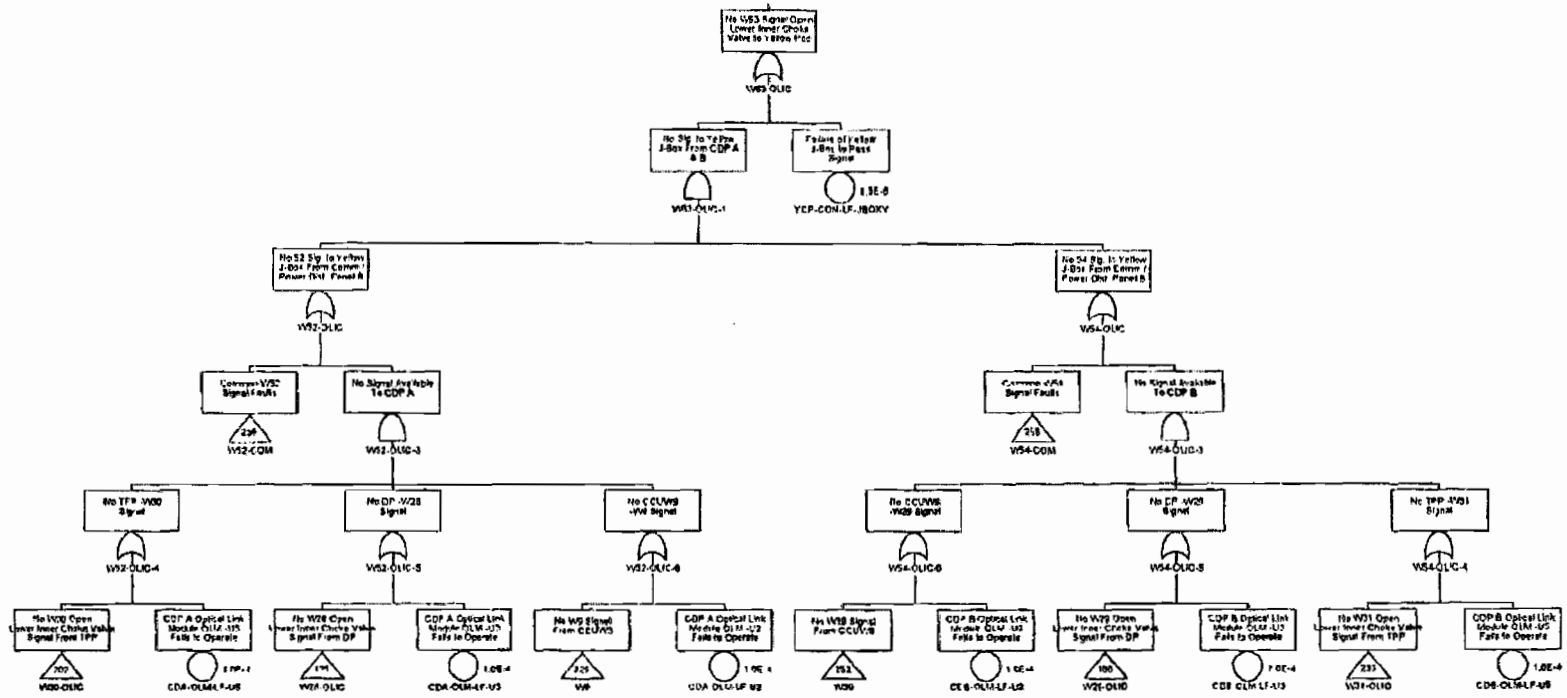

Confidential Treatment Requested by Transocean Holdings LLC

TRN-HCEC-00056757

No W63 Signal Open Lower Inner Kill Valve to Yellow Pod

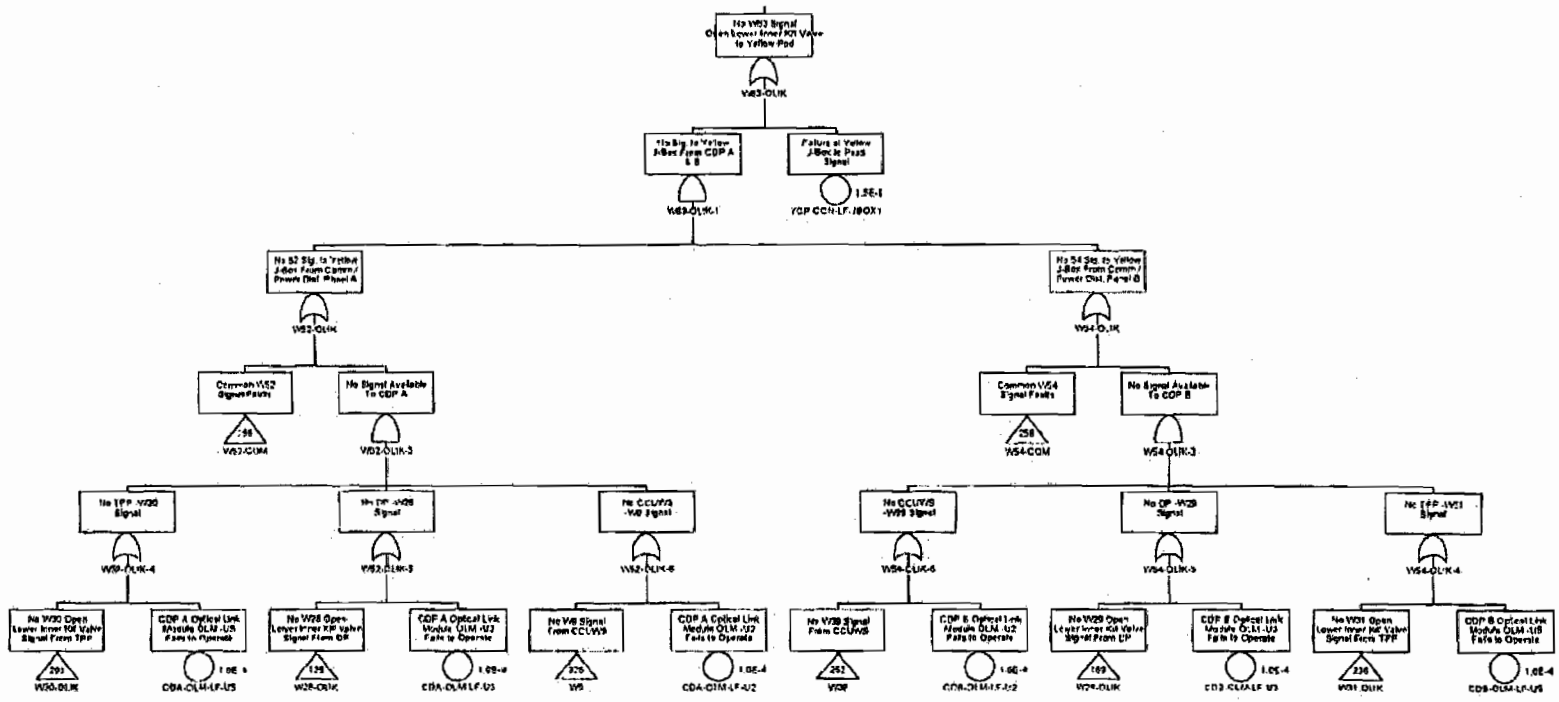

Confidential Treatment Requested by Transocean Holdings LLC

TRN-HCEC-00056758

No W63 Signal Open Lower Outer Choke Valve to Yellow Pod

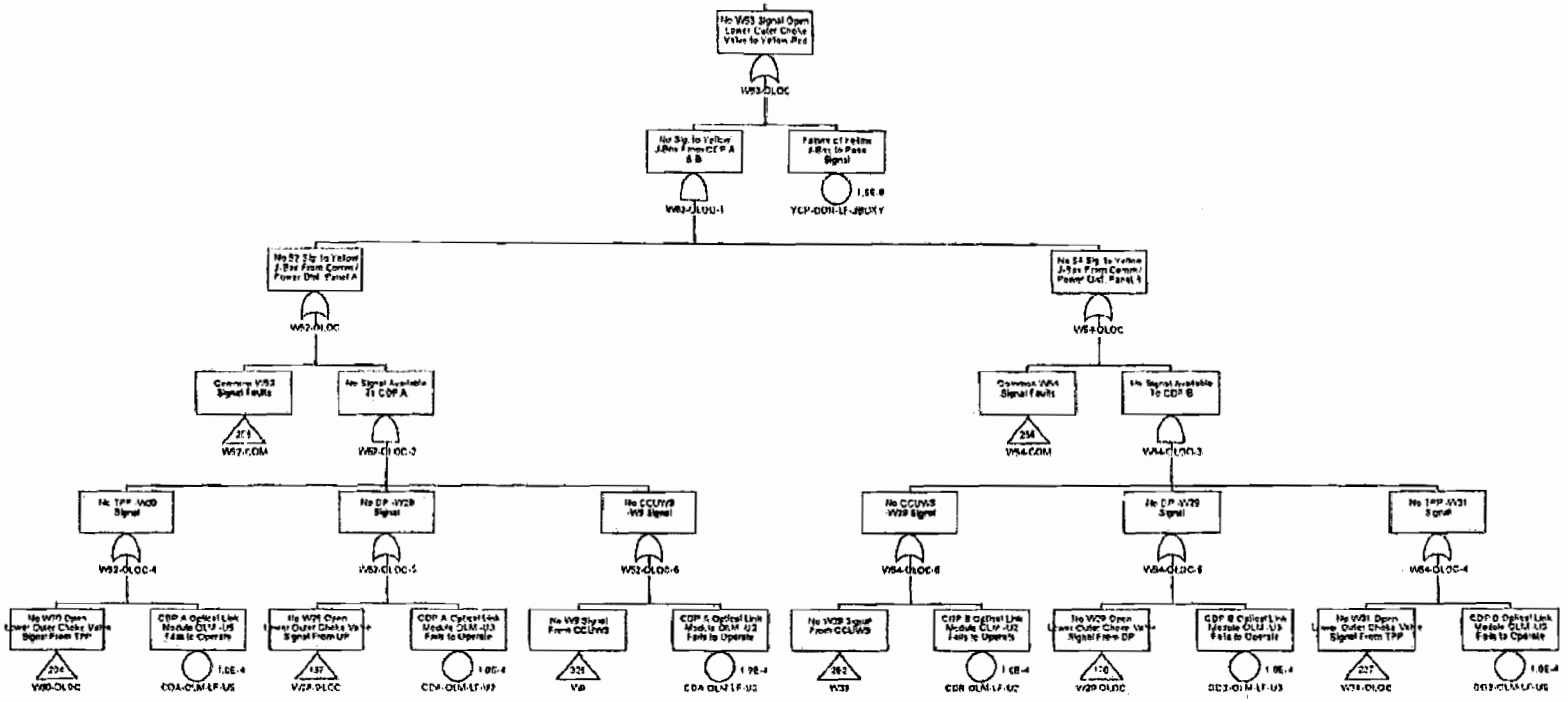

Confidential Treatment Requested by Transocean Holdings LLC

TRN-HCEC-00056759

No W63 Signal Open Lower Outer Kill Valve to Yellow Pod

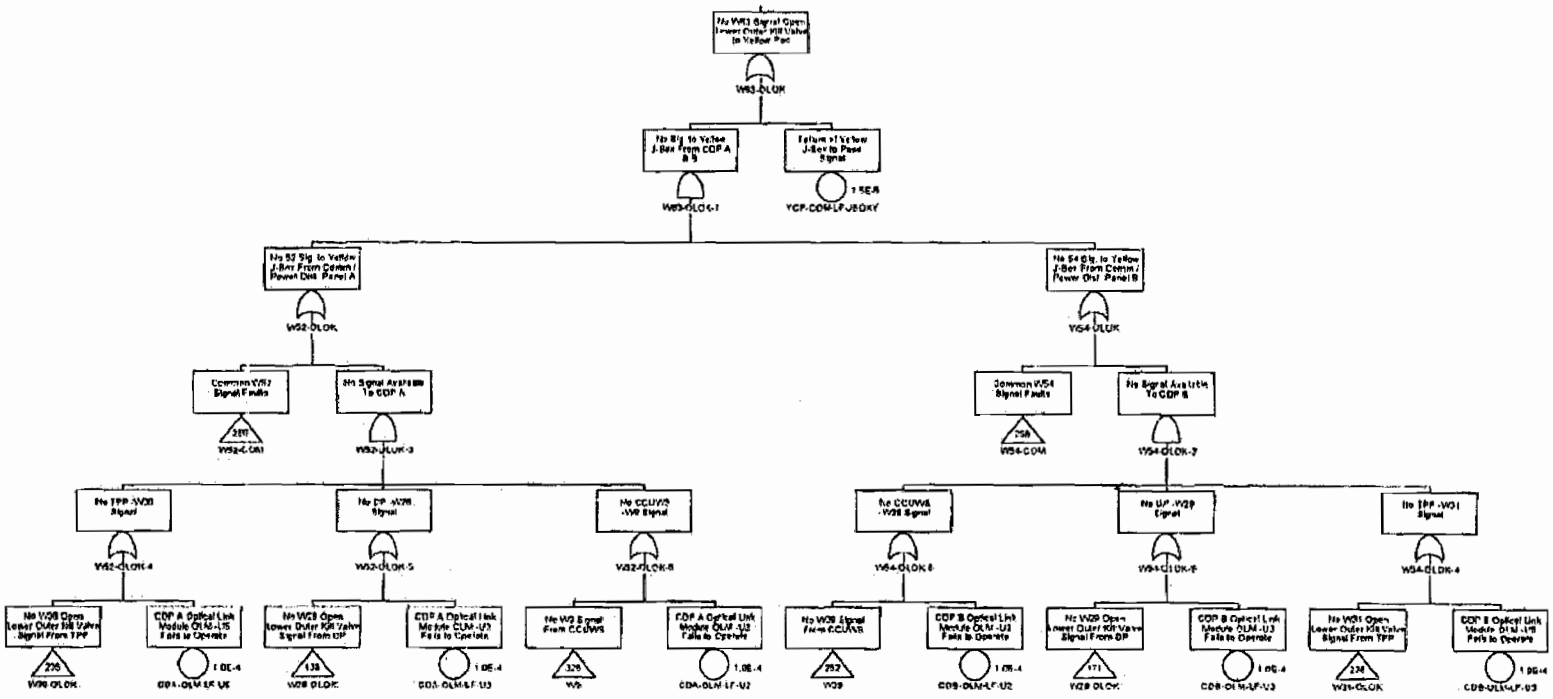

Confidential Treatment Requested by Transocean Holdings LLC

TRN-HCEC-00056760

No W63 Signal Open Upper Inner Choke Valve to Yellow Pod

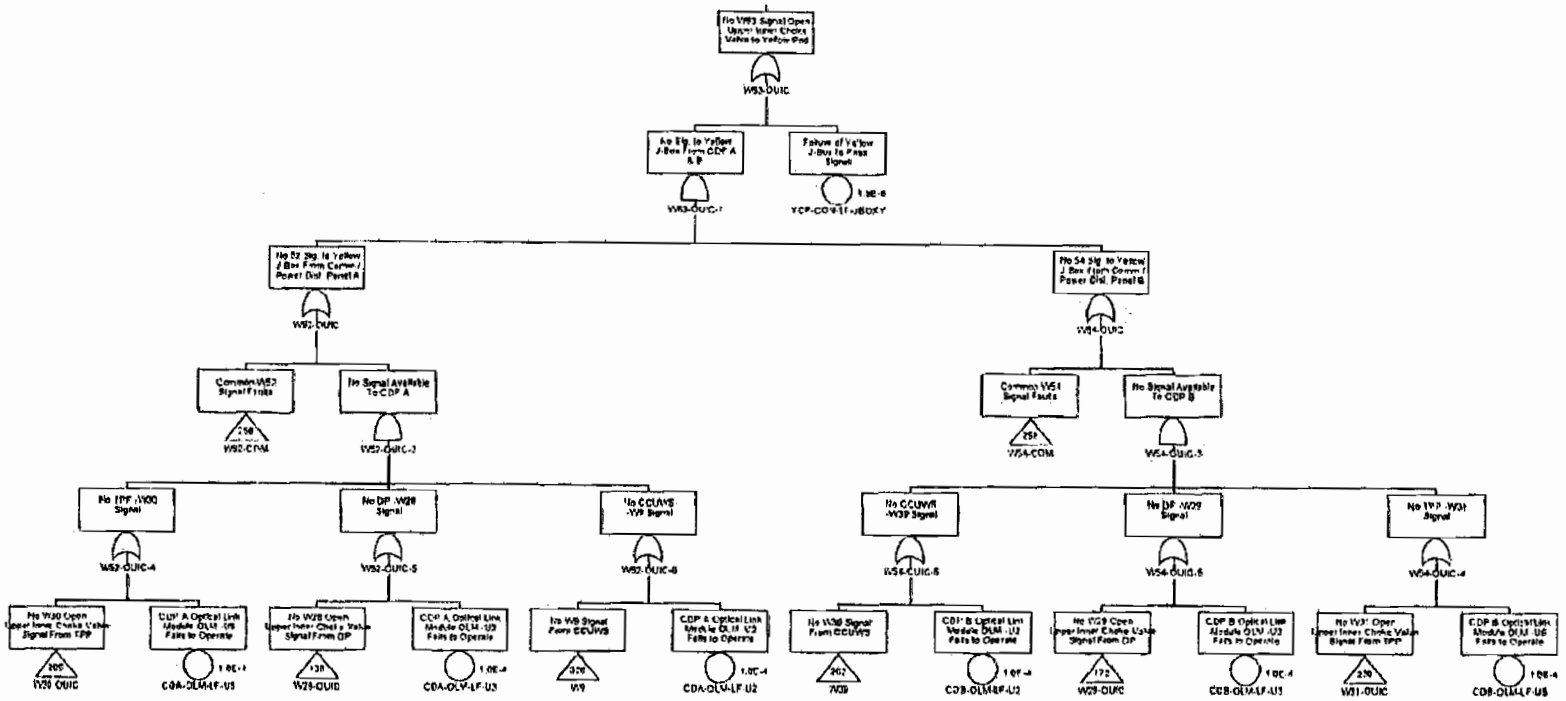

Confidential Treatment Requested by Transocean Holdings LLC

TRN-HCEC-00056761

No W63 Signal Open Upper Inner Kill Valve to Yellow Pod

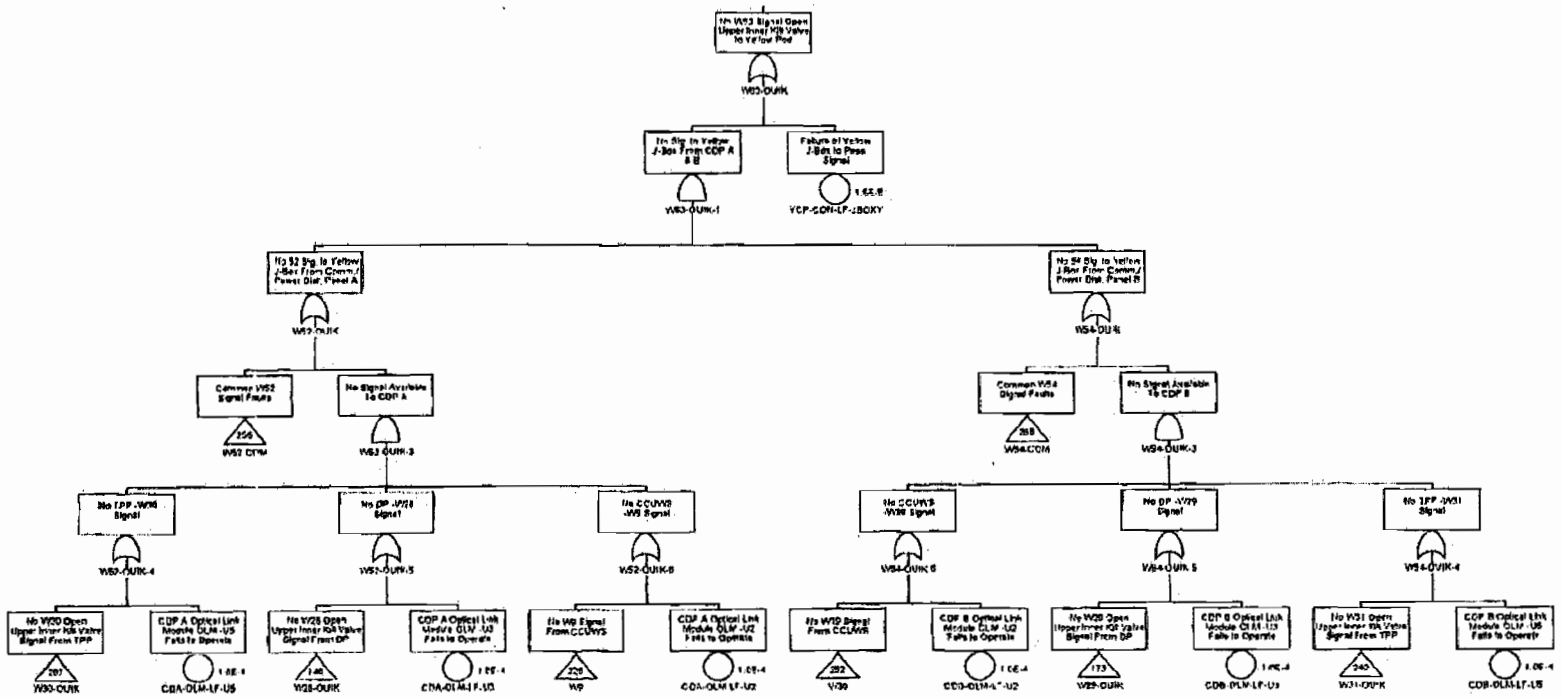

Confidential Treatment Requested by Transocean Holdings LLC

TRN-HCEC-00056762

No W63 Signal Open Upper Outer Choke Valve to Yellow Pod

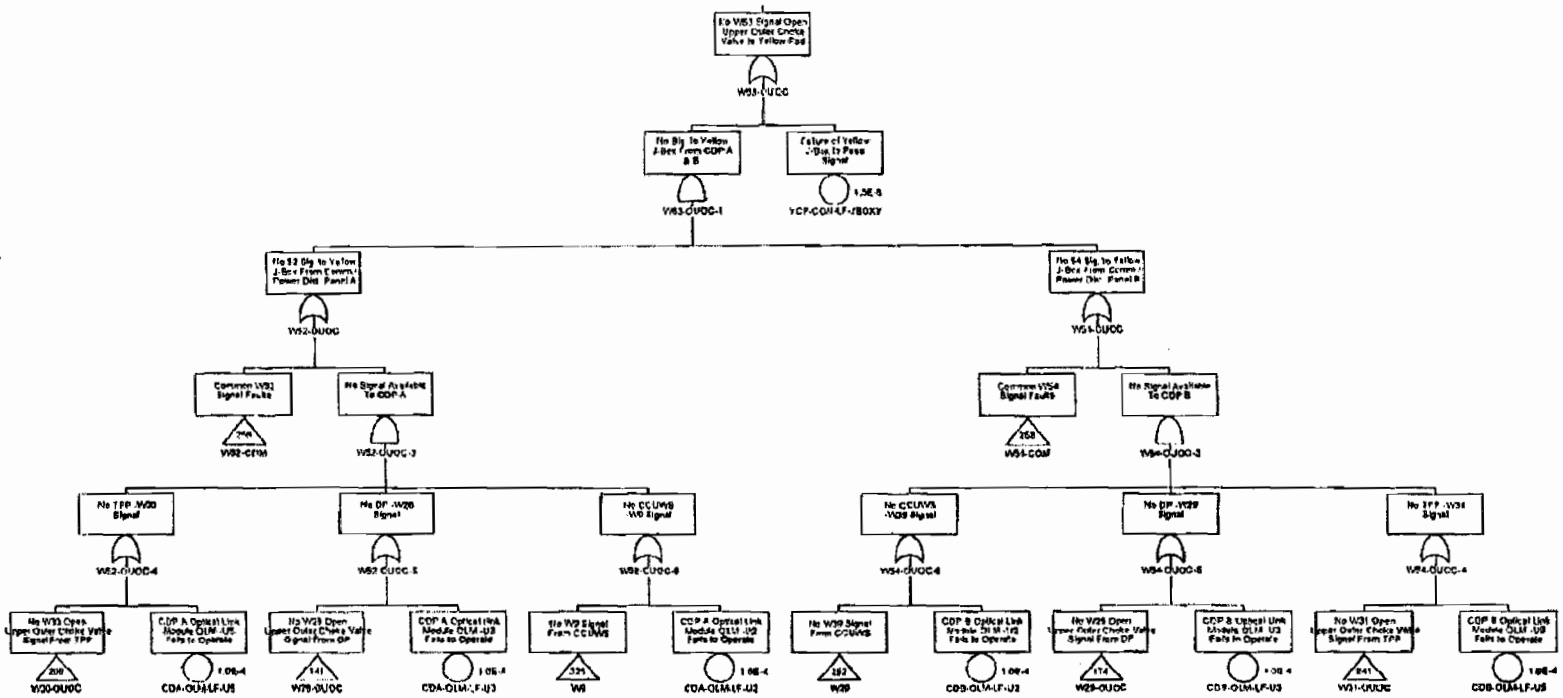

Confidential Treatment Requested by Transocean Holdings LLC

TRN-HCEC-00056763

No W63 Signal Open Upper Outer Kill Valve to Yellow Pod

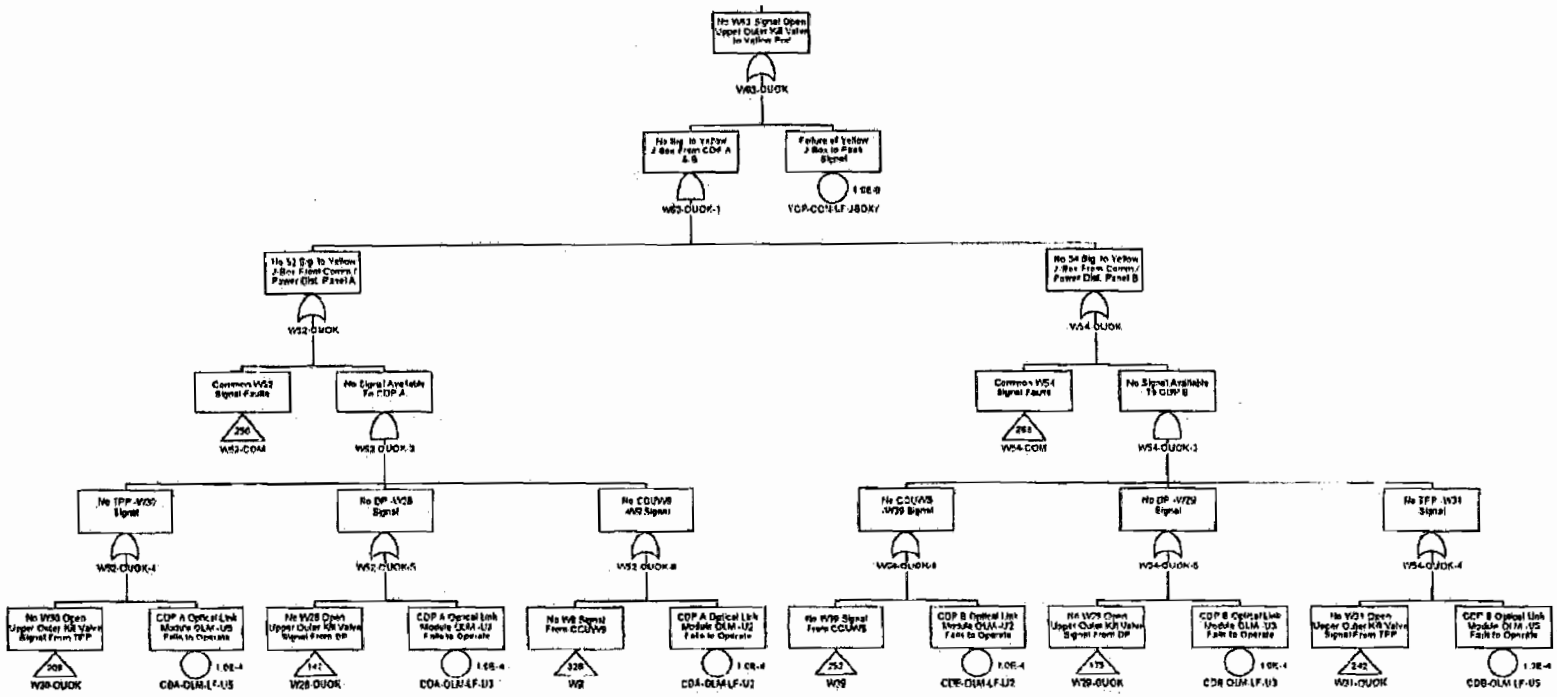

Confidential Treatment Requested by Transocean Holdings LLC

TRN-HCEC-00056764

No W63 Signal Unlatch Prl. Disconn. to Yellow Pod

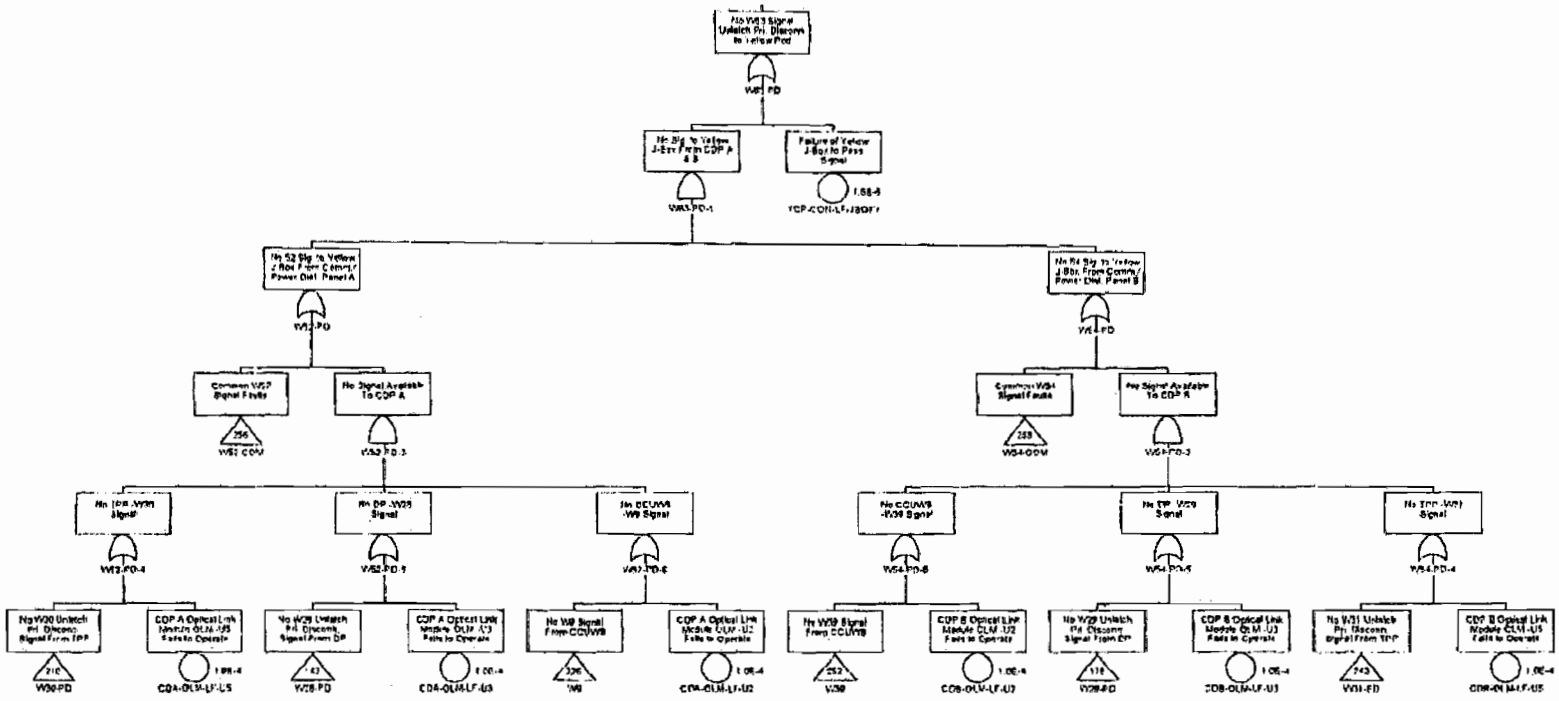

Confidential Treatment Requested by Transocean Holdings LLC

TRN-HCEC-00056765

No W63 Signal Open Pod Select to Yellow Pod

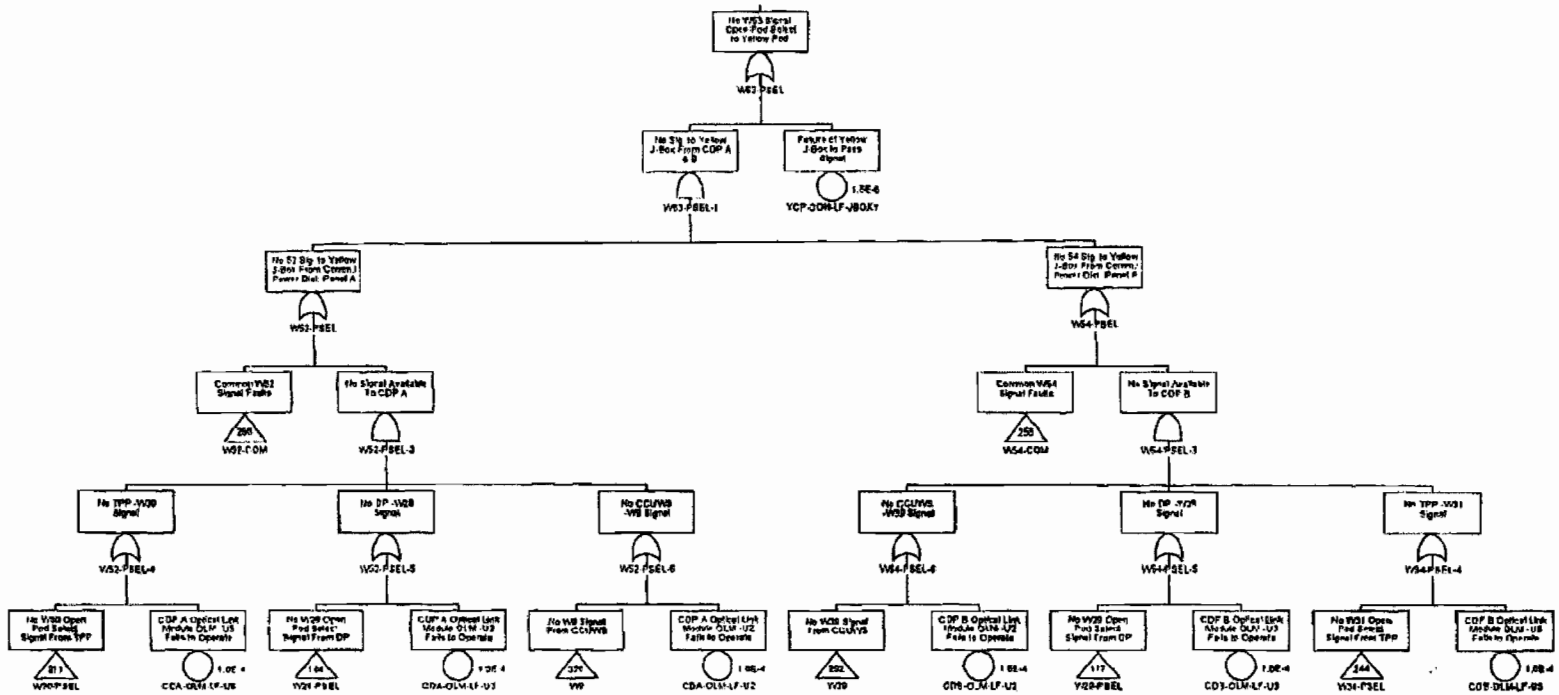

Confidential Treatment Requested by Transocean Holdings LLC

TRN-HCEC-00056766

No W63 Signal Unlatch Sec. Disconn. to Yellow Pod

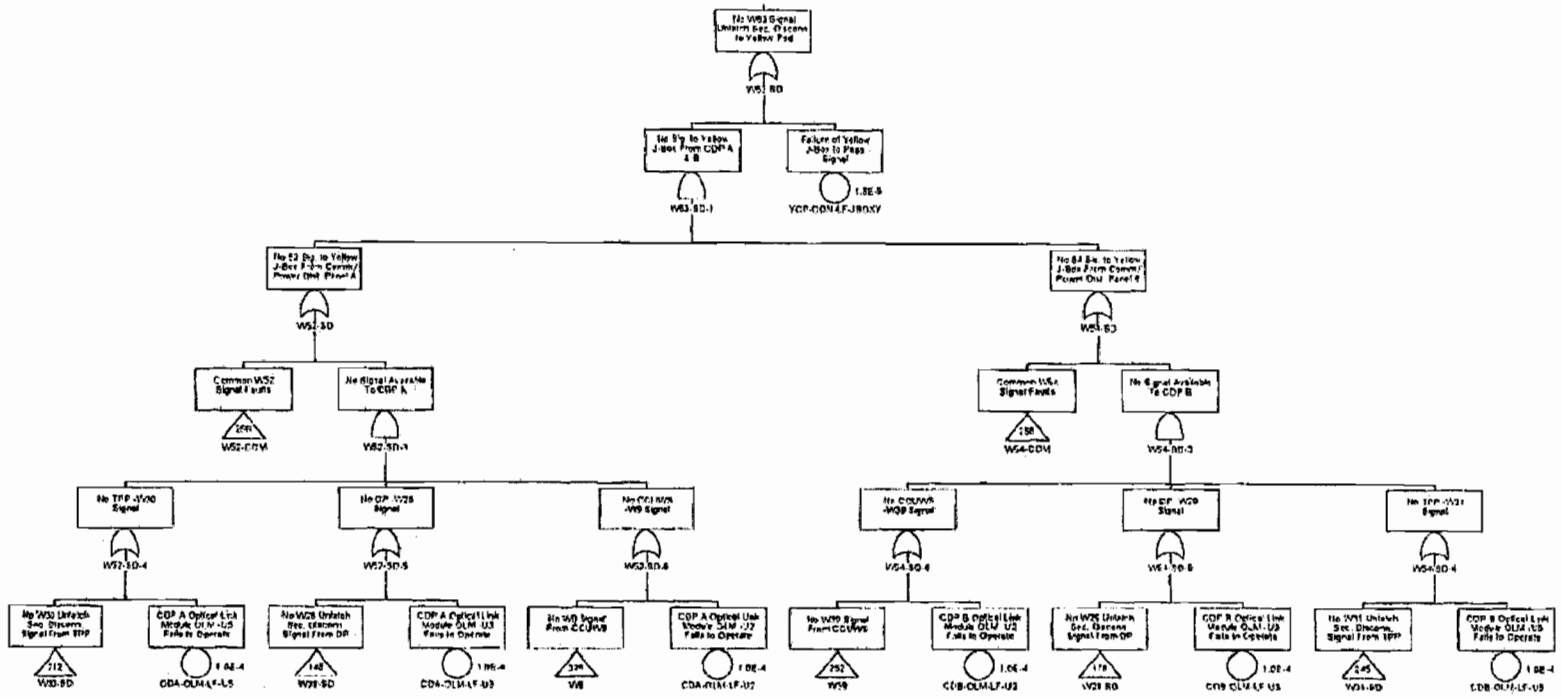

Confidential Treatment Requested by Transocean Holdings LLC

TRN-HCEC-00056767

No W63 Signal Close Upper Annular to Yellow Pod

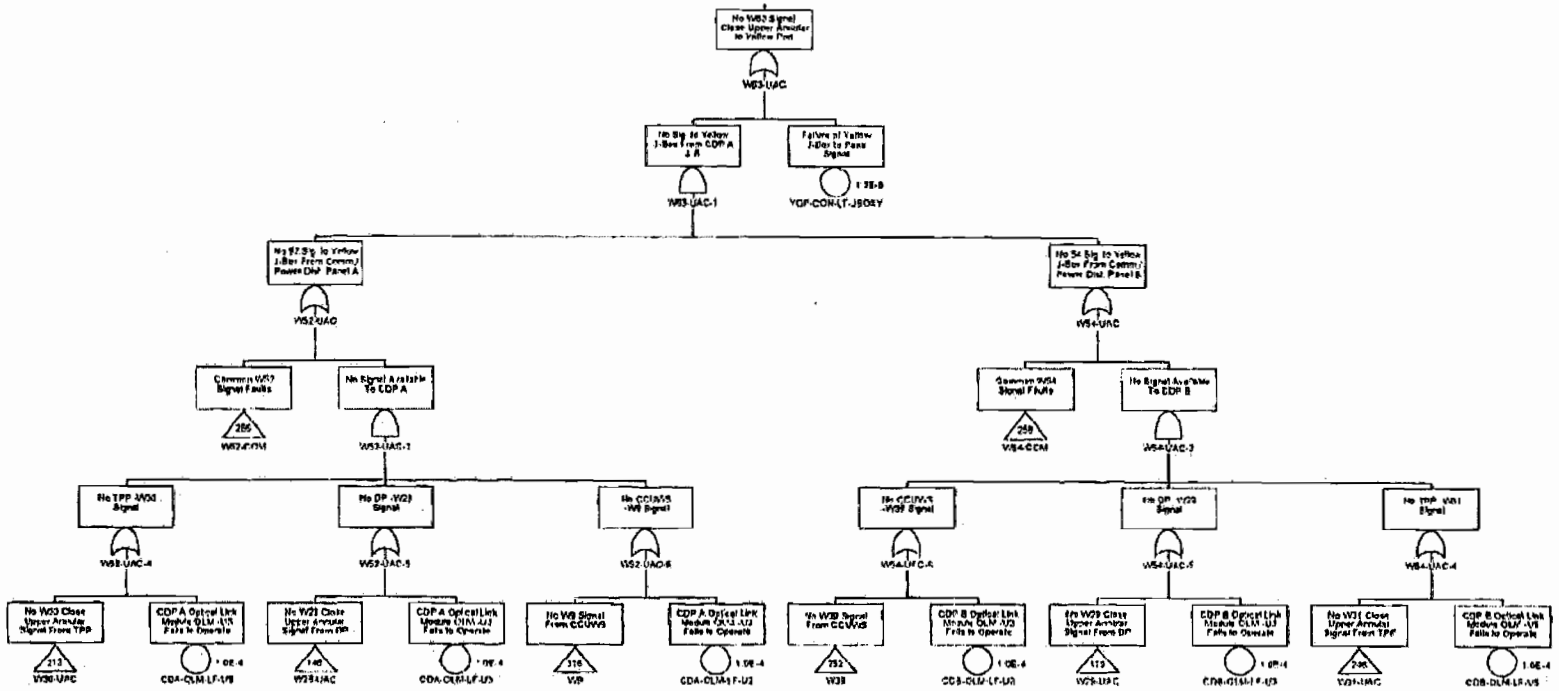

Confidential Treatment Requested by Transocean Holdings LLC

TRN-HCEC-00056768

No W63 Signal Close HP Blind Shear to Yellow Pod

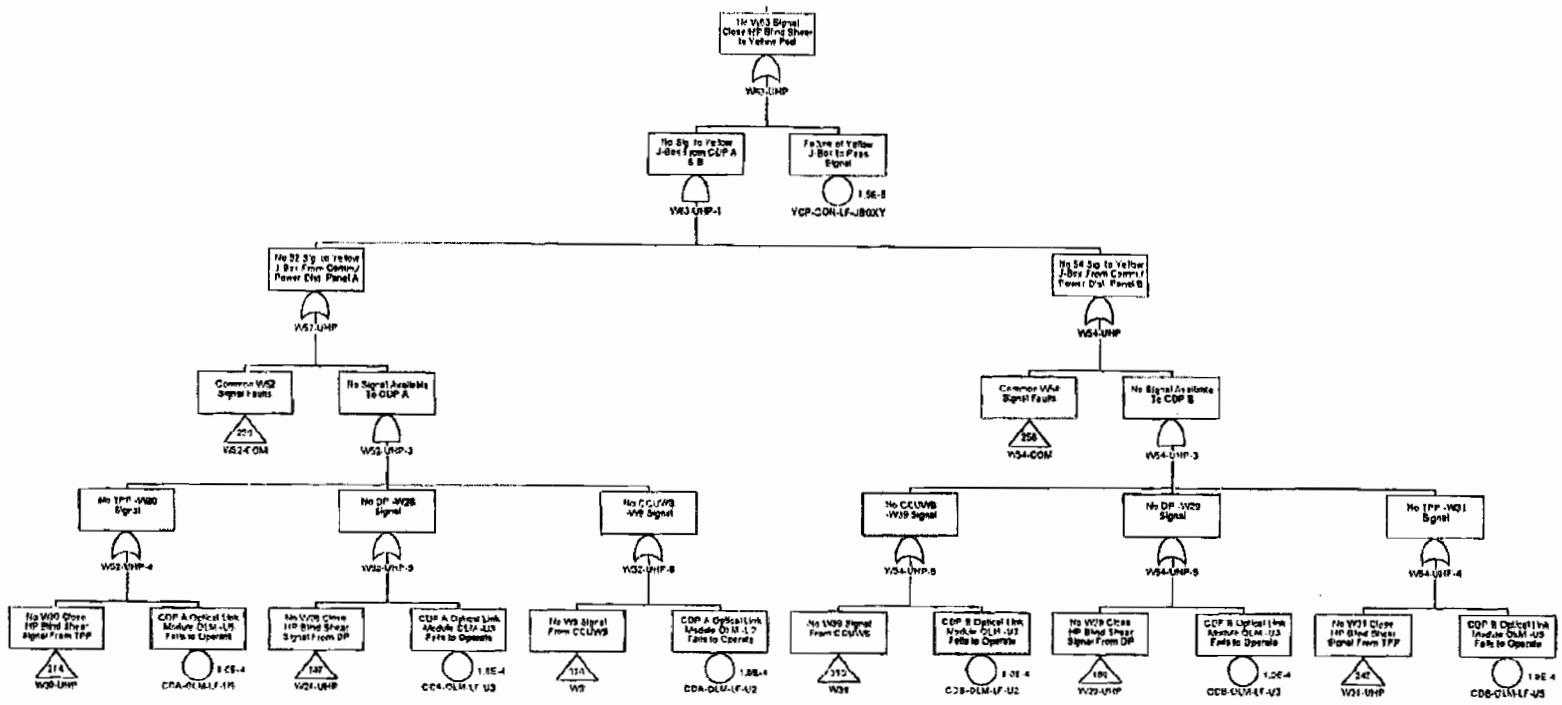

Confidential Treatment Requested by Transocean Holdings LLC

TRN-HCEC-00056769

No W63 Signal Close Upper Pipe Ram to Yellow Pod

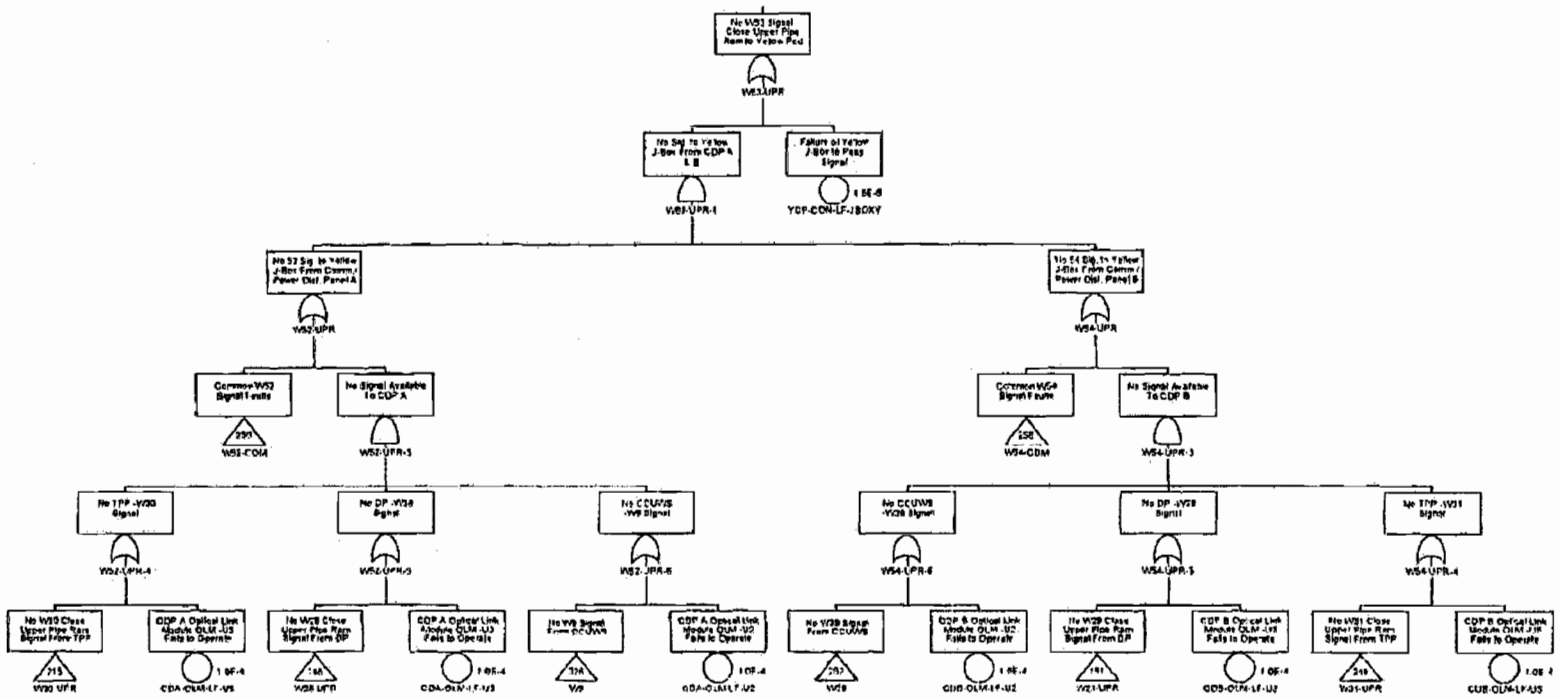

Confidential Treatment Requested by Transocean Holdings LLC

TRN-HCEC-00056770

No W63 Signal Close Blind Shear Ram to Yellow Pod

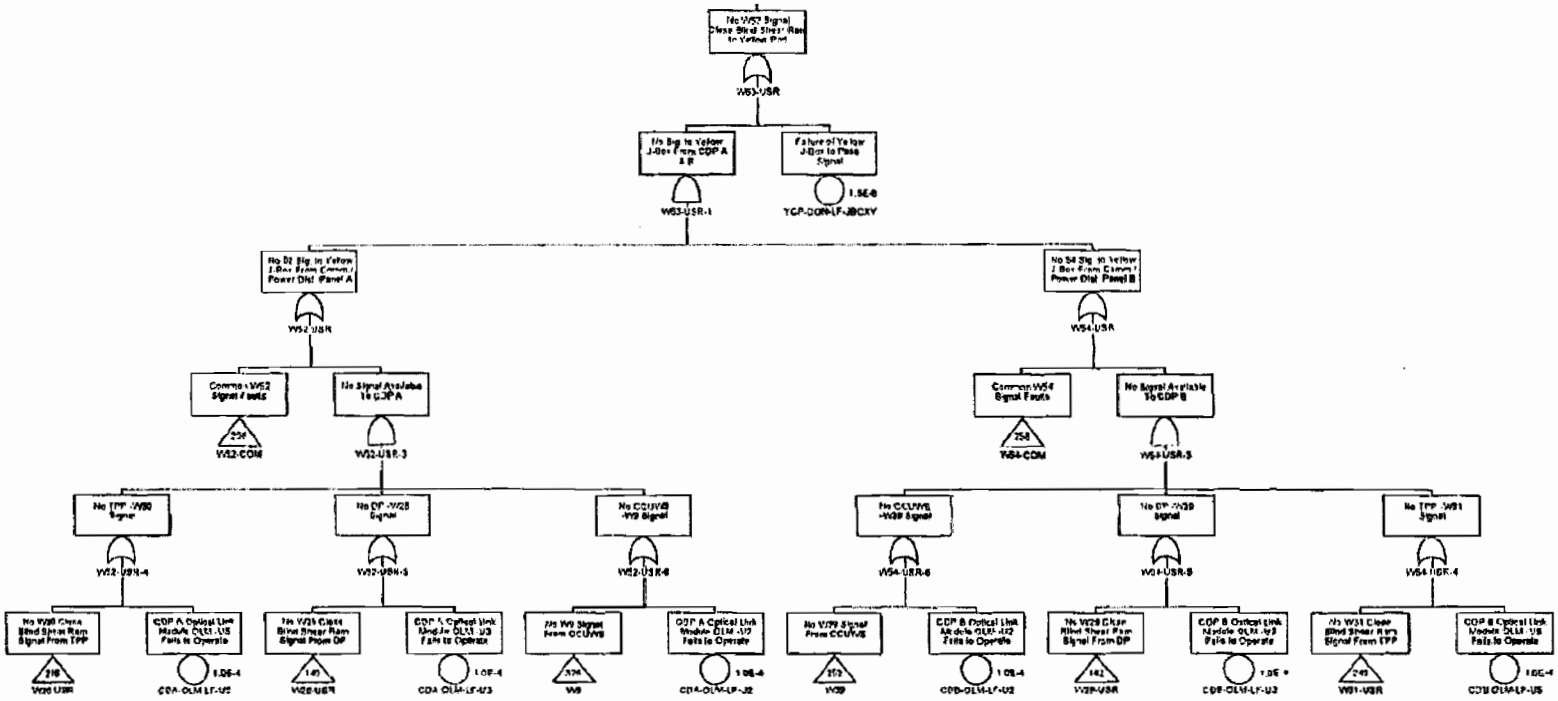

Confidential Treatment Requested by Transocean Holdings LLC

TRN-HCEC-00056771

No W63 Signal Open Yel. Conduit Supply to Yellow Pod

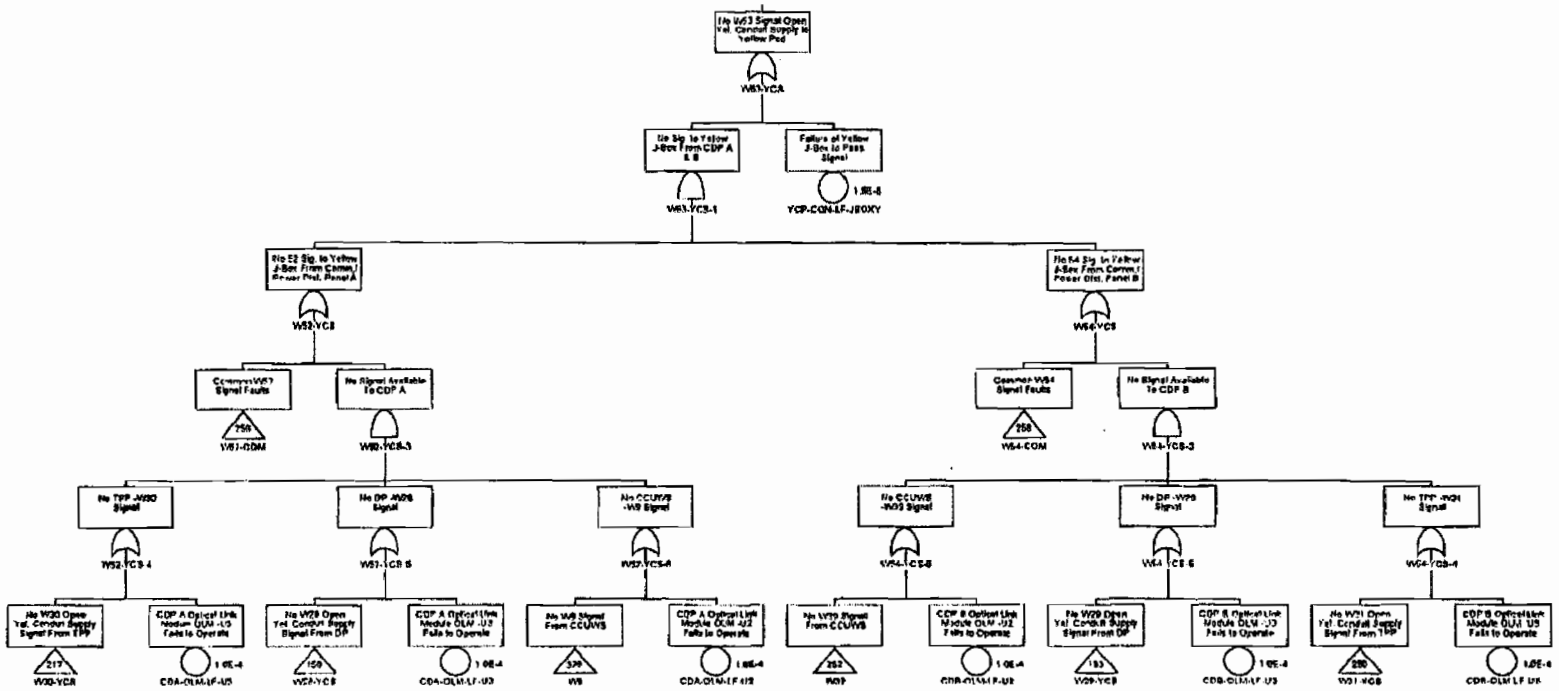

Confidential Treatment Requested by Transocean Holdings LLC

TRN-HCEC-00056772

No W63 Signal Open Yel. HL Supply to Yellow Pod

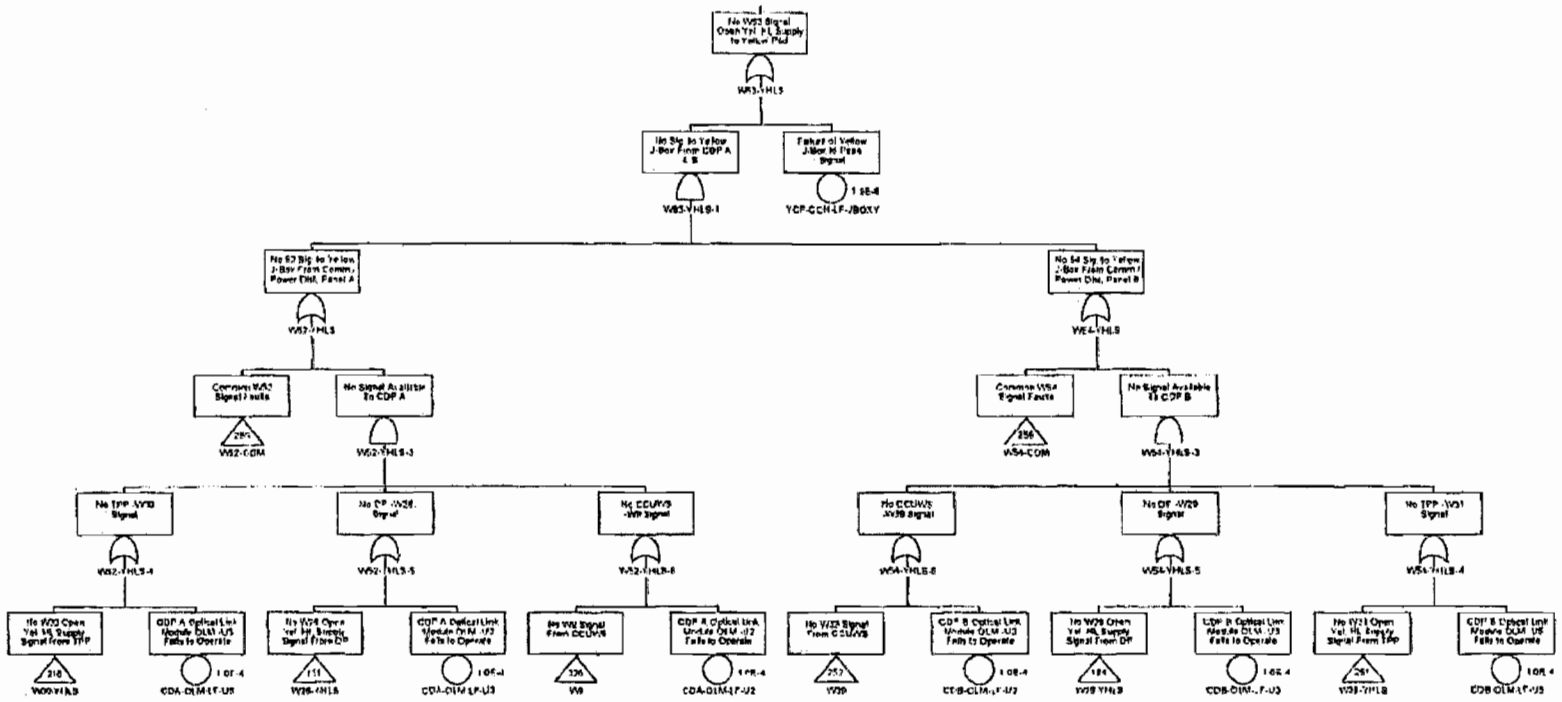

Confidential Treatment Requested by Transocean Holdings LLC

TRN-HCEC-00056773

No W9 Signal From CCU Workstation

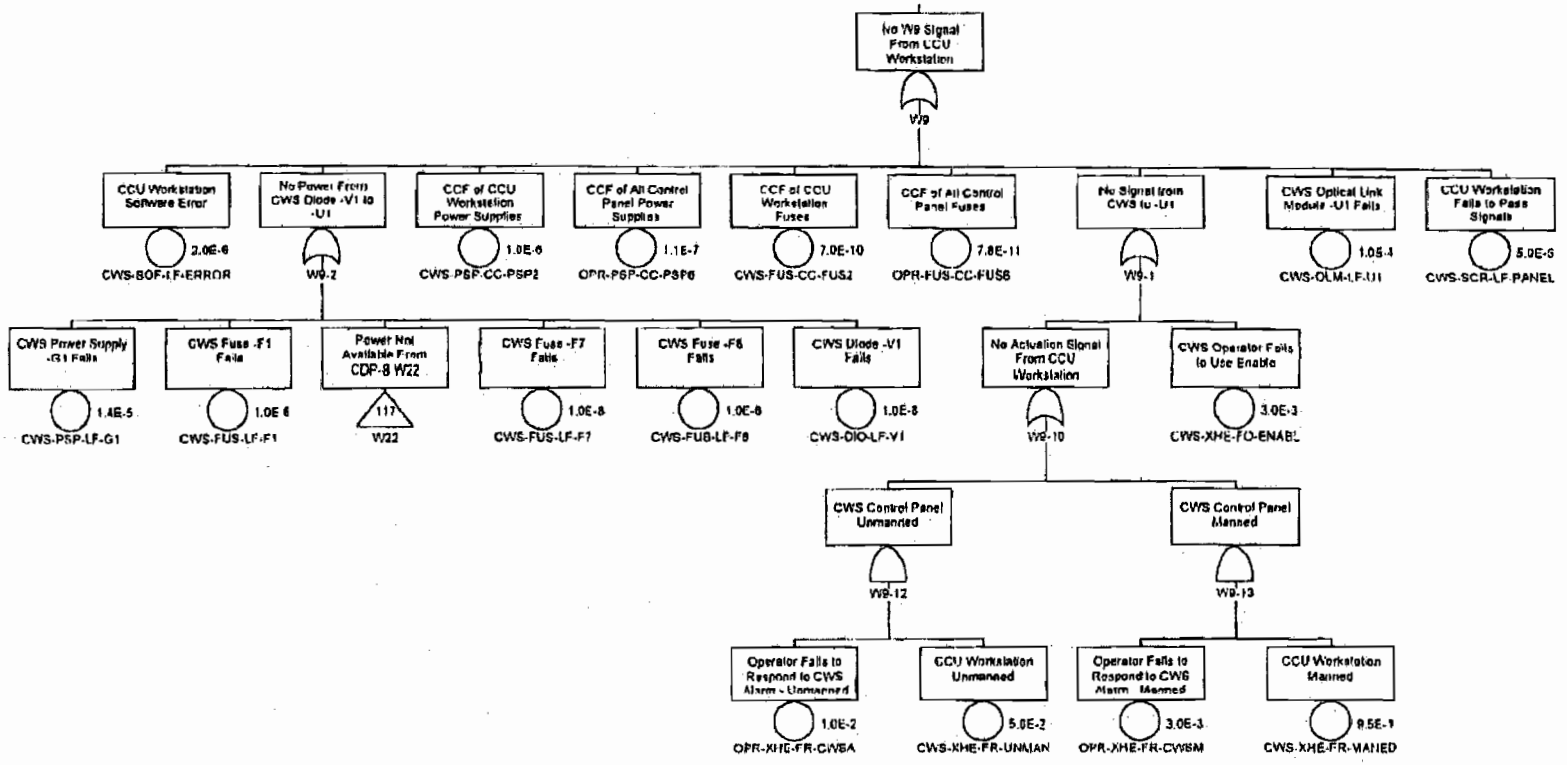

Confidential Treatment Requested by Transocean Holdings LLC

TRN-HCEC-00056774

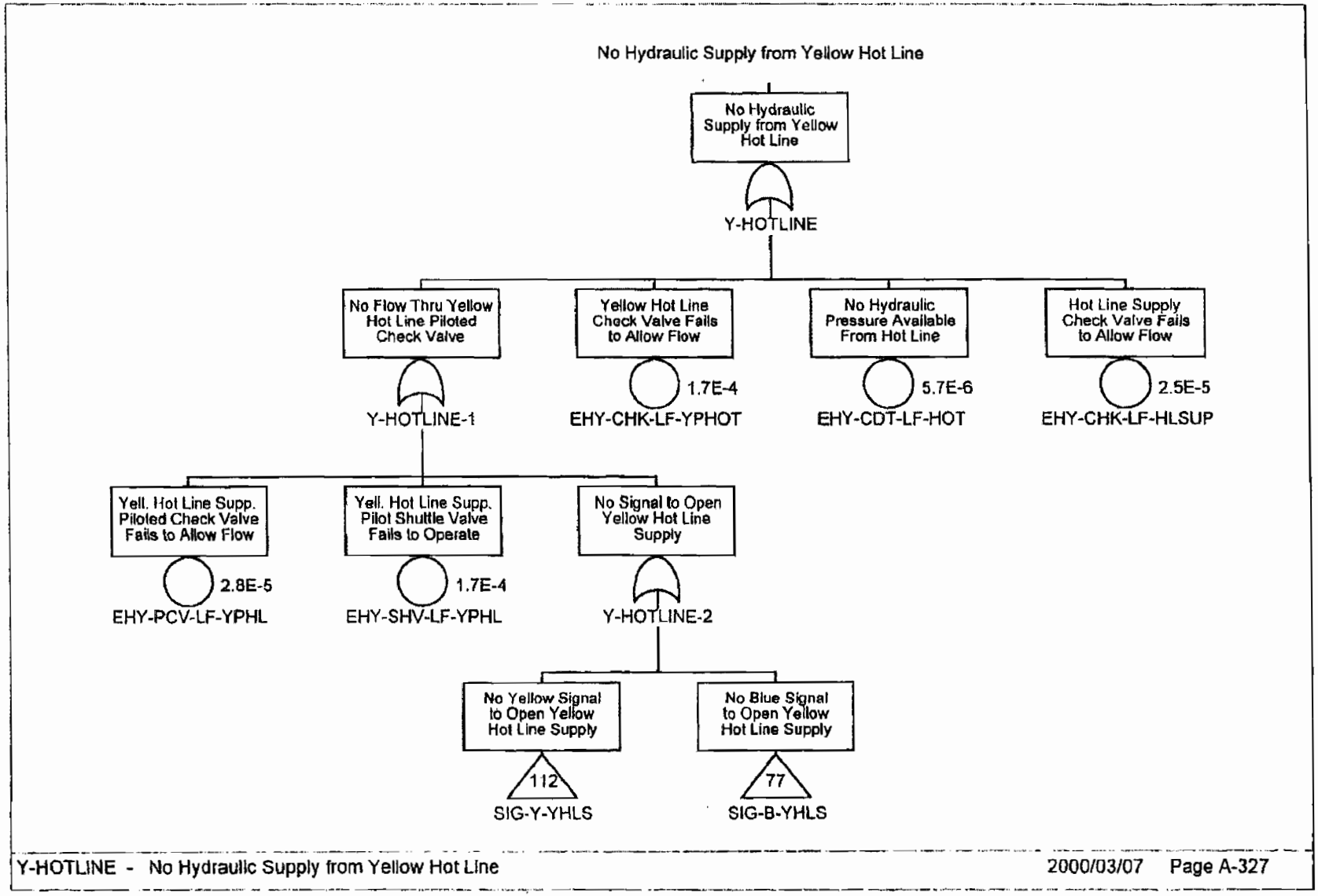

Confidential Treatment Requested by Transocean Holdings LLC

TRN-HCEC-00056775

No Yellow Hydraulic Manifold Supply

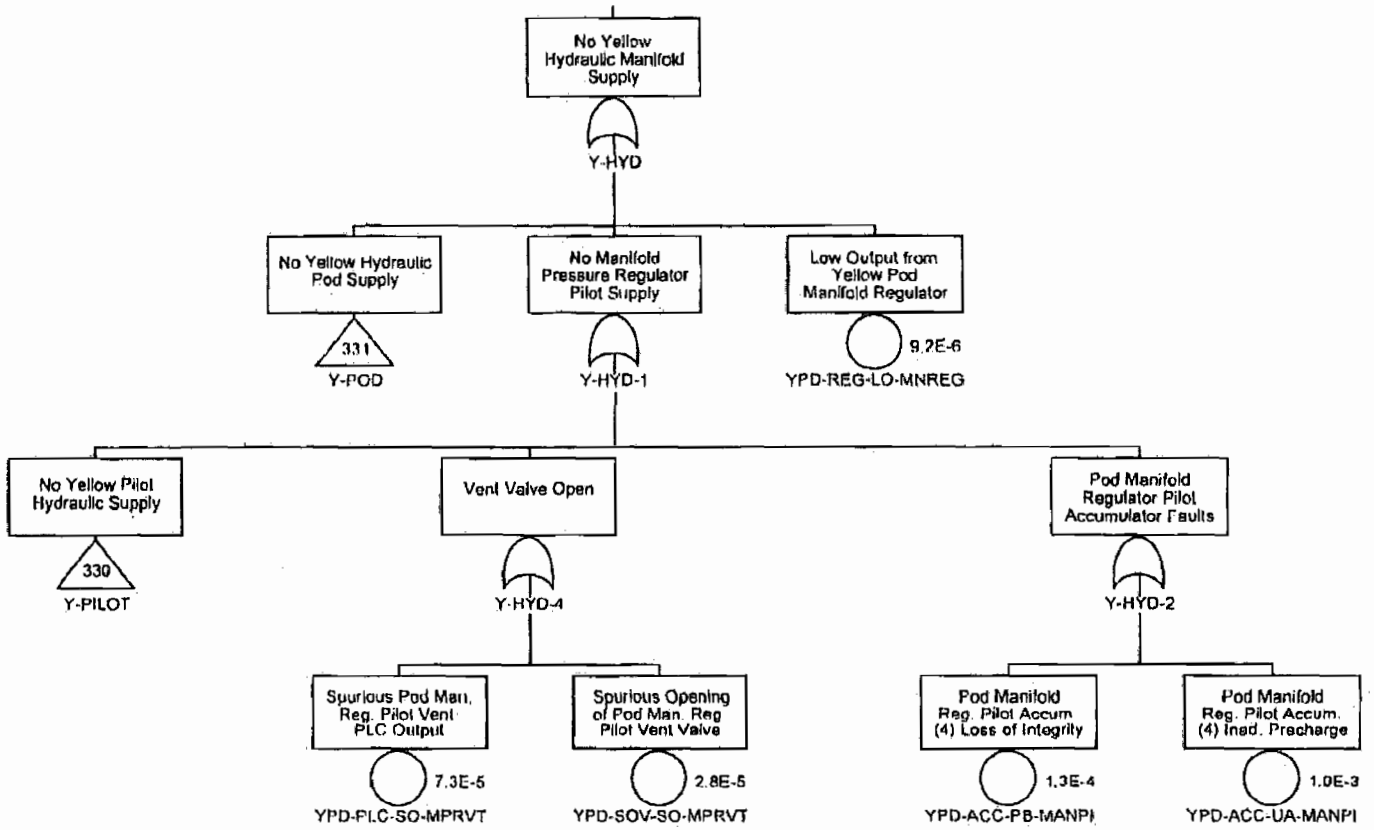

Confidential Treatment Requested by Transocean Holdings LLC

TRN-HCEC-00056776

Yellow LA Regulator Fails to Provide 3000 psi Supply

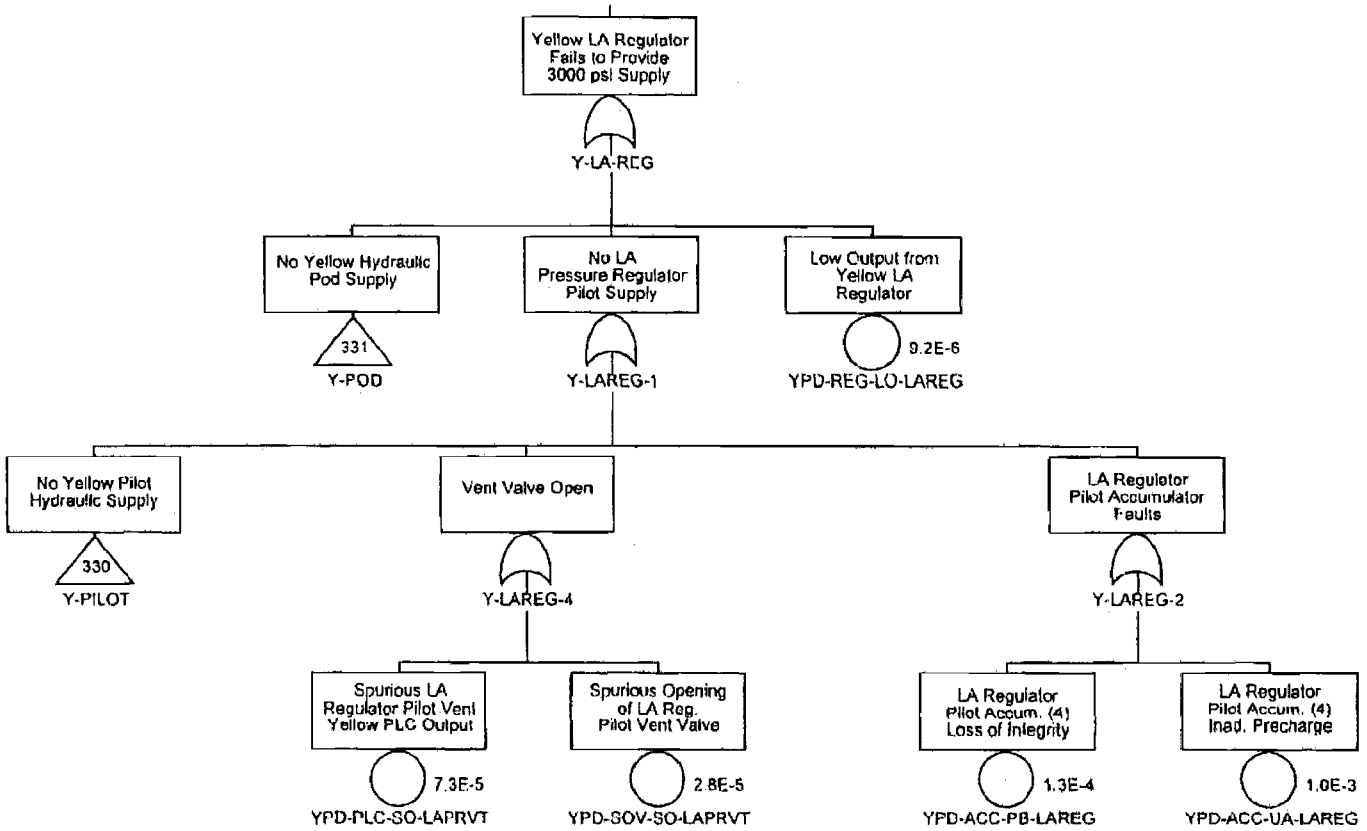

Confidential Treatment Requested by Transocean Holdings LLC

TRN-HCEC-00056777

No Yellow Pilot Hydraulic Supply

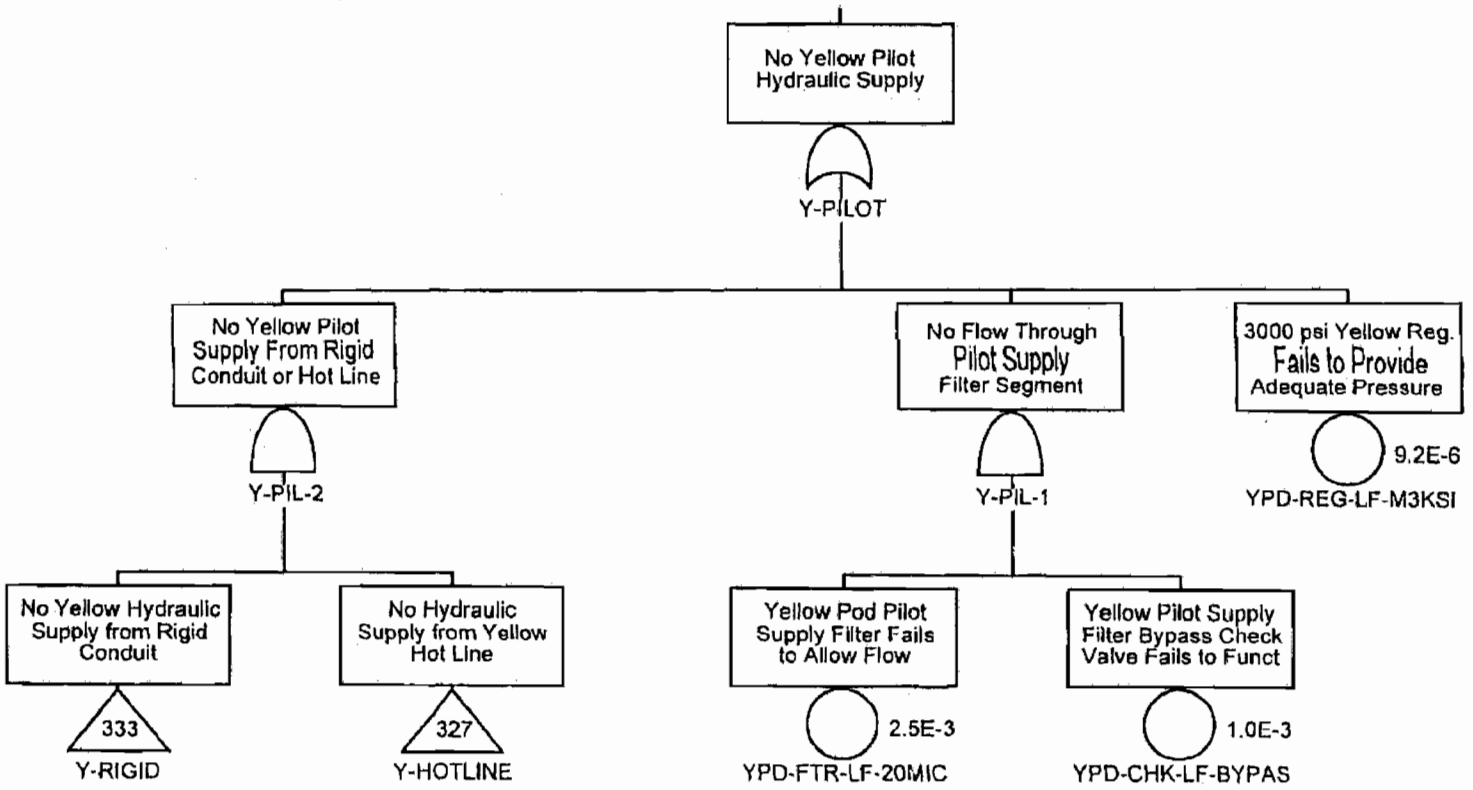

Confidential Treatment Requested by Transocean Holdings LLC

TRN-HCEC-00056778

No Yellow Hydraulic Pod Supply

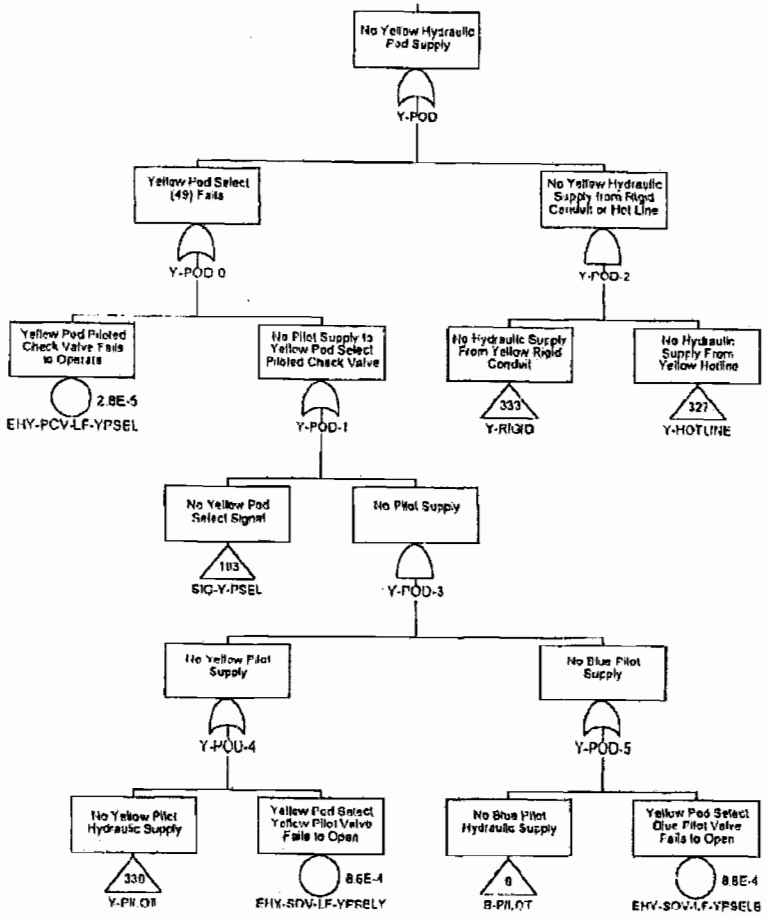

Confidential Treatment Requested by Transocean Holdings LLC

TRN-HCEC-00056779

Yellow LMRP Connector Reg. Fails to Provide 3000 psi Supply

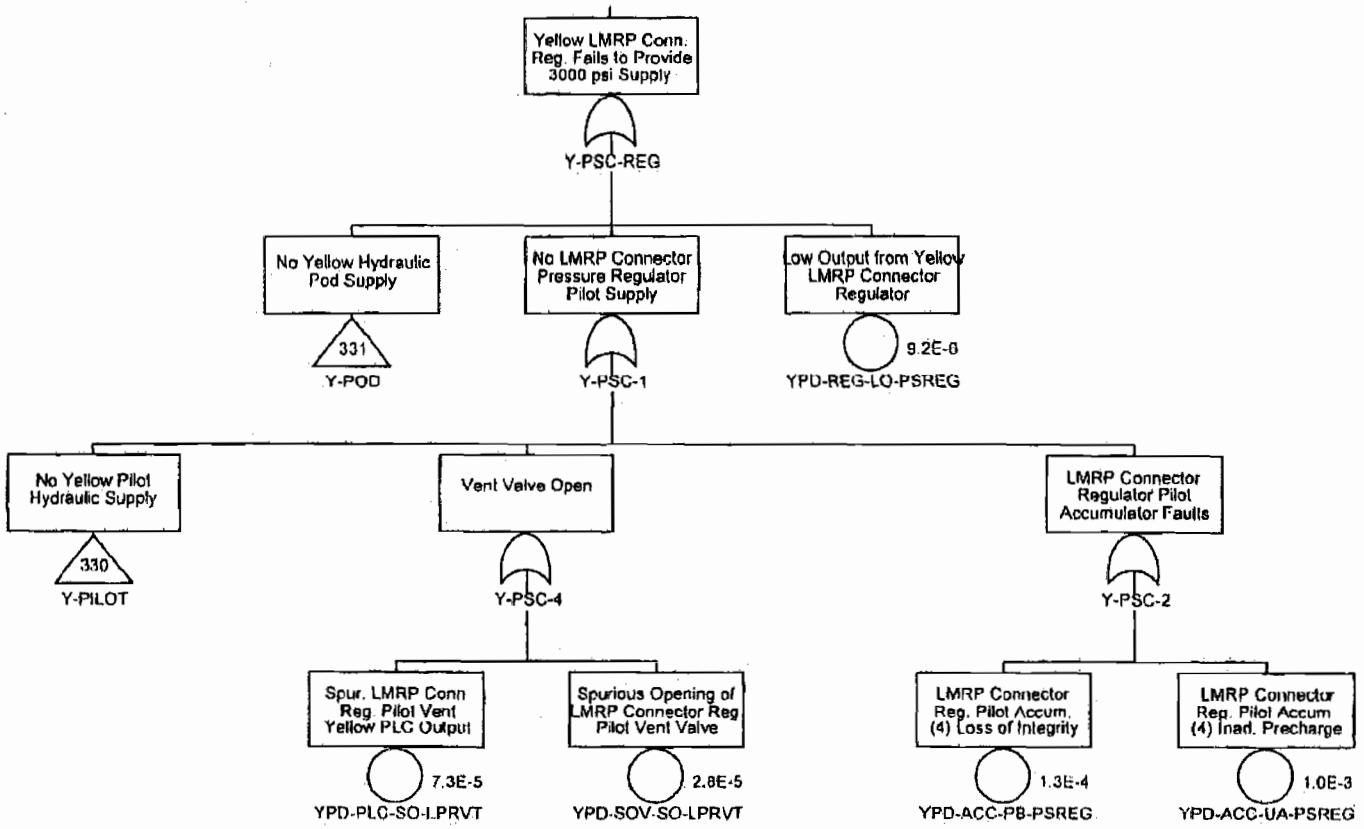

Confidential Treatment Requested by Transocean Holdings LLC

TRN-HCEC-00056780

No Yellow Hydraulic Supply from Rigid Conduit

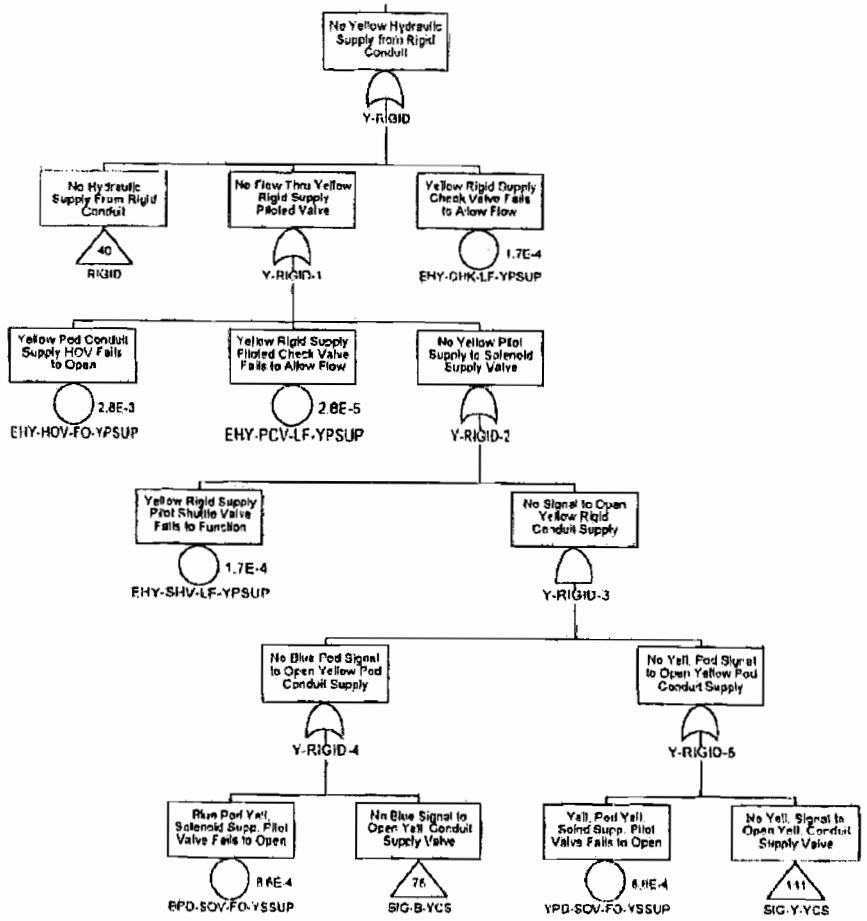

Confidential Treatment Requested by Transocean Holdings LLC

TRN-HCEC-00056781

Yellow UA Regulator Fails to Provide 3000 psi Supply

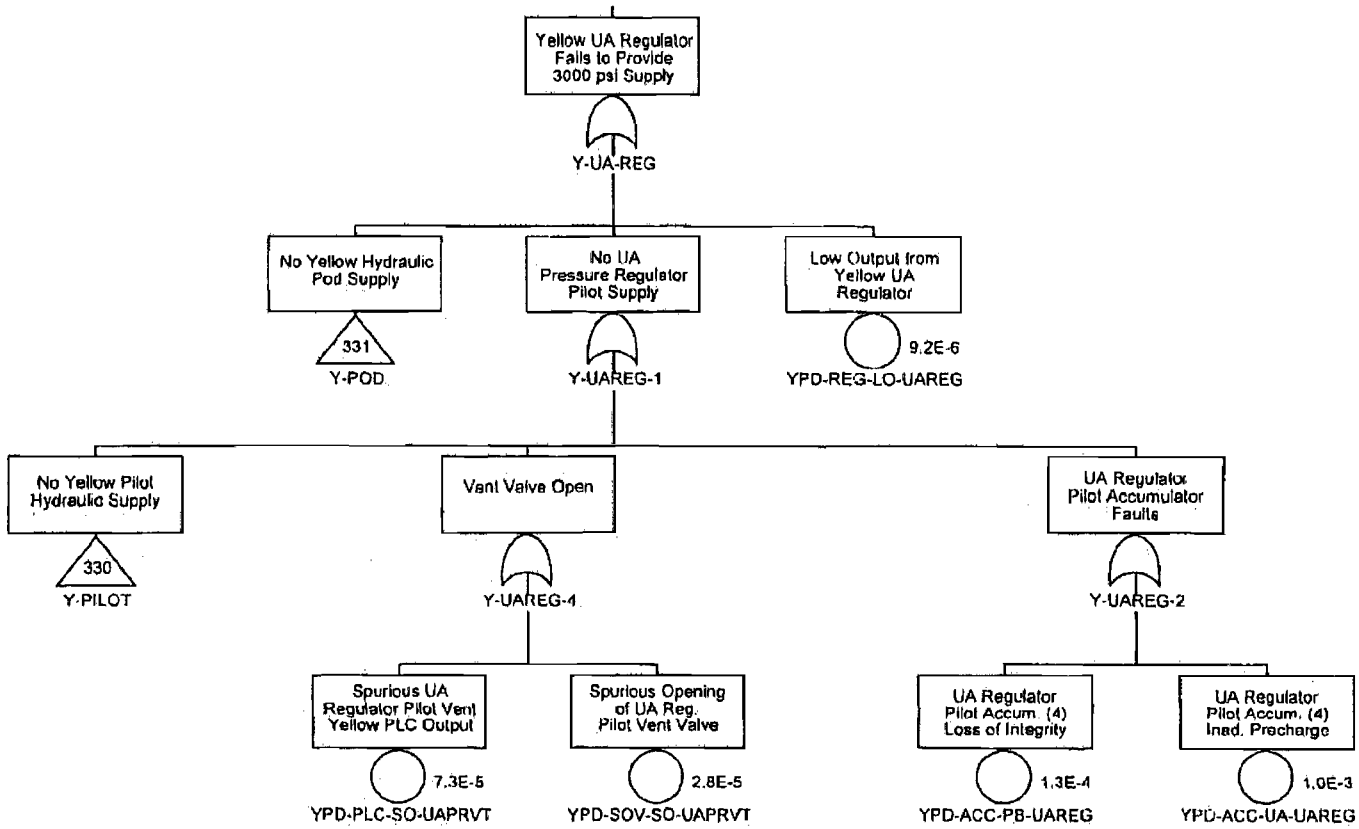

Appendix B

Data

Table B-1: Basic Event Data

No.	Identifier[1]	UA	Lambda	Tau	Description	Basis
1	BCP-CON-LF-JBOXB	1.50E-08	3.00E-08	1	Failure of Blue J-Box to Pass Signal	IEEE-500, 9.2 Composite
2	BPD-ACC-PB-LAREG	1.92E-05	1.60E-06	24	LA Regulator Pilot Accum. (4) Loss of Integrity	OREDA-92, 5.3.1, Ruptured pressure lines/accumulators
3	BPD-ACC-PB-MANPI	1.92E-05	1.60E-06	24	Pod Manifold Reg. Pilot Accum. (4) Loss of Integrity	OREDA-92, 5.3.1, Ruptured pressure lines/accumulators
4	BPD-ACC-PB-PSREG	1.92E-05	1.60E-06	24	LMRP Connector Reg. Pilot Accum. (4) Loss of Integrity	OREDA-92, 5.3.1, Ruptured pressure lines/accumulators
5	BPD-ACC-PB-UAREG	1.92E-05	1.60E-06	24	UA Regulator Pilot Accum. (4) Loss of Integrity	OREDA-92, 5.3.1, Ruptured pressure lines/accumulators
6	BPD-ACC-UA-LAREG	1.00E-03	NA	NA	LA Regulator Pilot Accum. (4) Inad. Precharge	Estimate
7	BPD-ACC-UA-MANPI	1.00E-03	NA	NA	Pod Manifold Reg. Pilot Accum. (4) Inad. Precharge	Estimate
8	BPD-ACC-UA-PSREG	1.00E-03	NA	NA	LMRP Connector Reg. Pilot Accum. (4) Inad. Precharge	Estimate
9	BPD-ACC-UA-UAREG	1.00E-03	NA	NA	UA Regulator Pilot Accum. (4) Inad. Precharge	Estimate
10	BPD-BRD-LF-A10	1.59E-05	3.18E-05	1	Carrier Board -A10 Fails	Input/Output Boards, OREDA-97, 4.1 abn. out+flo+part unknown
11	BPD-BRD-LF-A12	1.59E-05	3.18E-05	1	Piggyback Board -A12 Fails	Input/Output Boards, OREDA-97, 4.1 abn. out+flo+part unknown
12	BPD-BRD-LF-A13	1.59E-05	3.18E-05	1	Carrier Board -A13 Fails	Input/Output Boards, OREDA-97, 4.1 abn. out+flo+part unknown
13	BPD-BRD-LF-A14	1.59E-05	3.18E-05	1	Piggyback Board -A14 Fails	Input/Output Boards, OREDA-97, 4.1 abn. out+flo+part unknown
14	BPD-BRD-LF-A15	1.59E-05	3.18E-05	1	Piggyback Board -A15 Fails	Input/Output Boards, OREDA-97, 4.1 abn. out+flo+part unknown
15	BPD-BRD-LF-A16	1.59E-05	3.18E-05	1	Carrier Board -A16 Fails	Input/Output Boards, OREDA-97, 4.1 abn. out+flo+part unknown
16	BPD-BRD-LF-A17	1.59E-05	3.18E-05	1	Piggyback Board -A17 Fails	Input/Output Boards, OREDA-97, 4.1 abn. out+flo+part unknown
17	BPD-BRD-LF-A18	1.59E-05	3.18E-05	1	Piggyback Board -A18 Fails	Input/Output Boards, OREDA-97, 4.1 abn. out+flo+part unknown
18	BPD-BRD-LF-A19	1.59E-05	3.18E-05	1	Carrier Board -A19 Fails	Input/Output Boards, OREDA-97, 4.1 abn. out+flo+part unknown
19	BPD-BRD-LF-A2	1.59E-05	3.18E-05	1	Blue CXM/FISO Board -A2 Fails	Input/Output Boards, OREDA-97, 4.1 abn. out+flo+part unknown
20	BPD-BRD-LF-A21	1.59E-05	3.18E-05	1	Piggyback Board -A21 Fails	Input/Output Boards, OREDA-97, 4.1 abn. out+flo+part unknown
21	BPD-BRD-LF-A33	1.59E-05	3.18E-05	1	Blue CXM/FISO Board -A33 Fails	Input/Output Boards, OREDA-97, 4.1 abn. out+flo+part unknown
22	BPD-BRD-LF-A35	1.59E-05	3.18E-05	1	Carrier Board -A35 Fails	Input/Output Boards, OREDA-97, 4.1 abn. out+flo+part unknown
23	BPD-BRD-LF-A36	1.59E-05	3.18E-05	1	Piggyback Board -A36 Fails	Input/Output Boards, OREDA-97, 4.1 abn. out+flo+part unknown
24	BPD-BRD-LF-A37	1.59E-05	3.18E-05	1	Piggyback Board -A37 Fails	Input/Output Boards, OREDA-97, 4.1 abn. out+flo+part unknown
25	BPD-BRD-LF-A38	1.59E-05	3.18E-05	1	Carrier Board -A38 Fails	Input/Output Boards, OREDA-97, 4.1 abn. out+flo+part unknown
26	BPD-BRD-LF-A39	1.59E-05	3.18E-05	1	Piggyback Board -A39 Fails	Input/Output Boards, OREDA-97, 4.1 abn. out+flo+part unknown
27	BPD-BRD-LF-A4	1.59E-05	3.18E-05	1	Carrier Board -A4 Fails	Input/Output Boards, OREDA-97, 4.1 abn. out+flo+part unknown
28	BPD-BRD-LF-A41	1.59E-05	3.18E-05	1	Carrier Board -A41 Fails	Input/Output Boards, OREDA-97, 4.1 abn. out+flo+part unknown
29	BPD-BRD-LF-A43	1.59E-05	3.18E-05	1	Piggyback Board -A43 Fails	Input/Output Boards, OREDA-97, 4.1 abn. out+flo+part unknown
30	BPD-BRD-LF-A44	1.59E-05	3.18E-05	1	Carrier Board -A44 Fails	Input/Output Boards, OREDA-97, 4.1 abn. out+flo+part unknown
31	BPD-BRD-LF-A45	1.59E-05	3.18E-05	1	Piggyback Board -A45 Fails	Input/Output Boards, OREDA-97, 4.1 abn. out+flo+part unknown
32	BPD-BRD-LF-A46	1.59E-05	3.18E-05	1	Piggyback Board -A46 Fails	Input/Output Boards, OREDA-97, 4.1 abn. out+flo+part unknown
33	BPD-BRD-LF-A47	1.59E-05	3.18E-05	1	Carrier Board -A47 Fails	Input/Output Boards, OREDA-97, 4.1 abn. out+flo+part unknown
34	BPD-BRD-LF-A48	1.59E-05	3.18E-05	1	Piggyback Board -A48 Fails	Input/Output Boards, OREDA-97, 4.1 abn. out+flo+part unknown
35	BPD-BRD-LF-A49	1.59E-05	3.18E-05	1	Piggyback Board -A49 Fails	Input/Output Boards, OREDA-97, 4.1 abn. out+flo+part unknown

[1]See Table B-4, Page B-25 for event naming convention

Confidential Treatment Requested by Transocean Holdings LLC

TRN-HCEC-00056783

Table B-1: Basic Event Data (continued)

No.	Identifier	UA	Lambda	Tau	Description	Basis
36	BPD-BRD-LF-A5	1.59E-05	3.18E-05	1	Piggyback Board -A5 Fails	Input/Output Boards, OREDA-97, 4.1 abn. out+flo+part unknown
37	BPD-BRD-LF-A50	1.59E-05	3.18E-05	1	Carrier Board -A50 Fails	Input/Output Boards, OREDA-97, 4.1 abn. out+flo+part unknown
38	BPD-BRD-LF-A52	1.59E-05	3.18E-05	1	Piggyback Board -A52 Fails	Input/Output Boards, OREDA-97, 4.1 abn. out+flo+part unknown
39	BPD-BRD-LF-A6	1.59E-05	3.18E-05	1	Piggyback Board -A6 Fails	Input/Output Boards, OREDA-97, 4.1 abn. out+flo+part unknown
40	BPD-BRD-LF-A7	1.59E-05	3.18E-05	1	Carrier Board -A7 Fails	Input/Output Boards, OREDA-97, 4.1 abn. out+flo+part unknown
41	BPD-BRD-LF-A8	1.59E-05	3.18E-05	1	Piggyback Board -A8 Fails	Input/Output Boards, OREDA-97, 4.1 abn. out+flo+part unknown
42	BPD-BUS-LF-VMEA	1.00E-05	NA	NA	Blue VME Bus A Fails	Estimate
43	BPD-BUS-LF-VMEB	1.00E-05	NA	NA	Blue VME Bus B Fails	Estimate
44	BPD-CBL-LF-CABLE	3.81E-06	7.62E-06	1	Blue Pod Control/Power Cable Fails	OREDA-97, 5.1.2, 4 failures/5.25E5 hrs
45	BPD-CHK-LF-BYPAS	1.04E-03	2.08E-06	1000	Blue Pilot Supply Filter Bypass Check Valve Fails to Function	IEEE-500, 11.2.3, Composite, all
46	BPD-CON-LF-JBOXB	1.50E-08	3.00E-08	1	Failure of Blue J-Box to Pass Signal	IEEE-500, 9.2 Composite
47	BPD-CON-LF-OPNFC	2.13E-01	5.00E-01	1	Pie Connector Failure to Maintain Integrity - Open Face	Estimate
48	BPD-CON-LF-UNPLG	1.26E-04	2.52E-04	1	Pie Connector Male Plug Unplugged	Estimate (lognormal 95%=1e-2,5%=1e-6)/cycle-pod, cycle=2160 hrs, 108 plugs/pod
49	BPD-CON-LF-X10	1.02E-05	2.05E-05	1	Blue Pod Connector -X10 Fails	OREDA-97, 5.1.2, Control Connectors, 13.04%
50	BPD-CON-LF-X19	1.02E-05	2.05E-05	1	Blue Pod Pie Connector -X19 Fails	OREDA-97, 5.1.2, Control Connectors, 13.04%
51	BPD-CON-LF-X19A	1.02E-05	2.05E-05	1	Blue Pod Pie Connector -X19A	OREDA-97, 5.1.2, Control Connectors, 13.04%
52	BPD-CON-LF-X19B	1.02E-05	2.05E-05	1	Blue Pod Pie Connector -X19B	OREDA-97, 5.1.2, Control Connectors, 13.04%
53	BPD-CON-LF-X19C	1.02E-05	2.05E-05	1	Blue Pod Pie Connector -X19C	OREDA-97, 5.1.2, Control Connectors, 13.04%
54	BPD-CON-LF-X19D	1.02E-05	2.05E-05	1	Blue Pod Pie Connector -X19D	OREDA-97, 5.1.2, Control Connectors, 13.04%
55	BPD-CON-LF-X21	1.02E-05	2.05E-05	1	Blue Pod Pie Connector -X21 Fails	OREDA-97, 5.1.2, Control Connectors, 13.04%
56	BPD-CON-LF-X21B	1.02E-05	2.05E-05	1	Blue Pod Pie Connector -X21B Plug Fails	OREDA-97, 5.1.2, Control Connectors, 13.04%
57	BPD-CON-LF-X21D	1.02E-05	2.05E-05	1	Blue Pod Pie Connector -X21D Plug Fails	OREDA-97, 5.1.2, Control Connectors, 13.04%
58	BPD-CON-LF-X21E	1.02E-05	2.05E-05	1	Blue Pod Pie Connector -X21E	OREDA-97, 5.1.2, Control Connectors, 13.04%
59	BPD-CON-LF-X23	1.02E-05	2.05E-05	1	Blue Pod Pie Connector -X23 Fails	OREDA-97, 5.1.2, Control Connectors, 13.04%
60	BPD-CON-LF-X23A	1.02E-05	2.05E-05	1	Blue Pod Pie Connector -X23A	OREDA-97, 5.1.2, Control Connectors, 13.04%
61	BPD-CON-LF-X23E	1.02E-05	2.05E-05	1	Blue Pod Pie Connector -X23E	OREDA-97, 5.1.2, Control Connectors, 13.04%
62	BPD-CON-LF-X28	1.02E-05	2.05E-05	1	Blue Pod Pie Connector -X28 Fails	OREDA-97, 5.1.2, Control Connectors, 13.04%
63	BPD-CON-LF-X28E	1.02E-05	2.05E-05	1	Blue Pod Pie Connector -X28E	OREDA-97, 5.1.2, Control Connectors, 13.04%
64	BPD-CON-LF-X30	1.02E-05	2.05E-05	1	Blue Pod Pie Connector -X30 Fails	OREDA-97, 5.1.2, Control Connectors, 13.04%
65	BPD-CON-LF-X30A	1.02E-05	2.05E-05	1	Blue Pod Pie Connector -X30A	OREDA-97, 5.1.2, Control Connectors, 13.04%
66	BPD-CON-LF-X30B	1.02E-05	2.05E-05	1	Blue Pod Pie Connector -X30B	OREDA-97, 5.1.2, Control Connectors, 13.04%
67	BPD-CON-LF-X30C	1.02E-05	2.05E-05	1	Blue Pod Pie Connector -X30C	OREDA-97, 5.1.2, Control Connectors, 13.04%
68	BPD-CON-LF-X30D	1.02E-05	2.05E-05	1	Blue Pod Pie Connector -X30D Plug Fails	OREDA-97, 5.1.2, Control Connectors, 13.04%
69	BPD-CON-LF-X30E	1.02E-05	2.05E-05	1	Blue Pod Pie Connector -X30E	OREDA-97, 5.1.2, Control Connectors, 13.04%
70	BPD-CON-LF-X31	1.02E-05	2.05E-05	1	Blue Pod Pie Connector -X31 Fails	OREDA-97, 5.1.2, Control Connectors, 13.04%

Confidential Treatment Requested by Transocean Holdings LLC

TRN-HCEC-00056784

Table B-1: Basic Event Data (continued)

No.	Identifier	UA	Lambda	Tau	Description	Basis
71	BPD-CON-LF-X31A	1.02E-05	2.05E-05	1	Blue Pod Pie Connector -X31A	OREDA-97, 5.1.2, Control Connectors, 13.04%
72	BPD-CON-LF-X31B	1.02E-05	2.05E-05	1	Blue Pod Pie Connector -X31B	OREDA-97, 5.1.2, Control Connectors, 13.04%
73	BPD-CON-LF-X31D	1.02E-05	2.05E-05	1	Blue Pod Pie Connector -X31D	OREDA-97, 5.1.2, Control Connectors, 13.04%
74	BPD-CON-LF-X31F	1.02E-05	2.05E-05	1	Blue Pod Pie Connector -X31F	OREDA-97, 5.1.2, Control Connectors, 13.04%
75	BPD-CON-LF-X32	1.02E-05	2.05E-05	1	Blue Pod Pie Connector -X32 Fails	OREDA-97, 5.1.2, Control Connectors, 13.04%
76	BPD-CON-LF-X32F	1.02E-05	2.05E-05	1	Blue Pod Pie Connector -X32F	OREDA-97, 5.1.2, Control Connectors, 13.04%
77	BPD-CON-LF-X34	1.02E-05	2.05E-05	1	Blue Pod Pie Connector -X34 Fails	OREDA-97, 5.1.2, Control Connectors, 13.04%
78	BPD-CON-LF-X34B	1.02E-05	2.05E-05	1	Blue Pod Pie Connector -X34B	OREDA-97, 5.1.2, Control Connectors, 13.04%
79	BPD-CON-LF-X34F	1.02E-05	2.05E-05	1	Blue Pod Pie Connector -X34F	OREDA-97, 5.1.2, Control Connectors, 13.04%
80	BPD-CON-LF-X35	1.02E-05	2.05E-05	1	Blue Pod Pie Connector -X35 Fails	OREDA-97, 5.1.2, Control Connectors, 13.04%
81	BPD-CON-LF-X35E	1.02E-05	2.05E-05	1	Blue Pod Pie Connector -X35E	OREDA-97, 5.1.2, Control Connectors, 13.04%
82	BPD-CON-LF-X35F	1.02E-05	2.05E-05	1	Blue Pod Pie Connector -X35F	OREDA-97, 5.1.2, Control Connectors, 13.04%
83	BPD-CON-LF-X36	1.02E-05	2.05E-05	1	Blue Pod Pie Connector -X36 Fails	OREDA-97, 5.1.2, Control Connectors, 13.04%
84	BPD-CON-LF-X36A	1.02E-05	2.05E-05	1	Blue Pod Pie Connector -X36A Plug Fails	OREDA-97, 5.1.2, Control Connectors, 13.04%
85	BPD-CON-LF-X38	1.02E-05	2.05E-05	1	Blue Pod Pie Connector -X38 Fails	OREDA-97, 5.1.2, Control Connectors, 13.04%
86	BPD-CON-LF-X38E	1.02E-05	2.05E-05	1	Blue Pod Pie Connector -X38E Plug Fails	OREDA-97, 5.1.2, Control Connectors, 13.04%
87	BPD-CON-LF-X39	1.02E-05	2.05E-05	1	Blue Pod Pie Connector -X39 Fails	OREDA-97, 5.1.2, Control Connectors, 13.04%
88	BPD-CON-LF-X39A	1.02E-05	2.05E-05	1	Blue Pod Pie Connector -X39A	OREDA-97, 5.1.2, Control Connectors, 13.04%
89	BPD-CON-LF-X39B	1.02E-05	2.05E-05	1	Blue Pod Pie Connector -X39B	OREDA-97, 5.1.2, Control Connectors, 13.04%
90	BPD-CON-LF-X39C	1.02E-05	2.05E-05	1	Blue Pod Pie Connector -X39C	OREDA-97, 5.1.2, Control Connectors, 13.04%
91	BPD-CON-LF-X39D	1.02E-05	2.05E-05	1	Blue Pod Pie Connector -X39D	OREDA-97, 5.1.2, Control Connectors, 13.04%
92	BPD-CON-LF-X39E	1.02E-05	2.05E-05	1	Blue Pod Pie Connector -X39E	OREDA-97, 5.1.2, Control Connectors, 13.04%
93	BPD-CON-LF-X39F	1.02E-05	2.05E-05	1	Blue Pod Pie Connector -X39F	OREDA-97, 5.1.2, Control Connectors, 13.04%
94	BPD-CON-LK-PIE	9.00E-05	1.80E-04	1	Pie Connector Failure to Maintain Integrity	Estimate (1e-5/hr*18 connectors)
95	BPD-CPU-LF-A3	1.31E-06	2.62E-06	1	Blue CPU Board -A3 Fails	CPU Boards, OREDA-97, 4.1 abn. out+flo+part unknown
96	BPD-CPU-LF-A34	1.31E-06	2.62E-06	1	Blue CPU Board -A34 Fails	CPU Boards, OREDA-97, 4.1 abn. out+flo+part unknown
97	BPD-FTR-LF-20MIC	3.60E-04	3.00E-05	24	Blue Pod Pilot Supply Filter Fails to Allow Flow	OREDA-92, 5.3.1, Clogged Filter/line
98	BPD-FUS-LF-F1	1.00E-08	2.00E-08	1	Fuse Board -F1 Fails	IEEE-500, 3.51, Fuses up to 1000V
99	BPD-FUS-LF-F2	1.00E-08	2.00E-08	1	Fuse Board -F2 Fails	IEEE-500, 3.51, Fuses up to 1000V
100	BPD-FUS-LF-F3	1.00E-08	2.00E-08	1	Fuse Board -F3 Fails	IEEE-500, 3.51, Fuses up to 1000V
101	BPD-FUS-LF-F4	1.00E-08	2.00E-08	1	Fuse Board -F4 Fails	IEEE-500, 3.51, Fuses up to 1000V
102	BPD-HOV-FO-CSRHP	2.79E-03	3.33E-05	168	Blue HP CSR HOV Fails to Open	OREDA-97, 4.4, body/internals, seat, seals, actuator
103	BPD-HOV-FO-CSRNP	2.79E-03	3.33E-05	168	Blue Normal CSR HOV Fails to Open	OREDA-97, 4.4, body/internals, seat, seals, actuator
104	BPD-HOV-FO-LACLS	2.79E-03	3.33E-05	168	Blue LA Close HOV Fails to Open	OREDA-97, 4.4, body/internals, seat, seals, actuator
105	BPD-HOV-FO-LPR	2.79E-03	3.33E-05	168	Blue LPR HOV Fails to Open	OREDA-97, 4.4, body/internals, seat, seals, actuator
106	BPD-HOV-FO-MPR	1.65E-02	3.33E-05	1000	Blue MPR HOV Fails to Open	OREDA-97, 4.4, body/internals, seat, seals, actuator

Confidential Treatment Requested by Transocean Holdings LLC

TRN-HCEC-00056785

Table B-1: Basic Event Data (continued)

No.	Identifier	UA	Lambda	Tau	Description	Basis
107	BPD-HOV-FO-PDISC	1.65E-02	3.33E-05	1000	Blue Primary Disconnect HOV Fails to Open	OREDA-97, 4.4, body/internals, seat, seals, actuator
108	BPD-HOV-FO-SDISC	1.65E-02	3.33E-05	1000	Blue Secondary Disconnect HOV Fails to Open	OREDA-97, 4.4, body/internals, seat, seals, actuator
109	BPD-HOV-FO-UACLS	2.79E-03	3.33E-05	168	Blue UA Close HOV Fails to Open	OREDA-97, 4.4, body/internals, seat, seals, actuator
110	BPD-HOV-FO-UPR	2.79E-03	3.33E-05	168	Blue UPR HOV Fails to Open	OREDA-97, 4.4, body/internals, seat, seals, actuator
111	BPD-HOV-FO-USRHP	2.79E-03	3.33E-05	168	Blue HP USR HOV Fails to Open	OREDA-97, 4.4, body/internals, seat, seals, actuator
112	BPD-HOV-FO-USRNP	2.79E-03	3.33E-05	168	Blue USR HOV Fails to Open	OREDA-97, 4.4, body/internals, seat, seals, actuator
113	BPD-HOV-LF-LIC	3.85E-03	4.60E-05	168	Blue Hydraulic Operated LIC Valve Fails to Function	OREDA-92, 7.5.1.6, all modes
114	BPD-HOV-LF-LIK	3.85E-03	4.60E-05	168	Blue Hydraulic Operated LIK Valve Fails to Function	OREDA-92, 7.5.1.6, all modes
115	BPD-HOV-LF-LOC	3.85E-03	4.60E-05	168	Blue Hydraulic Operated LOC Valve Fails to Function	OREDA-92, 7.5.1.6, all modes
116	BPD-HOV-LF-LOK	3.85E-03	4.60E-05	168	Blue Hydraulic Operated LOK Valve Fails to Function	OREDA-92, 7.5.1.6, all modes
117	BPD-HOV-LF-UIC	3.85E-03	4.60E-05	168	Blue Hydraulic Operated UIC Valve Fails to Function	OREDA-92, 7.5.1.6, all modes
118	BPD-HOV-LF-UIK	3.85E-03	4.60E-05	168	Blue Hydraulic Operated UIK Valve Fails to Function	OREDA-92, 7.5.1.6, all modes
119	BPD-HOV-LF-UOC	3.85E-03	4.60E-05	168	Blue Hydraulic Operated UOC Valve Fails to Function	OREDA-92, 7.5.1.6, all modes
120	BPD-HOV-LF-UOK	3.85E-03	4.60E-05	168	Blue Hydraulic Operated UOK Valve Fails to Function	OREDA-92, 7.5.1.6, all modes
121	BPD-ISO-SO-ISMTR	2.00E-07	4.00E-07	1	Spurious Op. of CDP Isometer Shuts Down Blue Pod	IEEE-500, 3.1, Circuit Breakers, Spurious Operation
122	BPD-MOD-LF-A1	5.00E-04	1.00E-03	1	Blue Modem -A1 Fails to Pass Signal	Estimate
123	BPD-MOD-LF-A32	5.00E-04	1.00E-03	1	Blue Modem -A32 Fails to Pass Signal	Estimate
124	BPD-PLC-SO-CF-OP	7.30E-05	1.46E-04	1	Spurious Blue PLC Output to Open Conduit Flush Valve	OREDA-97, 4.1.2, PLC Spurious Operation
125	BPD-PLC-SO-LAPRVT	7.30E-05	1.46E-04	1	Spurious LA Regulator Pilot Vent Blue PLC Output	OREDA-97, 4.1.2, PLC Spurious Operation
126	BPD-PLC-SO-LPRVT	7.30E-05	1.46E-04	1	Spur. LMRP Conn. Reg. Pilot Vent Blue PLC Output	OREDA-97, 4.1.2, PLC Spurious Operation
127	BPD-PLC-SO-MPRVT	7.30E-05	1.46E-04	1	Spurious Pod Man. Reg. Pilot Vent PLC Output	OREDA-97, 4.1.2, PLC Spurious Operation
128	BPD-PLC-SO-UAPRVT	7.30E-05	1.46E-04	1	Spurious UA Regulator Pilot Vent Blue PLC Output	OREDA-97, 4.1.2, PLC Spurious Operation
129	BPD-PSP-LF-G1	1.45E-05	2.90E-05	1	Blue Power Supply Board -G1 Fails	Power Supply, OREDA-92, 5.5.2
130	BPD-PSP-LF-G2	1.45E-05	2.90E-05	1	Blue Power Supply Board -G2 Fails	Power Supply, OREDA-92, 5.5.2
131	BPD-PSP-LF-G3	1.45E-05	2.90E-05	1	Blue Power Supply Board -G3 Fails	Power Supply, OREDA-92, 5.5.2
132	BPD-PSP-LF-G4	1.45E-05	2.90E-05	1	Blue Power Supply Board -G4 Fails	Power Supply, OREDA-92, 5.5.2
133	BPD-PSP-LF-G5	1.45E-05	2.90E-05	1	Blue Power Supply Board -G5 Fails	Power Supply, OREDA-92, 5.5.2
134	BPD-PSP-LF-G6	1.45E-05	2.90E-05	1	Blue Power Supply Board -G6 Fails	Power Supply, OREDA-92, 5.5.2
135	BPD-PSP-LF-G7	1.45E-05	2.90E-05	1	Blue Power Supply Board -G7 Fails	Power Supply, OREDA-92, 5.5.2
136	BPD-PSP-LF-G8	1.45E-05	2.90E-05	1	Blue Power Supply Board -G8 Fails	Power Supply, OREDA-92, 5.5.2
137	BPD-REG-LF-M3KSI	1.32E-06	1.10E-07	24	3000 psi Blue Reg. Fails to Provide Adequate Pressure	IEEE-500, 8.25.6
138	BPD-REG-LO-LAREG	1.32E-06	1.10E-07	24	Low Output from Blue LA Regulator	IEEE-500, 8.25.6
139	BPD-REG-LO-MNREG	1.32E-06	1.10E-07	24	Low Output from Blue Pod Manifold Regulator	IEEE-500, 8.25.6
140	BPD-REG-LO-PSREG	1.32E-06	1.10E-07	24	Low Output from Blue LMRP Connector Regulator	IEEE-500, 8.25.6
141	BPD-REG-LO-UAREG	1.32E-06	1.10E-07	24	Low Output from Blue UA Regulator	IEEE-500, 8.25.6
142	BPD-SOV-FC-BSR-O	8.65E-04	1.03E-05	168	Blue Blind Shear Ram Open Pilot Vlv Fails to Close	OREDA-97, 4.4, Act. Device, control unit, others, unknown

Confidential Treatment Requested by Transocean Holdings LLC

TRN-HCEC-00056786

Table B-1: Basic Event Data (continued)

No.	Identifier	UA	Lambda	Tau	Description	Basis
143	BPD-SOV-FC-CSR-O	8.65E-04	1.03E-05	168	Blue Casing Shear Ram Open Pilot Valve Fails to Close	OREDA-97, 4.4, Act. Device, control unit, others, unknown
144	BPD-SOV-FC-LIC-O	8.65E-04	1.03E-05	168	Blue LIC Open Pilot Valve Fails to Close	OREDA-97, 4.4, Act. Device, control unit, others, unknown
145	BPD-SOV-FC-LIK-O	8.65E-04	1.03E-05	168	Blue LIK Open Pilot Valve Fails to Close	OREDA-97, 4.4, Act. Device, control unit, others, unknown
146	BPD-SOV-FC-LOC-O	8.65E-04	1.03E-05	168	Blue LOC Open Pilot Valve Fails to Close	OREDA-97, 4.4, Act. Device, control unit, others, unknown
147	BPD-SOV-FC-LOK-O	8.65E-04	1.03E-05	168	Blue LOK Open Pilot Valve Fails to Close	OREDA-97, 4.4, Act. Device, control unit, others, unknown
148	BPD-SOV-FC-PDS-L	8.65E-04	1.03E-05	168	Blue LMRP Latch Pilot Valve Fails to Close	OREDA-97, 4.4, Act. Device, control unit, others, unknown
149	BPD-SOV-FC-UIC-O	8.65E-04	1.03E-05	168	Blue UIC Open Pilot Valve Fails to Close	OREDA-97, 4.4, Act. Device, control unit, others, unknown
150	BPD-SOV-FC-UIK-O	8.65E-04	1.03E-05	168	Blue UIK Open Pilot Valve Fails to Close	OREDA-97, 4.4, Act. Device, control unit, others, unknown
151	BPD-SOV-FC-UOC-O	8.65E-04	1.03E-05	168	Blue UOC Open Pilot Valve Fails to Close	OREDA-97, 4.4, Act. Device, control unit, others, unknown
152	BPD-SOV-FC-UOK-O	8.65E-04	1.03E-05	168	Blue UOK Open Pilot Valve Fails to Close	OREDA-97, 4.4, Act. Device, control unit, others, unknown
153	BPD-SOV-FO-CSRHP	8.65E-04	1.03E-05	168	Blue CHP Shear Pilot Valve Fails to Open	OREDA-97, 4.4, Act. Device, control unit, others, unknown
154	BPD-SOV-FO-CSRNP	8.65E-04	1.03E-05	168	Blue Casing Shear Ram Pilot Valve Fails to Open	OREDA-97, 4.4, Act. Device, control unit, others, unknown
155	BPD-SOV-FO-LACLS	8.65E-04	1.03E-05	168	Blue LA Close Pilot Valve Fails to Open	OREDA-97, 4.4, Act. Device, control unit, others, unknown
156	BPD-SOV-FO-LIC-C	8.65E-04	1.03E-05	168	Blue LIC Close Pilot Valve Fails to Open	OREDA-97, 4.4, Act. Device, control unit, others, unknown
157	BPD-SOV-FO-LIC-O	8.65E-04	1.03E-05	168	Blue Open LIC Pilot Valve Fails to Open	OREDA-97, 4.4, Act. Device, control unit, others, unknown
158	BPD-SOV-FO-LIK-C	8.65E-04	1.03E-05	168	Blue LIK Close Pilot Valve Fails to Open	OREDA-97, 4.4, Act. Device, control unit, others, unknown
159	BPD-SOV-FO-LIK-O	8.65E-04	1.03E-05	168	Blue Open LIK Pilot Valve Fails to Open	OREDA-97, 4.4, Act. Device, control unit, others, unknown
160	BPD-SOV-FO-LOC-C	8.65E-04	1.03E-05	168	Blue LOC Close Pilot Valve Fails to Open	OREDA-97, 4.4, Act. Device, control unit, others, unknown
161	BPD-SOV-FO-LOC-O	8.65E-04	1.03E-05	168	Blue Open LOC Pilot Valve Fails to Open	OREDA-97, 4.4, Act. Device, control unit, others, unknown
162	BPD-SOV-FO-LOK-C	8.65E-04	1.03E-05	168	Blue LOK Close Pilot Valve Fails to Open	OREDA-97, 4.4, Act. Device, control unit, others, unknown
163	BPD-SOV-FO-LOK-O	8.65E-04	1.03E-05	168	Blue Open LOK Pilot Valve Fails to Open	OREDA-97, 4.4, Act. Device, control unit, others, unknown
164	BPD-SOV-FO-LPR	8.65E-04	1.03E-05	168	Blue Lower Pipe Ram Pilot Valve Fails to Open	OREDA-97, 4.4, Act. Device, control unit, others, unknown
165	BPD-SOV-FO-MPR	8.65E-04	1.03E-05	168	Blue Middle Pipe Ram Pilot Valve Fails to Open	OREDA-97, 4.4, Act. Device, control unit, others, unknown
166	BPD-SOV-FO-PDISC	8.65E-04	1.03E-05	168	Blue LMRP Disconn. Pilot Valve Fails to Open	OREDA-97, 4.4, Act. Device, control unit, others, unknown
167	BPD-SOV-FO-SDISC	8.65E-04	1.03E-05	168	Blue LMRP Disconn. Pilot Vlv Fails to Open	OREDA-97, 4.4, Act. Device, control unit, others, unknown
168	BPD-SOV-FO-UACLS	8.65E-04	1.03E-05	168	Blue UA Close Pilot Valve Fails to Open	OREDA-97, 4.4, Act. Device, control unit, others, unknown
169	BPD-SOV-FO-UIC-C	8.65E-04	1.03E-05	168	Blue UIC Close Pilot Valve Fails to Open	OREDA-97, 4.4, Act. Device, control unit, others, unknown
170	BPD-SOV-FO-UIC-O	8.65E-04	1.03E-05	168	Blue Open UIC Pilot Valve Fails to Open	OREDA-97, 4.4, Act. Device, control unit, others, unknown
171	BPD-SOV-FO-UIK-C	8.65E-04	1.03E-05	168	Blue UIK Close Pilot Valve Fails to Open	OREDA-97, 4.4, Act. Device, control unit, others, unknown
172	BPD-SOV-FO-UIK-O	8.65E-04	1.03E-05	168	Blue Open UIK Pilot Valve Fails to Open	OREDA-97, 4.4, Act. Device, control unit, others, unknown
173	BPD-SOV-FO-UOC-C	8.65E-04	1.03E-05	168	Blue UOC Close Pilot Valve Fails to Open	OREDA-97, 4.4, Act. Device, control unit, others, unknown
174	BPD-SOV-FO-UOC-O	8.65E-04	1.03E-05	168	Blue Open UOC Pilot Valve Fails to Open	OREDA-97, 4.4, Act. Device, control unit, others, unknown
175	BPD-SOV-FO-UOK-C	8.65E-04	1.03E-05	168	Blue UOK Close Pilot Valve Fails to Open	OREDA-97, 4.4, Act. Device, control unit, others, unknown
176	BPD-SOV-FO-UOK-O	8.65E-04	1.03E-05	168	Blue Open UOK Pilot Valve Fails to Open	OREDA-97, 4.4, Act. Device, control unit, others, unknown
177	BPD-SOV-FO-UPR	8.65E-04	1.03E-05	168	Blue Upper Pipe Ram Pilot Valve Fails to Open	OREDA-97, 4.4, Act. Device, control unit, others, unknown
178	BPD-SOV-FO-USRHP	8.65E-04	1.03E-05	168	Blue UHP Shear Pilot Valve Fails to Open	OREDA-97, 4.4, Act. Device, control unit, others, unknown

Confidential Treatment Requested by Transocean Holdings LLC TRN-HCEC-00056787

Table B-1: Basic Event Data (continued)

No.	Identifier	UA	Lambda	Tau	Description	Basis
179	BPD-SOV-FO-USRNP	8.65E-04	1.03E-05	168	Blue Blind Shear Ram Pilot Valve Fails to Open	OREDA-97, 4.4, Act. Device, control unit, others, unknown
180	BPD-SOV-FO-YSSUP	8.65E-04	1.03E-05	168	Blue Pod Yell. Solenoid Supp. Pilot Valve Fails to Open	OREDA-97, 4.4, Act. Device, control unit, others, unknown
181	BPD-SOV-RO-BSSUP	2.80E-05	2.33E-06	24	Blue Pod Blue Solnd Supp. Pilot Vlv Fails to Remain Open	OREDA-97, SPO=4.41%
182	BPD-SOV-SC-ACHRG	2.80E-05	2.33E-06	24	Blue Stack Acc. Charge Solenoid Valve Fails Closed	OREDA-97, SPO=4.41%
183	BPD-SOV-SO-ADUMP	2.80E-05	2.33E-06	24	Spurious Opening of Blue Accum. Dump Pilot Valve	OREDA-97, SPO=4.41%
184	BPD-SOV-SO-CF-OP	2.80E-05	2.33E-06	24	Spurious Opening of Conduit Flush Open Blue Pilot Valve	OREDA-97, SPO=4.41%
185	BPD-SOV-SO-LAPRVT	2.80E-05	2.33E-06	24	Spurious Opening of LA Reg. Pilot Vent Valve	OREDA-97, SPO=4.41%
186	BPD-SOV-SO-LPRVT	2.80E-05	2.33E-06	24	Spurious Opening of LMRP Connector Reg. Pilot Vent Valve	OREDA-97, SPO=4.41%
187	BPD-SOV-SO-MPRVT	2.80E-05	2.33E-06	24	Spurious Opening of Pod Man. Reg. Pilot Vent Valve	OREDA-97, SPO=4.41%
188	BPD-SOV-SO-UAPRVT	2.80E-05	2.33E-06	24	Spurious Opening of UA Reg. Pilot Vent Valve	OREDA-97, SPO=4.41%
189	CDA-BKR-LF-Q1	8.00E-07	1.60E-06	1	Breaker -Q1 Fails to Remain Closed	Breaker spurious ops, OREDA-92, 4.2.6.1
190	CDA-BKR-LF-Q4	8.00E-07	1.60E-06	1	CDP A Breaker -Q4 Fails	Breaker spurious ops, OREDA-92, 4.2.6.1
191	CDA-BKR-LF-Q5	8.00E-07	1.60E-06	1	CDP A Breaker -Q5 Fails	Breaker spurious ops, OREDA-92, 4.2.6.1
192	CDA-BKR-LF-Q7	8.00E-07	1.60E-06	1	CDP A Breaker -Q7 Fails	Breaker spurious ops, OREDA-92, 4.2.6.1
193	CDA-BRD-LF-A1	1.59E-05	3.18E-05	1	Failure of CXM/FISO Isolation Board -A1	Input/Output Boards, OREDA-97, 4.1 abn. out+flo+part unknown
194	CDA-BRD-LF-A4	1.59E-05	3.18E-05	1	Failure of CXM/FISO Isolation Board -A4	Input/Output Boards, OREDA-97, 4.1 abn. out+flo+part unknown
195	CDA-BUS-LF-PROFI	1.00E-05	NA	NA	CDP A Profibus A Fails	Estimate
196	CDA-BUS-LF-VME-A	1.00E-05	NA	NA	CDP A VME Bus Fails To Pass Signal	Estimate
197	CDA-CPU-LF-A2	1.31E-06	2.62E-06	1	CDP A CPU -A2 Fails To Process Signal	CPU Boards, OREDA-97, 4.1 abn. out+flo+part unknown
198	CDA-CPU-LF-A5	1.31E-06	2.62E-06	1	CDP A CPU -A5 Fails To Process Signal	CPU Boards, OREDA-97, 4.1 abn. out+flo+part unknown
199	CDA-FUS-LF-F10	1.00E-08	2.00E-08	1	Fuse -F10 Fails Open Circuit	IEEE-500, 3.51, Fuses up to 1000V
200	CDA-FUS-LF-F11	1.00E-08	2.00E-08	1	CDP A 6A Fuse -F11 Fails Open Circuit	IEEE-500, 3.51, Fuses up to 1000V
201	CDA-FUS-LF-F12	1.00E-08	2.00E-08	1	CDP A 6A Fuse -F12 Fails Open Circuit	IEEE-500, 3.51, Fuses up to 1000V
202	CDA-FUS-LF-F13	1.00E-08	2.00E-08	1	CDP A 2A Fuse -F13 Fails Open Circuit	IEEE-500, 3.51, Fuses up to 1000V
203	CDA-FUS-LF-F14	1.00E-08	2.00E-08	1	CDP A 2A Fuse -F14 Fails Open Circuit	IEEE-500, 3.51, Fuses up to 1000V
204	CDA-FUS-LF-F15	1.00E-08	2.00E-08	1	Fuse -F15 Fails Open Circuit	IEEE-500, 3.51, Fuses up to 1000V
205	CDA-FUS-LF-F16	1.00E-08	2.00E-08	1	Fuse -F16 Fails Open Circuit	IEEE-500, 3.51, Fuses up to 1000V
206	CDA-FUS-LF-F5	1.00E-08	2.00E-08	1	CDP A 6A Fuse -F5 Fails Open Circuit	IEEE-500, 3.51, Fuses up to 1000V
207	CDA-FUS-LF-F6	1.00E-08	2.00E-08	1	CDP A 6A Fuse -F6 Fails Open Circuit	IEEE-500, 3.51, Fuses up to 1000V
208	CDA-FUS-LF-F7	1.00E-08	2.00E-08	1	CDP A 2A Fuse -F7 Fails Open Circuit	IEEE-500, 3.51, Fuses up to 1000V
209	CDA-FUS-LF-F8	1.00E-08	2.00E-08	1	CDP A 2A Fuse -F8 Fails Open Circuit	IEEE-500, 3.51, Fuses up to 1000V
210	CDA-FUS-LF-F9	1.00E-08	2.00E-08	1	Fuse -F9 Fails Open Circuit	IEEE-500, 3.51, Fuses up to 1000V
211	CDA-MOD-LF-A3	5.00E-04	1.00E-03	1	CDP A Modem -A3 Fails to Function	Estimate
212	CDA-MOD-LF-A31	5.00E-04	1.00E-03	1	CDP A Modem -A31 Fails to Function	Estimate
213	CDA-OLM-LF-U2	1.00E-04	NA	NA	CDP A Optical Link Module OLM -U2 Fails to Operate	Estimate
214	CDA-OLM-LF-U3	1.00E-04	NA	NA	CDP A Optical Link Module OLM -U3 Fails to Operate	Estimate

Confidential Treatment Requested by Transocean Holdings LLC TRN-HCEC-00056788

Table B-1: Basic Event Data (continued)

No.	Identifier	UA	Lambda	Tau	Description	Basis
215	CDA-OLM-LF-U5	1.00E-04	NA	NA	CDP A Optical Link Module OLM -U5 Fails to Operate	Estimate
216	CDA-PSP-LF-G2	1.45E-05	2.90E-05	1	CDP A Power Supply Board -G2 Fails	Power Supply, OREDA-92, 5.5.2
217	CDA-PSP-LF-G3	1.45E-05	2.90E-05	1	CDP A Power Supply Board -G3 Fails	Power Supply, OREDA-92, 5.5.2
218	CDA-SWT-LF-K2	3.45E-07	6.90E-07	1	CDP A Switch -K2 Fails	IEEE-500, 8.22.15
219	CDA-SWT-LF-K3	3.45E-07	6.90E-07	1	CDP A Switch -K3 Fails	IEEE-500, 8.22.15
220	CDA-SWT-LF-K5	3.45E-07	6.90E-07	1	CDP A Switch -K5 Fails	IEEE-500, 8.22.15
221	CDA-SWT-LF-K6	3.45E-07	6.90E-07	1	CDP A Switch -K6 Fails	IEEE-500, 8.22.15
222	CDA-XFM-LF-T1	1.45E-06	2.90E-06	1	CDP A Transformer -T1 Fails	OREDA-92, 4.2.1.1, Transformers 221V-440V
223	CDA-XFM-LF-T2	1.45E-06	2.90E-06	1	CDP A Transformer -T2 Fails	OREDA-92, 4.2.1.1, Transformers 221V-440V
224	CDB-BKR-LF-Q1	8.00E-07	1.60E-06	1	Breaker -Q1 Fails to Remain Closed	Breaker spurious ops, OREDA-92, 4.2.6.1
225	CDB-BKR-LF-Q4	8.00E-07	1.60E-06	1	CDP B Breaker -Q4 Fails	Breaker spurious ops, OREDA-92, 4.2.6.1
226	CDB-BKR-LF-Q5	8.00E-07	1.60E-06	1	CDP B Breaker -Q5 Fails	Breaker spurious ops, OREDA-92, 4.2.6.1
227	CDB-BKR-LF-Q7	8.00E-07	1.60E-06	1	CDP B Breaker -Q7 Fails	Breaker spurious ops, OREDA-92, 4.2.6.1
228	CDB-BRD-LF-A1	1.59E-05	3.18E-05	1	Failure of CXM/FISO Isolation Board -A1	Input/Output Boards, OREDA-97, 4.1 abn. out+flo+part unknown
229	CDB-BRD-LF-A4	1.59E-05	3.18E-05	1	Failure of CXM/FISO Isolation Board -A4	Input/Output Boards, OREDA-97, 4.1 abn. out+flo+part unknown
230	CDB-BUS-LF-PROFI	1.00E-05	NA	NA	CDP B Profibus B Fails	Estimate
231	CDB-BUS-LF-VME-B	1.00E-05	NA	NA	CDP B VME Bus Fails To Pass Signal	Estimate
232	CDB-CPU-LF-A2	1.31E-06	2.62E-06	1	CDP B CPU -A2 Fails To Process Signal	CPU Boards, OREDA-97, 4.1 abn. out+flo+part unknown
233	CDB-CPU-LF-A5	1.31E-06	2.62E-06	1	CDP B CPU -A5 Fails To Process Signal	CPU Boards, OREDA-97, 4.1 abn. out+flo+part unknown
234	CDB-FUS-LF-F10	1.00E-08	2.00E-08	1	Fuse -F10 Fails Open Circuit	IEEE-500, 3.51, Fuses up to 1000V
235	CDB-FUS-LF-F11	1.00E-08	2.00E-08	1	CDP B 6A Fuse -F11 Fails Open Circuit	IEEE-500, 3.51, Fuses up to 1000V
236	CDB-FUS-LF-F12	1.00E-08	2.00E-08	1	CDP B 6A Fuse -F12 Fails Open Circuit	IEEE-500, 3.51, Fuses up to 1000V
237	CDB-FUS-LF-F13	1.00E-08	2.00E-08	1	CDP B 2A Fuse -F13 Fails Open Circuit	IEEE-500, 3.51, Fuses up to 1000V
238	CDB-FUS-LF-F14	1.00E-08	2.00E-08	1	CDP B 2A Fuse -F14 Fails Open Circuit	IEEE-500, 3.51, Fuses up to 1000V
239	CDB-FUS-LF-F15	1.00E-08	2.00E-08	1	Fuse -F15 Fails Open Circuit	IEEE-500, 3.51, Fuses up to 1000V
240	CDB-FUS-LF-F16	1.00E-08	2.00E-08	1	Fuse -F16 Fails Open Circuit	IEEE-500, 3.51, Fuses up to 1000V
241	CDB-FUS-LF-F5	1.00E-08	2.00E-08	1	CDP B 6A Fuse -F5 Fails Open Circuit	IEEE-500, 3.51, Fuses up to 1000V
242	CDB-FUS-LF-F6	1.00E-08	2.00E-08	1	CDP B 6A Fuse -F6 Fails Open Circuit	IEEE-500, 3.51, Fuses up to 1000V
243	CDB-FUS-LF-F7	1.00E-08	2.00E-08	1	CDP B 2A Fuse -F7 Fails Open Circuit	IEEE-500, 3.51, Fuses up to 1000V
244	CDB-FUS-LF-F8	1.00E-08	2.00E-08	1	CDP B 2A Fuse -F8 Fails Open Circuit	IEEE-500, 3.51, Fuses up to 1000V
245	CDB-FUS-LF-F9	1.00E-08	2.00E-08	1	Fuse -F9 Fails Open Circuit	IEEE-500, 3.51, Fuses up to 1000V
246	CDB-MOD-LF-A3	5.00E-04	1.00E-03	1	CDP B Modem -A3 Fails to Function	Estimate
247	CDB-MOD-LF-A31	5.00E-04	1.00E-03	1	CDP B Modem -A31 Fails to Function	Estimate
248	CDB-OLM-LF-U2	1.00E-04	NA	NA	CDP B Optical Link Module OLM -U2 Fails to Operate	Estimate
249	CDB-OLM-LF-U3	1.00E-04	NA	NA	CDP B Optical Link Module OLM -U3 Fails to Operate	Estimate
250	CDB-OLM-LF-U5	1.00E-04	NA	NA	CDP B Optical Link Module OLM -U5 Fails to Operate	Estimate

Confidential Treatment Requested by Transocean Holdings LLC TRN-HCEC-00056789

Table B-1: Basic Event Data (continued)

No.	Identifier	UA	Lambda	Tau	Description	Basis
251	CDB-PSP-LF-G2	1.45E-05	2.90E-05	1	CDP B Power Supply Board -G2 Fails	Power Supply, OREDA-92, 5.5.2
252	CDB-PSP-LF-G3	1.45E-05	2.90E-05	1	CDP B Power Supply Board -G3 Fails	Power Supply, OREDA-92, 5.5.2
253	CDB-SWT-LF-K2	3.45E-07	6.90E-07	1	CDP B Switch -K2 Fails	IEEE-500, 8.22.15
254	CDB-SWT-LF-K3	3.45E-07	6.90E-07	1	CDP B Switch -K3 Fails	IEEE-500, 8.22.15
255	CDB-SWT-LF-K5	3.45E-07	6.90E-07	1	CDP B Switch -K5 Fails	IEEE-500, 8.22.15
256	CDB-SWT-LF-K6	3.45E-07	6.90E-07	1	CDP B Switch -K6 Fails	IEEE-500, 8.22.15
257	CDB-XFM-LF-T1	1.45E-06	2.90E-06	1	CDP B Transformer -T1 Fails	OREDA-92, 4.2.1.1, Transformers 221V-440V
258	CDB-XFM-LF-T2	1.45E-06	2.90E-06	1	CDP B Transformer -T2 Fails	OREDA-92, 4.2.1.1, Transformers 221V-440V
259	CDP-SOF-LF-ERROR	1.97E-06	3.94E-06	1	Control/Power Dist. Panel Software Error	OREDA-97, 4.1, Sys/Application Software, ABO/FTO
260	CWS-DIO-LF-V1	1.00E-08	2.00E-08	1	CWS Diode -V1 Fails	Estimate
261	CWS-DIO-LF-V2	1.00E-08	2.00E-08	1	CWS Diode -V2 Fails	Estimate
262	CWS-FUS-LF-F1	1.00E-08	2.00E-08	1	CWS Fuse -F1 Fails	IEEE-500, 3.51, Fuses up to 1000V
263	CWS-FUS-LF-F10	1.00E-08	2.00E-08	1	CWS Fuse -F10 Fails	IEEE-500, 3.51, Fuses up to 1000V
264	CWS-FUS-LF-F2	1.00E-08	2.00E-08	1	CWS Fuse -F2 Fails	IEEE-500, 3.51, Fuses up to 1000V
265	CWS-FUS-LF-F7	1.00E-08	2.00E-08	1	CWS Fuse -F7 Fails	IEEE-500, 3.51, Fuses up to 1000V
266	CWS-FUS-LF-F8	1.00E-08	2.00E-08	1	CWS Fuse -F8 Fails	IEEE-500, 3.51, Fuses up to 1000V
267	CWS-FUS-LF-F9	1.00E-08	2.00E-08	1	CWS Fuse -F9 Fails	IEEE-500, 3.51, Fuses up to 1000V
268	CWS-OLM-LF-U1	1.00E-04	NA	NA	CWS Optical Link Module -U1 Fails	Estimate
269	CWS-OLM-LF-U2	1.00E-04	NA	NA	CWS Optical Link Module -U2 Fails	Estimate
270	CWS-PSP-LF-G1	1.45E-05	2.90E-05	1	CWS Power Supply -G1 Fails	Power Supply, OREDA-92, 5.5.2
271	CWS-PSP-LF-G2	1.45E-05	2.90E-05	1	CWS Power Supply -G2 Fails	Power Supply, OREDA-92, 5.5.2
272	CWS-SCR-LF-PANEL	5.00E-05	1.00E-04	1	CCU Workstation Fails to Pass Signals	Estimate
273	CWS-SOF-LF-ERROR	1.97E-06	3.94E-06	1	CCU Workstation Software Error	OREDA-97, 4.1, Sys/Application Software, ABO/FTO
274	CWS-XHE-FO-ENABL	3.00E-03	NA	NA	CWS Operator Fails to Use Enable	Basic Human Error Probability
275	CWS-XHE-FR-MANED	9.50E-01	NA	NA	CCU Workstation Manned	Estimate
276	CWS-XHE-FR-UNMAN	5.00E-02	NA	NA	CCU Workstation Unmanned	Estimate
277	DP-BKR-LF-Q1	8.00E-07	1.60E-06	1	DP Breaker -Q1 Fails	Breaker spurious ops, OREDA-92, 4.2.6.1
278	DP-BKR-LF-Q2	8.00E-07	1.60E-06	1	DP Breaker -Q2 Fails	Breaker spurious ops, OREDA-92, 4.2.6.1
279	DP-BKR-LF-Q3	8.00E-07	1.60E-06	1	DP Breaker -Q3 Fails	Breaker spurious ops, OREDA-92, 4.2.6.1
280	DP-BKR-LF-Q4	8.00E-07	1.60E-06	1	DP Breaker -Q4 Fails	Breaker spurious ops, OREDA-92, 4.2.6.1
281	DP-BRD-LF-A1	1.59E-05	3.18E-05	1	DP CXM/FISO Board -A1 Fails	Input/Output Boards, OREDA-97, 4.1 abn. out+flo+part unknown
282	DP-BRD-LF-A3	1.59E-05	3.18E-05	1	DP Carrier Board -A3 Fails	Input/Output Boards, OREDA-97, 4.1 abn. out+flo+part unknown
283	DP-BRD-LF-A33	1.59E-05	3.18E-05	1	DP Carrier Board -A33 Fails	Input/Output Boards, OREDA-97, 4.1 abn. out+flo+part unknown
284	DP-BRD-LF-A35	1.59E-05	3.18E-05	1	DP Piggyback Board -A35 Fails	Input/Output Boards, OREDA-97, 4.1 abn. out+flo+part unknown
285	DP-BRD-LF-A4	1.59E-05	3.18E-05	1	DP Piggyback Board -A4 Fails	Input/Output Boards, OREDA-97, 4.1 abn. out+flo+part unknown
286	DP-BRD-LF-A48	1.59E-05	3.18E-05	1	DP CXM/FISO Board -A48 Fails	Input/Output Boards, OREDA-97, 4.1 abn. out+flo+part unknown

Confidential Treatment Requested by Transocean Holdings LLC

TRN-HCEC-00056790

Table B-1: Basic Event Data (continued)

No.	Identifier	UA	Lambda	Tau	Description	Basis
287	DP-BRD-LF-A5	1.59E-05	3.18E-05	1	DP Piggyback Board -A5 Fails	Input/Output Boards, OREDA-97, 4.1 abn. out+flo+part unknown
288	DP-BRD-LF-A50	1.59E-05	3.18E-05	1	DP Carrier Board -A50 Fails	Input/Output Boards, OREDA-97, 4.1 abn. out+flo+part unknown
289	DP-BRD-LF-A51	1.59E-05	3.18E-05	1	DP Piggyback Board -A51 Fails	Input/Output Boards, OREDA-97, 4.1 abn. out+flo+part unknown
290	DP-BRD-LF-A52	1.59E-05	3.18E-05	1	DP Piggyback Board -A52 Fails	Input/Output Boards, OREDA-97, 4.1 abn. out+flo+part unknown
291	DP-BRD-LF-A80	1.59E-05	3.18E-05	1	DP Carrier Board -A80 Fails	Input/Output Boards, OREDA-97, 4.1 abn. out+flo+part unknown
292	DP-BRD-LF-A82	1.59E-05	3.18E-05	1	DP Piggyback Board -A82 Fails	Input/Output Boards, OREDA-97, 4.1 abn. out+flo+part unknown
293	DP-BUS-LF-VMEA	1.00E-05	NA	NA	DP VME Bus A Fails	Estimate
294	DP-BUS-LF-VMEB	1.00E-05	NA	NA	DP VME Bus B Fails	Estimate
295	DP-CPU-LF-A2	1.31E-06	2.62E-06	1	DP CPU Board -A2 Fails	CPU Boards, OREDA-97, 4.1 abn. out+flo+part unknown
296	DP-CPU-LF-A49	1.31E-06	2.62E-06	1	DP CPU Board -A49 Fails	CPU Boards, OREDA-97, 4.1 abn. out+flo+part unknown
297	DP-DIO-LF-V1	1.00E-08	2.00E-08	1	DP Diode -V1 Fails	Estimate
298	DP-DIO-LF-V2	1.00E-08	2.00E-08	1	DP Diode -V2 Fails	Estimate
299	DP-FUS-LF-F1	1.00E-08	2.00E-08	1	DP Fuse -F1 Fails	IEEE-500, 3.51, Fuses up to 1000V
300	DP-FUS-LF-F13	1.00E-08	2.00E-08	1	DP Fuse -F13 Fails	IEEE-500, 3.51, Fuses up to 1000V
301	DP-FUS-LF-F14	1.00E-08	2.00E-08	1	DP Fuse -F14 Fails	IEEE-500, 3.51, Fuses up to 1000V
302	DP-FUS-LF-F15	1.00E-08	2.00E-08	1	DP Fuse -F15 Fails	IEEE-500, 3.51, Fuses up to 1000V
303	DP-FUS-LF-F18	1.00E-08	2.00E-08	1	DP Fuse -F18 Fails	IEEE-500, 3.51, Fuses up to 1000V
304	DP-FUS-LF-F19	1.00E-08	2.00E-08	1	DP Fuse -F19 Fails	IEEE-500, 3.51, Fuses up to 1000V
305	DP-FUS-LF-F2	1.00E-08	2.00E-08	1	DP Fuse -F2 Fails	IEEE-500, 3.51, Fuses up to 1000V
306	DP-FUS-LF-F3	1.00E-08	2.00E-08	1	DP Fuse -F3 Fails	IEEE-500, 3.51, Fuses up to 1000V
307	DP-FUS-LF-F6	1.00E-08	2.00E-08	1	DP Fuse -F6 Fails	IEEE-500, 3.51, Fuses up to 1000V
308	DP-FUS-LF-F7	1.00E-08	2.00E-08	1	DP Fuse -F7 Fails	IEEE-500, 3.51, Fuses up to 1000V
309	DP-OLM-LF-U1	1.00E-04	NA	NA	DP Optical Link Module -U1 Fails	Estimate
310	DP-OLM-LF-U2	1.00E-04	NA	NA	DP Optical Link Module -U1 Fails	Estimate
311	DP-PSP-LF-G1	1.45E-05	2.90E-05	1	DP Power Supply -G1 Fails	Power Supply, OREDA-92, 5.5.2
312	DP-PSP-LF-G2	1.45E-05	2.90E-05	1	DP Power Supply -G2 Fails	Power Supply, OREDA-92, 5.5.2
313	DP-PSP-LF-G4	1.45E-05	2.90E-05	1	DP Power Supply -G4 Fails	Power Supply, OREDA-92, 5.5.2
314	DP-PSP-LF-G5	1.45E-05	2.90E-05	1	DP Power Supply -G5 Fails	Power Supply, OREDA-92, 5.5.2
315	DP-SWT-LF-BCS	1.74E-04	6.90E-07	504	DP Switch Fails to Operate For Open Blue Conduit Supply	IEEE-500, 8.22.15
316	DP-SWT-LF-BHLS	1.74E-04	6.90E-07	504	DP Switch Fails to Operate For Open Blue HL Supply	IEEE-500, 8.22.15
317	DP-SWT-LF-CHP	8.28E-06	6.90E-07	24	DP Switch Fails to Operate For HP Close CSR	IEEE-500, 8.22.15
318	DP-SWT-LF-CLIC	8.28E-06	6.90E-07	24	DP Switch Fails to Operate For Close LIC	IEEE-500, 8.22.15
319	DP-SWT-LF-CLIK	8.28E-06	6.90E-07	24	DP Switch Fails to Operate For Close LIK	IEEE-500, 8.22.15
320	DP-SWT-LF-CLOC	8.28E-06	6.90E-07	24	DP Switch Fails to Operate For Close LOC	IEEE-500, 8.22.15
321	DP-SWT-LF-CLOK	8.28E-06	6.90E-07	24	DP Switch Fails to Operate For Close LOK	IEEE-500, 8.22.15
322	DP-SWT-LF-CSR	8.28E-06	6.90E-07	24	DP Switch Fails to Operate For Close CSR	IEEE-500, 8.22.15

Confidential Treatment Requested by Transocean Holdings LLC

TRN-HCEC-00056791

Table B-1: Basic Event Data (continued)

No.	Identifier	UA	Lambda	Tau	Description	Basis
323	DP-SWT-LF-CUIC	8.28E-06	6.90E-07	24	DP Switch Fails to Operate For Close UIC	IEEE-500, 8.22.15
324	DP-SWT-LF-CUIK	8.28E-06	6.90E-07	24	DP Switch Fails to Operate For Close UIK	IEEE-500, 8.22.15
325	DP-SWT-LF-CUOC	8.28E-06	6.90E-07	24	DP Switch Fails to Operate For Close UOC	IEEE-500, 8.22.15
326	DP-SWT-LF-CUOK	8.28E-06	6.90E-07	24	DP Switch Fails to Operate For Close UOK	IEEE-500, 8.22.15
327	DP-SWT-LF-EDS	3.45E-04	6.90E-07	1000	DP Switch Fails to Operate For EDS	IEEE-500, 8.22.15
328	DP-SWT-LF-LAC	1.74E-04	6.90E-07	504	DP Switch Fails to Operate For Close LA	IEEE-500, 8.22.15
329	DP-SWT-LF-LPR	1.74E-04	6.90E-07	504	DP Switch Fails to Operate For Close LPR	IEEE-500, 8.22.15
330	DP-SWT-LF-MPR	1.74E-04	6.90E-07	504	DP Switch Fails to Operate For Close MPR	IEEE-500, 8.22.15
331	DP-SWT-LF-OLIC	8.28E-06	6.90E-07	24	DP Switch Fails to Operate For Open LIC	IEEE-500, 8.22.15
332	DP-SWT-LF-OLIK	8.28E-06	6.90E-07	24	DP Switch Fails to Operate For Open LIK	IEEE-500, 8.22.15
333	DP-SWT-LF-OLOC	8.28E-06	6.90E-07	24	DP Switch Fails to Operate For Open LOC	IEEE-500, 8.22.15
334	DP-SWT-LF-OLOK	8.28E-06	6.90E-07	24	DP Switch Fails to Operate For Open LOK	IEEE-500, 8.22.15
335	DP-SWT-LF-OUIC	8.28E-06	6.90E-07	24	DP Switch Fails to Operate For Open UIC	IEEE-500, 8.22.15
336	DP-SWT-LF-OUIK	8.28E-06	6.90E-07	24	DP Switch Fails to Operate For Open UIK	IEEE-500, 8.22.15
337	DP-SWT-LF-OUOC	8.28E-06	6.90E-07	24	DP Switch Fails to Operate For Open UOC	IEEE-500, 8.22.15
338	DP-SWT-LF-OUOK	8.28E-06	6.90E-07	24	DP Switch Fails to Operate For Open UOK	IEEE-500, 8.22.15
339	DP-SWT-LF-PD	3.45E-04	6.90E-07	1000	DP Switch Fails to Operate For LMRP Pri. Dis.	IEEE-500, 8.22.15
340	DP-SWT-LF-PSEL	1.74E-04	6.90E-07	504	DP Switch Fails to Operate For Pod Select	IEEE-500, 8.22.15
341	DP-SWT-LF-S241	8.28E-06	6.90E-07	24	DP Enable Switch Fails to Operate	IEEE-500, 8.22.15
342	DP-SWT-LF-S242	8.28E-06	6.90E-07	24	DP Enable Switch Fails to Operate	IEEE-500, 8.22.15
343	DP-SWT-LF-SD	3.45E-04	6.90E-07	1000	DP Switch Fails to Operate For LMRP Sec. Dis.	IEEE-500, 8.22.15
344	DP-SWT-LF-UAC	1.74E-04	6.90E-07	504	DP Switch Fails to Operate For Close UA	IEEE-500, 8.22.15
345	DP-SWT-LF-UHP	1.74E-04	6.90E-07	504	DP Switch Fails to Operate For HP Close USR	IEEE-500, 8.22.15
346	DP-SWT-LF-UPR	1.74E-04	6.90E-07	504	DP Switch Fails to Operate For Close UPR	IEEE-500, 8.22.15
347	DP-SWT-LF-USR	1.74E-04	6.90E-07	504	DP Switch Fails to Operate For Close USR	IEEE-500, 8.22.15
348	DP-SWT-LF-YCS	1.74E-04	6.90E-07	504	DP Switch Fails to Operate For Open Yellow Conduit Supply	IEEE-500, 8.22.15
349	DP-SWT-LF-YHLS	1.74E-04	6.90E-07	504	DP Switch Fails to Operate For Open Yellow HL Supply	IEEE-500, 8.22.15
350	DP-XHE-FO-ENABL	3.00E-03	NA	NA	DP Operator Fails to Use Enable	Basic Human Error Probability
351	DP-XHE-FR-MANED	9.50E-01	NA	NA	Driller's Control Panel Manned	Estimate
352	DP-XHE-FR-UNMAN	5.00E-02	NA	NA	Driller's Control Panel Unmanned	Estimate
353	EHY-ACC-PB-INNER	1.92E-05	1.60E-06	24	Loss of Integrity of Inner Valve Accumulator	OREDA-92, 5.3.1, Ruptured pressure lines/accumulators
354	EHY-ACC-PB-OUTER	1.92E-05	1.60E-06	24	Loss of Integrity of Outer Valve Accumulator	OREDA-92, 5.3.1, Ruptured pressure lines/accumulators
355	EHY-ACC-PB-STACC	1.92E-05	1.60E-06	24	Loss of Integrity of Stack Accumulators	OREDA-92, 5.3.1, Ruptured pressure lines/accumulators
356	EHY-ACC-UA-INNER	1.00E-03	NA	NA	Inner Valve Acc. Insuff. Charged for Operation	Estimate
357	EHY-ACC-UA-OUTER	1.00E-03	NA	NA	Outer Valve Acc. Insuff. Charged for Operation	Estimate
358	EHY-ACC-UA-STACC	1.00E-03	NA	NA	Stack Accumulator Insufficiently Charged for Operation	Estimate

Confidential Treatment Requested by Transocean Holdings LLC

TRN-HCEC-00056792

Table B-1: Basic Event Data (continued)

No.	Identifier	UA	Lambda	Tau	Description	Basis
359	EHY-CDT-LF-HOT	5.72E-06	1.14E-05	1	No Hydraulic Pressure Available From Hot Line	OREDA-97, 5.1.2, Crit. Hyd. Conn/Line
360	EHY-CDT-LF-RIGID	5.72E-06	1.14E-05	1	Hydraulic Supply Not Available From Rigid Conduit	OREDA-97, 5.1.2, Crit. Hyd. Conn/Line
361	EHY-CHK-FC-STISO	2.50E-05	2.08E-06	24	Stack Acc. Isolation Check Valve Fails to Close	IEEE-500, 11.2.3, Composite, all
362	EHY-CHK-LF-BPHOT	2.50E-05	2.08E-06	24	Blue Hot Line Check Valve Fails to Allow Flow	IEEE-500, 11.2.3, Composite, all
363	EHY-CHK-LF-BPSUP	2.50E-05	2.08E-06	24	Blue Rigid Supply Check Valve Fails to Allow Flow	IEEE-500, 11.2.3, Composite, all
364	EHY-CHK-LF-HLSUP	2.50E-05	2.08E-06	24	Hot Line Supply Check Valve Fails to Allow Flow	IEEE-500, 11.2.3, Composite, all
365	EHY-CHK-LF-INNER	2.50E-05	2.08E-06	24	Inner Iso. Check Valve Fails to Allow Flow	IEEE-500, 11.2.3, Composite, all
366	EHY-CHK-LF-OUTER	2.50E-05	2.08E-06	24	Outer Iso. Check Valve Fails to Allow Flow	IEEE-500, 11.2.3, Composite, all
367	EHY-CHK-LF-RCSUP	1.75E-04	2.08E-06	168	Rigid Conduit Supply Check Valve Fails to Allow Flow	IEEE-500, 11.2.3, Composite, all
368	EHY-CHK-LF-YPHOT	1.75E-04	2.08E-06	168	Yellow Hot Line Check Valve Fails to Allow Flow	IEEE-500, 11.2.3, Composite, all
369	EHY-CHK-LF-YPSUP	1.75E-04	2.08E-06	168	Yellow Rigid Supply Check Valve Fails to Allow Flow	IEEE-500, 11.2.3, Composite, all
370	EHY-CKV-FC-LIC	3.85E-03	4.60E-05	168	Lower Inner Choke Valve Fails to Close on Demand	OREDA-92, 7.5.1.6, all modes
371	EHY-CKV-FC-LIK	3.85E-03	4.60E-05	168	Lower Inner Kill Valve Fails to Close on Demand	OREDA-92, 7.5.1.6, all modes
372	EHY-CKV-FC-LOC	3.85E-03	4.60E-05	168	Lower Outer Choke Valve Fails to Close on Demand	OREDA-92, 7.5.1.6, all modes
373	EHY-CKV-FC-LOK	3.85E-03	4.60E-05	168	Lower Outer Kill Valve Fails to Close on Demand	OREDA-92, 7.5.1.6, all modes
374	EHY-CKV-FC-UIC	3.85E-03	4.60E-05	168	Upper Inner Choke Valve Fails to Close on Demand	OREDA-92, 7.5.1.6, all modes
375	EHY-CKV-FC-UIK	3.85E-03	4.60E-05	168	Upper Inner Kill Valve Fails to Close on Demand	OREDA-92, 7.5.1.6, all modes
376	EHY-CKV-FC-UOC	3.85E-03	4.60E-05	168	Upper Outer Choke Valve Fails to Close on Demand	OREDA-92, 7.5.1.6, all modes
377	EHY-CKV-FC-UOK	3.85E-03	4.60E-05	168	Upper Outer Kill Valve Fails to Close on Demand	OREDA-92, 7.5.1.6, all modes
378	EHY-CKV-FO-LIC	3.85E-03	4.60E-05	168	LIC Valve Fails to Open on Demand	OREDA-92, 7.5.1.6, all modes
379	EHY-CKV-FO-LIK	3.85E-03	4.60E-05	168	LIK Valve Fails to Open on Demand	OREDA-92, 7.5.1.6, all modes
380	EHY-CKV-FO-LOC	3.85E-03	4.60E-05	168	LOC Valve Fails to Open on Demand	OREDA-92, 7.5.1.6, all modes
381	EHY-CKV-FO-LOK	3.85E-03	4.60E-05	168	LOK Valve Fails to Open on Demand	OREDA-92, 7.5.1.6, all modes
382	EHY-CKV-FO-UIC	3.85E-03	4.60E-05	168	UIC Valve Fails to Open on Demand	OREDA-92, 7.5.1.6, all modes
383	EHY-CKV-FO-UIK	3.85E-03	4.60E-05	168	UIK Valve Fails to Open on Demand	OREDA-92, 7.5.1.6, all modes
384	EHY-CKV-FO-UOC	3.85E-03	4.60E-05	168	UOC Valve Fails to Open on Demand	OREDA-92, 7.5.1.6, all modes
385	EHY-CKV-FO-UOK	3.85E-03	4.60E-05	168	UOK Valve Fails to Open on Demand	OREDA-92, 7.5.1.6, all modes
386	EHY-HOV-FO-BSRHP	2.79E-03	3.33E-05	168	HP Blind Shear Ram Supply HOV Fails to Open	OREDA-97, 4.4, body/internals, seat, seals, actuator
387	EHY-HOV-FO-CSRHP	2.79E-03	3.33E-05	168	HP Casing Shear Supply HOV Fails to Open	OREDA-97, 4.4, body/internals, seat, seals, actuator
388	EHY-HOV-FO-YPSUP	2.79E-03	3.33E-05	168	Yellow Pod Conduit Supply HOV Fails to Open	OREDA-97, 4.4, body/internals, seat, seals, actuator
389	EHY-HOV-LF-LICAL	2.79E-03	3.33E-05	168	LIC Alternate Close Supply HOV Fails to Function	OREDA-97, 4.4, body/internals, seat, seals, actuator
390	EHY-HOV-LF-LIKAL	2.79E-03	3.33E-05	168	LIK Alternate Close Supply HOV Fails to Function	OREDA-97, 4.4, body/internals, seat, seals, actuator
391	EHY-HOV-LF-LOCAL	2.79E-03	3.33E-05	168	LOC Alternate Close Supply HOV Fails to Function	OREDA-97, 4.4, body/internals, seat, seals, actuator
392	EHY-HOV-LF-LOKAL	2.79E-03	3.33E-05	168	LOK Alternate Close Supply HOV Fails to Function	OREDA-97, 4.4, body/internals, seat, seals, actuator
393	EHY-HOV-LF-UICAL	2.79E-03	3.33E-05	168	UIC Alternate Close Supply HOV Fails to Function	OREDA-97, 4.4, body/internals, seat, seals, actuator
394	EHY-HOV-LF-UIKAL	2.79E-03	3.33E-05	168	UIK Alternate Close Supply HOV Fails to Function	OREDA-97, 4.4, body/internals, seat, seals, actuator

Confidential Treatment Requested by Transocean Holdings LLC TRN-HCEC-00056793

Table B-1: Basic Event Data (continued)

No.	Identifier	UA	Lambda	Tau	Description	Basis
395	EHY-HOV-LF-UOCAL	2.79E-03	3.33E-05	168	UOC Alternate Close Supply HOV Fails to Function	OREDA-97, 4.4, body/internals, seat, seals, actuator
396	EHY-HOV-LF-UOKAL	2.79E-03	3.33E-05	168	UOK Alternate Close Supply HOV Fails to Function	OREDA-97, 4.4, body/internals, seat, seals, actuator
397	EHY-HOV-RO-BPSUP	1.13E-05	9.44E-07	24	Blue Pod Conduit Supply HOV Fails to Remain Open	OREDA-97, 4.4, Plug valve body/internals, seat,1.79% Total
398	EHY-HOV-SO-FLUSH	2.80E-05	2.33E-06	24	Conduit Flush Valve Fails to Remain Closed	OREDA-97, SPO=4.41%
399	EHY-HOV-SO-SDMP1	2.80E-05	2.33E-06	24	Spurious Opening of Subsea Acc. Dump HOV 1	OREDA-97, SPO=4.41%
400	EHY-HOV-SO-SDMP2	2.80E-05	2.33E-06	24	Spurious Opening of Subsea Acc. Dump HOV 2	OREDA-97, SPO=4.41%
401	EHY-PCV-LF-BPHL	2.80E-05	2.33E-06	24	Blue Hot Line Supply Piloted Check Valve Fails to Allow Flow	OREDA-97, SPO=4.41%
402	EHY-PCV-LF-BPSUP	2.80E-05	2.33E-06	24	Blue Rigid Supply Piloted Check Valve Fails to Allow Flow	OREDA-97, SPO=4.41%
403	EHY-PCV-LF-YPHL	2.80E-05	2.33E-06	24	Yell. Hot Line Supp. Piloted Check Valve Fails to Allow Flow	OREDA-97, SPO=4.41%
404	EHY-PCV-LF-YPSEL	2.80E-05	2.33E-06	24	Yellow Pod Piloted Check Valve Fails to Operate	OREDA-97, SPO=4.41%
405	EHY-PCV-LF-YPSUP	2.80E-05	2.33E-06	24	Yellow Rigid Supply Piloted Check Valve Fails to Allow Flow	OREDA-97, SPO=4.41%
406	EHY-PCV-SO-BPSEL	2.80E-05	2.33E-06	24	Blue Pod Piloted Check Valve Fails to Remain Open	OREDA-97, SPO=4.41%
407	EHY-PCV-SO-SDUMP	2.80E-05	2.33E-06	24	Spurious Opening of Stack Acc. Dump Piloted Check Valve	OREDA-97, SPO=4.41%
408	EHY-REG-LF-BSR	9.24E-06	1.10E-07	168	BSR Press. Reg. Fails to Provide Sufficient Pressure	IEEE-500, 8.25.6
409	EHY-REG-LF-CSR	1.32E-06	1.10E-07	24	CSR Pressure Reg. Fails to Provide Sufficient Pressure	IEEE-500, 8.25.6
410	EHY-REG-LF-INNER	1.32E-06	1.10E-07	24	Inner Valve Reg. Fails to Provide Sufficient Pressure	IEEE-500, 8.25.6
411	EHY-REG-LF-OUTER	1.32E-06	1.10E-07	24	Outer Valve Reg. Fails to Provide Sufficient Pressure	IEEE-500, 8.25.6
412	EHY-SHV-LF-BPHL	1.75E-04	2.08E-06	168	Blue Hot Line Supply Pilot Shuttle Valve Fails to Operate	IEEE-500, 11.2.3, Composite, all
413	EHY-SHV-LF-BPSUP	1.75E-04	2.08E-06	168	Blue Rigid Supply Pilot Shuttle Valve Fails to Function	IEEE-500, 11.2.3, Composite, all
414	EHY-SHV-LF-CHPSR	1.75E-04	2.08E-06	168	CHP Shear B/Y Supp. Shuttle Valve Fails to Operate	IEEE-500, 11.2.3, Composite, all
415	EHY-SHV-LF-CLIC	1.75E-04	2.08E-06	168	LIC Final Close Shuttle Valve Fails to Function	IEEE-500, 11.2.3, Composite, all
416	EHY-SHV-LF-CLIK	1.75E-04	2.08E-06	168	LIK Final Close Shuttle Valve Fails to Function	IEEE-500, 11.2.3, Composite, all
417	EHY-SHV-LF-CLOC	1.75E-04	2.08E-06	168	LOC Final Close Shuttle Valve Fails to Function	IEEE-500, 11.2.3, Composite, all
418	EHY-SHV-LF-CLOK	1.75E-04	2.08E-06	168	LOK Final Close Shuttle Valve Fails to Function	IEEE-500, 11.2.3, Composite, all
419	EHY-SHV-LF-CSR-F	1.75E-04	2.08E-06	168	Casing Shear Ram Final Shuttle Valve Fails to Operate	IEEE-500, 11.2.3, Composite, all
420	EHY-SHV-LF-CSRNR	1.75E-04	2.08E-06	168	Casing Shear Ram B/Y Supply Shuttle Valve Fails to Operate	IEEE-500, 11.2.3, Composite, all
421	EHY-SHV-LF-CUIC	1.75E-04	2.08E-06	168	UIC Final Close Shuttle Valve Fails to Function	IEEE-500, 11.2.3, Composite, all
422	EHY-SHV-LF-CUIK	1.75E-04	2.08E-06	168	UIK Final Close Shuttle Valve Fails to Function	IEEE-500, 11.2.3, Composite, all
423	EHY-SHV-LF-CUOC	1.75E-04	2.08E-06	168	UOC Final Close Shuttle Valve Fails to Function	IEEE-500, 11.2.3, Composite, all
424	EHY-SHV-LF-CUOK	1.75E-04	2.08E-06	168	UOK Final Close Shuttle Valve Fails to Function	IEEE-500, 11.2.3, Composite, all
425	EHY-SHV-LF-LAC	1.75E-04	2.08E-06	168	LA Close B/Y Supply Shuttle Valve FTO	IEEE-500, 11.2.3, Composite, all
426	EHY-SHV-LF-LIC-O	1.75E-04	2.08E-06	168	B/Y Open LIC Shuttle Valve Fails to Function	IEEE-500, 11.2.3, Composite, all
427	EHY-SHV-LF-LIK-O	1.75E-04	2.08E-06	168	B/Y Open LIK Shuttle Valve Fails to Function	IEEE-500, 11.2.3, Composite, all
428	EHY-SHV-LF-LOC-O	1.75E-04	2.08E-06	168	B/Y Open LOC Shuttle Valve Fails to Function	IEEE-500, 11.2.3, Composite, all
429	EHY-SHV-LF-LOK-O	1.75E-04	2.08E-06	168	B/Y Open LOK Shuttle Valve Fails to Function	IEEE-500, 11.2.3, Composite, all
430	EHY-SHV-LF-LPR-R	1.75E-04	2.08E-06	168	Lower Pipe Ram B/Y Supply Shuttle Valve Fails to Operate	IEEE-500, 11.2.3, Composite, all

Confidential Treatment Requested by Transocean Holdings LLC TRN-HCEC-00056794

Table B-1: Basic Event Data (continued)

No.	Identifier	UA	Lambda	Tau	Description	Basis
431	EHY-SHV-LF-MPR-R	1.75E-04	2.08E-06	168	Middle Pipe Ram B/Y Supply Shuttle Valve Fails to Operate	IEEE-500, 11.2.3, Composite, all
432	EHY-SHV-LF-OLIC-R	1.75E-04	2.08E-06	168	Open LIC B/Y Shuttle Valve Fails to Operate	IEEE-500, 11.2.3, Composite, all
433	EHY-SHV-LF-OLIK-R	1.75E-04	2.08E-06	168	Open LIK B/Y Shuttle Valve Fails to Operate	IEEE-500, 11.2.3, Composite, all
434	EHY-SHV-LF-OLOC-R	1.75E-04	2.08E-06	168	Open LOC B/Y Shuttle Valve Fails to Operate	IEEE-500, 11.2.3, Composite, all
435	EHY-SHV-LF-OLOK-R	1.75E-04	2.08E-06	168	Open LOK B/Y Shuttle Valve Fails to Operate	IEEE-500, 11.2.3, Composite, all
436	EHY-SHV-LF-OUIC-R	1.75E-04	2.08E-06	168	Open UIC B/Y Shuttle Valve Fails to Operate	IEEE-500, 11.2.3, Composite, all
437	EHY-SHV-LF-OUIK-R	1.75E-04	2.08E-06	168	Open UIK B/Y Shuttle Valve Fails to Operate	IEEE-500, 11.2.3, Composite, all
438	EHY-SHV-LF-OUOC-R	1.75E-04	2.08E-06	168	Open UOC B/Y Shuttle Valve Fails to Operate	IEEE-500, 11.2.3, Composite, all
439	EHY-SHV-LF-OUOK-R	1.75E-04	2.08E-06	168	Open UOK B/Y Shuttle Valve Fails to Operate	IEEE-500, 11.2.3, Composite, all
440	EHY-SHV-LF-PDIS1	1.04E-03	2.08E-06	1000	LMRP Disconnect First Shuttle Valve Fails to Operate	IEEE-500, 11.2.3, Composite, all
441	EHY-SHV-LF-PDIS2	1.04E-03	2.08E-06	1000	LMRP Disconnect Second Shuttle Vlv Fails to Operate	IEEE-500, 11.2.3, Composite, all
442	EHY-SHV-LF-PDISR	1.04E-03	2.08E-06	1000	LMRP Disconnect B/Y Supply Shuttle Valve Fails to Operate	IEEE-500, 11.2.3, Composite, all
443	EHY-SHV-LF-SDIS1	1.04E-03	2.08E-06	1000	LMRP Disconnect First Shuttle Valve Fails to Operate	IEEE-500, 11.2.3, Composite, all
444	EHY-SHV-LF-SDIS2	1.04E-03	2.08E-06	1000	LMRP Disconnect Second Shuttle Vlv Fails to Operate	IEEE-500, 11.2.3, Composite, all
445	EHY-SHV-LF-SDISR	1.04E-03	2.08E-06	1000	LMRP Disconn. B/Y Supply Shuttle Vlv Fails to Operate	IEEE-500, 11.2.3, Composite, all
446	EHY-SHV-LF-UAC	1.75E-04	2.08E-06	168	UA Close B/Y Supply Shuttle Valve FTO	IEEE-500, 11.2.3, Composite, all
447	EHY-SHV-LF-UHPSR	1.75E-04	2.08E-06	168	UHP Shear B/Y Supp. Shuttle Valve Fails to Operate	IEEE-500, 11.2.3, Composite, all
448	EHY-SHV-LF-UIC-O	1.75E-04	2.08E-06	168	B/Y Open UIC Shuttle Valve Fails to Function	IEEE-500, 11.2.3, Composite, all
449	EHY-SHV-LF-UIK-O	1.75E-04	2.08E-06	168	B/Y Open UIK Shuttle Valve Fails to Function	IEEE-500, 11.2.3, Composite, all
450	EHY-SHV-LF-UOC-O	1.75E-04	2.08E-06	168	B/Y Open UOC Shuttle Valve Fails to Function	IEEE-500, 11.2.3, Composite, all
451	EHY-SHV-LF-UOK-O	1.75E-04	2.08E-06	168	B/Y Open UOK Shuttle Valve Fails to Function	IEEE-500, 11.2.3, Composite, all
452	EHY-SHV-LF-UPR-R	1.75E-04	2.08E-06	168	Upper Pipe Ram B/Y Supply Shuttle Valve Fails to Operate	IEEE-500, 11.2.3, Composite, all
453	EHY-SHV-LF-USR-F	1.75E-04	2.08E-06	168	Blind Shear Ram Final Shuttle Valve Fails to Operate	IEEE-500, 11.2.3, Composite, all
454	EHY-SHV-LF-USRNR	1.75E-04	2.08E-06	168	Blind Shear Ram B/Y Supply Shuttle Valve Fails to Operate	IEEE-500, 11.2.3, Composite, all
455	EHY-SHV-LF-YPHL	1.75E-04	2.08E-06	168	Yell. Hot Line Supp. Pilot Shuttle Valve Fails to Operate	IEEE-500, 11.2.3, Composite, all
456	EHY-SHV-LF-YPSUP	1.75E-04	2.08E-06	168	Yellow Rigid Supply Pilot Shuttle Valve Fails to Function	IEEE-500, 11.2.3, Composite, all
457	EHY-SOV-LF-YPSELB	8.65E-04	1.03E-05	168	Yellow Pod Select Blue Pilot Valve Fails to Open	OREDA-97, 4.4, Act. Device, control unit, others, unknown
458	EHY-SOV-LF-YPSELY	8.65E-04	1.03E-05	168	Yellow Pod Select Yellow Pilot Valve Fails to Open	OREDA-97, 4.4, Act. Device, control unit, others, unknown
459	EHY-SOV-RO-BPSELB	1.24E-04	1.03E-05	24	Blue Pod Sel. Blue Pilot Valve Fails to Remain Open	OREDA-97, 4.4, Act. Device, control unit, others, unknown
460	INDICATE-EDS	1.00E-05	NA	NA	No Indication of Need to Initiate EDS	Estimate
461	INDICATE-WC	1.00E-05	NA	NA	No Indication of Well Control Situation	Estimate
462	OPR-SOF-LF-ERROR	1.97E-06	3.94E-06	1	CP Panel Software Error	OREDA-97, 4.1, Sys/Application Software, ABO/FTO
463	OPR-XHE-FO-EDS	1.00E-05	NA	NA	Operators Fail to Initiate EDS	Estimate
464	OPR-XHE-FO-WELLC	5.00E-05	NA	NA	Operator Fails to Perform Well Control Operations	Estimate
465	OPR-XHE-FR-CWSA	1.00E-02	NA	NA	Operator Fails to Respond to CWS Alarm - Unmanned	Estimate
466	OPR-XHE-FR-CWSM	3.00E-03	NA	NA	Operator Fails to Respond to CWS Alarm - Manned	Basic Human Error Probability

Confidential Treatment Requested by Transocean Holdings LLC

TRN-HCEC-00056795

Table B-1: Basic Event Data (continued)

No.	Identifier	UA	Lambda	Tau	Description	Basis
467	OPR-XHE-FR-DP-A	1.00E-02	NA	NA	Operator Fails to Respond to DP Alarm - Unmanned	Estimate
468	OPR-XHE-FR-DP-M	3.00E-03	NA	NA	Operator Fails to Respond to DP Alarm - Manned	Basic Human Error Probability
469	OPR-XHE-FR-TPP-A	1.00E-02	NA	NA	Operator Fails to Respond to TPP Alarm - Unmanned	Estimate
470	OPR-XHE-FR-TPP-M	3.00E-03	NA	NA	Operator Fails to Respond to TPP Alarm - Manned	Basic Human Error Probability
471	OPR-XHE-FT-YPOD	3.00E-03	NA	NA	Operator Fails to Switch to Standby Pod	Basic Human Error Probability
472	POD-RAM-LF-CASNG	5.00E-02	NA	NA	Casing Present or Other Conditions Req. Casing Shear Ram	Estimate
473	POD-SOF-LF-ERROR	1.97E-06	3.94E-06	1	Pod Software Error	OREDA-97, 4.1, Sys/Application Software, ABO/FTO
474	TPP-BKR-LF-Q1	8.00E-07	1.60E-06	1	TPP Breaker -Q1 Fails	Breaker spurious ops, OREDA-92, 4.2.6.1
475	TPP-BKR-LF-Q2	8.00E-07	1.60E-06	1	TPP Breaker -Q2 Fails	Breaker spurious ops, OREDA-92, 4.2.6.1
476	TPP-BKR-LF-Q3	8.00E-07	1.60E-06	1	TPP Breaker -Q3 Fails	Breaker spurious ops, OREDA-92, 4.2.6.1
477	TPP-BKR-LF-Q4	8.00E-07	1.60E-06	1	TPP Breaker -Q4 Fails	Breaker spurious ops, OREDA-92, 4.2.6.1
478	TPP-BRD-LF-A1	1.59E-05	3.18E-05	1	TPP CXM/FISO Board -A1 Fails	Input/Output Boards, OREDA-97, 4.1 abn. out+flo+part unknown
479	TPP-BRD-LF-A3	1.59E-05	3.18E-05	1	TPP Carrier Board -A3 Fails	Input/Output Boards, OREDA-97, 4.1 abn. out+flo+part unknown
480	TPP-BRD-LF-A33	1.59E-05	3.18E-05	1	TPP Carrier Board -A33 Fails	Input/Output Boards, OREDA-97, 4.1 abn. out+flo+part unknown
481	TPP-BRD-LF-A35	1.59E-05	3.18E-05	1	TPP Piggyback Board -A35 Fails	Input/Output Boards, OREDA-97, 4.1 abn. out+flo+part unknown
482	TPP-BRD-LF-A4	1.59E-05	3.18E-05	1	TPP Piggyback Board -A4 Fails	Input/Output Boards, OREDA-97, 4.1 abn. out+flo+part unknown
483	TPP-BRD-LF-A48	1.59E-05	3.18E-05	1	TPP CXM/FISO Board -A48 Fails	Input/Output Boards, OREDA-97, 4.1 abn. out+flo+part unknown
484	TPP-BRD-LF-A5	1.59E-05	3.18E-05	1	TPP Piggyback Board -A5 Fails	Input/Output Boards, OREDA-97, 4.1 abn. out+flo+part unknown
485	TPP-BRD-LF-A50	1.59E-05	3.18E-05	1	TPP Carrier Board -A50 Fails	Input/Output Boards, OREDA-97, 4.1 abn. out+flo+part unknown
486	TPP-BRD-LF-A51	1.59E-05	3.18E-05	1	TPP Piggyback Board -A51 Fails	Input/Output Boards, OREDA-97, 4.1 abn. out+flo+part unknown
487	TPP-BRD-LF-A52	1.59E-05	3.18E-05	1	TPP Piggyback Board -A52 Fails	Input/Output Boards, OREDA-97, 4.1 abn. out+flo+part unknown
488	TPP-BRD-LF-A80	1.59E-05	3.18E-05	1	TPP Carrier Board -A80 Fails	Input/Output Boards, OREDA-97, 4.1 abn. out+flo+part unknown
489	TPP-BRD-LF-A82	1.59E-05	3.18E-05	1	TPP Piggyback Board -A82 Fails	Input/Output Boards, OREDA-97, 4.1 abn. out+flo+part unknown
490	TPP-BUS-LF-VMEA	1.00E-05	NA	NA	TPP VME Bus A Fails	Estimate
491	TPP-BUS-LF-VMEB	1.00E-05	NA	NA	TPP VME Bus B Fails	Estimate
492	TPP-CPU-LF-A2	1.31E-06	2.62E-06	1	TPP CPU Board -A2 Fails	CPU Boards, OREDA-97, 4.1 abn. out+flo+part unknown
493	TPP-CPU-LF-A49	1.31E-06	2.62E-06	1	TPP CPU Board -A49 Fails	CPU Boards, OREDA-97, 4.1 abn. out+flo+part unknown
494	TPP-DIO-LF-V1	1.00E-08	2.00E-08	1	TPP Diode -V1 Fails	Estimate
495	TPP-DIO-LF-V2	1.00E-08	2.00E-08	1	TPP Diode -V2 Fails	Estimate
496	TPP-FUS-LF-F1	1.00E-08	2.00E-08	1	TPP Fuse -F1 Fails	IEEE-500, 3.51, Fuses up to 1000V
497	TPP-FUS-LF-F13	1.00E-08	2.00E-08	1	TPP Fuse -F13 Fails	IEEE-500, 3.51, Fuses up to 1000V
498	TPP-FUS-LF-F14	1.00E-08	2.00E-08	1	TPP Fuse -F14 Fails	IEEE-500, 3.51, Fuses up to 1000V
499	TPP-FUS-LF-F15	1.00E-08	2.00E-08	1	TPP Fuse -F15 Fails	IEEE-500, 3.51, Fuses up to 1000V
500	TPP-FUS-LF-F18	1.00E-08	2.00E-08	1	TPP Fuse -F18 Fails	IEEE-500, 3.51, Fuses up to 1000V
501	TPP-FUS-LF-F19	1.00E-08	2.00E-08	1	TPP Fuse -F19 Fails	IEEE-500, 3.51, Fuses up to 1000V
502	TPP-FUS-LF-F2	1.00E-08	2.00E-08	1	TPP Fuse -F2 Fails	IEEE-500, 3.51, Fuses up to 1000V

Confidential Treatment Requested by Transocean Holdings LLC TRN-HCEC-00056796

Table B-1: Basic Event Data (continued)

No.	Identifier	UA	Lambda	Tau	Description	Basis
503	TPP-FUS-LF-F3	1.00E-08	2.00E-08	1	TPP Fuse -F3 Fails	IEEE-500, 3.51, Fuses up to 1000V
504	TPP-FUS-LF-F6	1.00E-08	2.00E-08	1	TPP Fuse -F6 Fails	IEEE-500, 3.51, Fuses up to 1000V
505	TPP-FUS-LF-F7	1.00E-08	2.00E-08	1	TPP Fuse -F7 Fails	IEEE-500, 3.51, Fuses up to 1000V
506	TPP-OLM-LF-U1	1.00E-04	NA	NA	TPP Optical Link Module -U1 Fails	Estimate
507	TPP-OLM-LF-U2	1.00E-04	NA	NA	TPP Optical Link Module -U2 Fails	Estimate
508	TPP-PSP-LF-G1	1.45E-05	2.90E-05	1	TPP Power Supply -G1 Fails	Power Supply, OREDA-92, 5.5.2
509	TPP-PSP-LF-G2	1.45E-05	2.90E-05	1	TPP Power Supply -G2 Fails	Power Supply, OREDA-92, 5.5.2
510	TPP-PSP-LF-G4	1.45E-05	2.90E-05	1	TPP Power Supply -G4 Fails	Power Supply, OREDA-92, 5.5.2
511	TPP-PSP-LF-G5	1.45E-05	2.90E-05	1	TPP Power Supply -G5 Fails	Power Supply, OREDA-92, 5.5.2
512	TPP-SWT-LF-BCS	1.74E-04	6.90E-07	504	TPP Switch Fails to Operate For Open Blue Conduit Supply	IEEE-500, 8.22.15
513	TPP-SWT-LF-BHLS	1.74E-04	6.90E-07	504	TPP Switch Fails to Operate For Open Blue HL Supply	IEEE-500, 8.22.15
514	TPP-SWT-LF-CHP	8.28E-06	6.90E-07	24	TPP Switch Fails to Operate For HP Close CSR	IEEE-500, 8.22.15
515	TPP-SWT-LF-CLIC	8.28E-06	6.90E-07	24	TPP Switch Fails to Operate For Close LIC	IEEE-500, 8.22.15
516	TPP-SWT-LF-CLIK	8.28E-06	6.90E-07	24	TPP Switch Fails to Operate For Close LIK	IEEE-500, 8.22.15
517	TPP-SWT-LF-CLOC	8.28E-06	6.90E-07	24	TPP Switch Fails to Operate For Close LOC	IEEE-500, 8.22.15
518	TPP-SWT-LF-CLOK	8.28E-06	6.90E-07	24	TPP Switch Fails to Operate For Close LOK	IEEE-500, 8.22.15
519	TPP-SWT-LF-CSR	8.28E-06	6.90E-07	24	TPP Switch Fails to Operate For Close CSR	IEEE-500, 8.22.15
520	TPP-SWT-LF-CUIC	8.28E-06	6.90E-07	24	TPP Switch Fails to Operate For Close UIC	IEEE-500, 8.22.15
521	TPP-SWT-LF-CUIK	8.28E-06	6.90E-07	24	TPP Switch Fails to Operate For Close UIK	IEEE-500, 8.22.15
522	TPP-SWT-LF-CUOC	8.28E-06	6.90E-07	24	TPP Switch Fails to Operate For Close UOC	IEEE-500, 8.22.15
523	TPP-SWT-LF-CUOK	8.28E-06	6.90E-07	24	TPP Switch Fails to Operate For Close UOK	IEEE-500, 8.22.15
524	TPP-SWT-LF-EDS	3.45E-04	6.90E-07	1000	TPP Switch Fails to Operate For EDS	IEEE-500, 8.22.15
525	TPP-SWT-LF-LAC	1.74E-04	6.90E-07	504	TPP Switch Fails to Operate For Close LA	IEEE-500, 8.22.15
526	TPP-SWT-LF-LPR	1.74E-04	6.90E-07	504	TPP Switch Fails to Operate For Close LPR	IEEE-500, 8.22.15
527	TPP-SWT-LF-MPR	1.74E-04	6.90E-07	504	TPP Switch Fails to Operate For Close MPR	IEEE-500, 8.22.15
528	TPP-SWT-LF-OLIC	8.28E-06	6.90E-07	24	TPP Switch Fails to Operate For Open LIC	IEEE-500, 8.22.15
529	TPP-SWT-LF-OLIK	8.28E-06	6.90E-07	24	TPP Switch Fails to Operate For Open LIK	IEEE-500, 8.22.15
530	TPP-SWT-LF-OLOC	8.28E-06	6.90E-07	24	TPP Switch Fails to Operate For Open LOC	IEEE-500, 8.22.15
531	TPP-SWT-LF-OLOK	8.28E-06	6.90E-07	24	TPP Switch Fails to Operate For Open LOK	IEEE-500, 8.22.15
532	TPP-SWT-LF-OUIC	8.28E-06	6.90E-07	24	TPP Switch Fails to Operate For Open UIC	IEEE-500, 8.22.15
533	TPP-SWT-LF-OUIK	8.28E-06	6.90E-07	24	TPP Switch Fails to Operate For Open UIK	IEEE-500, 8.22.15
534	TPP-SWT-LF-OUOC	8.28E-06	6.90E-07	24	TPP Switch Fails to Operate For Open UOC	IEEE-500, 8.22.15
535	TPP-SWT-LF-OUOK	8.28E-06	6.90E-07	24	TPP Switch Fails to Operate For Open UOK	IEEE-500, 8.22.15
536	TPP-SWT-LF-PD	3.45E-04	6.90E-07	1000	TPP Switch Fails to Operate For LMRP Prl. Dis.	IEEE-500, 8.22.15
537	TPP-SWT-LF-PSEL	1.74E-04	6.90E-07	504	TPP Switch Fails to Operate For Pod Select	IEEE-500, 8.22.15
538	TPP-SWT-LF-S241	8.28E-06	6.90E-07	24	TPP Enable Switch Fails to Operate	IEEE-500, 8.22.15

Confidential Treatment Requested by Transocean Holdings LLC

TRN-HCEC-00056797

Table B-1: Basic Event Data (continued)

No.	Identifier	UA	Lambda	Tau	Description	Basis
539	TPP-SWT-LF-S242	8.28E-06	6.90E-07	24	TPP Enable Switch Fails to Operate	IEEE-500, 8.22.15
540	TPP-SWT-LF-SD	3.45E-04	6.90E-07	1000	TPP Switch Fails to Operate For LMRP Sec. Dis.	IEEE-500, 8.22.15
541	TPP-SWT-LF-UAC	1.74E-04	6.90E-07	504	TPP Switch Fails to Operate For Close UA	IEEE-500, 8.22.15
542	TPP-SWT-LF-UHP	1.74E-04	6.90E-07	504	TPP Switch Fails to Operate For HP Close USR	IEEE-500, 8.22.15
543	TPP-SWT-LF-UPR	1.74E-04	6.90E-07	504	TPP Switch Fails to Operate For Close UPR	IEEE-500, 8.22.15
544	TPP-SWT-LF-USR	1.74E-04	6.90E-07	504	TPP Switch Fails to Operate For Close USR	IEEE-500, 8.22.15
545	TPP-SWT-LF-YCS	1.74E-04	6.90E-07	504	TPP Switch Fails to Operate For Open Yellow Conduit Supply	IEEE-500, 8.22.15
546	TPP-SWT-LF-YHLS	1.74E-04	6.90E-07	504	TPP Switch Fails to Operate For Open Yellow HL Supply	IEEE-500, 8.22.15
547	TPP-XHE-FO-ENABL	3.00E-03	NA	NA	TPP Operator Fails to Use Enable	Basic Human Error Probability
548	TPP-XHE-FR-MANED	9.50E-01	NA	NA	Driller's Control Panel Manned	Estimate
549	TPP-XHE-FR-UNMAN	5.00E-02	NA	NA	Driller's Control Panel Unmanned	Estimate
550	UPS-BAT-LF-BAT-A	4.12E-02	2.90E-05	2920	Power Not Available From Battery A	OREDA-92, 4.2.5, All Modes
551	UPS-BAT-LF-BAT-B	4.12E-02	2.90E-05	2920	Power Not Available From Battery B	OREDA-92, 4.2.5, All Modes
552	UPS-BAT-LF-DPLET	1.00E-02	NA	NA	Extended Emergency Power Outage	Estimate
553	UPS-BUS-LF-BUS-A	2.66E-04	5.32E-04	1	Power Not Available From Ship Bus A	OREDA-97, 2.1.1.2, All Modes
554	UPS-BUS-LF-BUS-B	2.66E-04	5.32E-04	1	Power Not Available From Ship Bus B	OREDA-97, 2.1.1.2, All Modes
555	UPS-BUS-LF-EMBUS	2.66E-04	5.32E-04	1	Power Not Available From Emergency Bus	OREDA-97, 2.1.1.2, All Modes
556	UPS-INV-LF-BCHGA	1.30E-05	2.60E-05	1	UPS-A Inverter/ Battery Charger Fails to Function	OREDA-92, 4.2.2, All Modes
557	UPS-INV-LF-BCHGB	1.30E-05	2.60E-05	1	UPS-B Inverter/ Battery Charger Fails to Function	OREDA-92, 4.2.2, All Modes
558	UPS-SWT-LF-STATA	3.45E-07	6.90E-07	1	UPS-A Static Switch Fails to Pass Power	IEEE-500, 8.22.15
559	UPS-SWT-LF-STATB	3.45E-07	6.90E-07	1	UPS-B Static Switch Fails to Pass Power	IEEE-500, 8.22.15
560	YCP-CON-LF-JBOXY	1.50E-08	3.00E-08	1	Failure of Yellow J-Box to Pass Signal	IEEE-500, 9.2 Composite
561	YPD-ACC-PB-LAREG	1.34E-04	1.60E-06	168	LA Regulator Pilot Accum. (4) Loss of Integrity	OREDA-92, 5.3.1, Ruptured pressure lines/accumulators
562	YPD-ACC-PB-MANPI	1.34E-04	1.60E-06	168	Pod Manifold Reg. Pilot Accum. (4) Loss of Integrity	OREDA-92, 5.3.1, Ruptured pressure lines/accumulators
563	YPD-ACC-PB-PSREG	1.34E-04	1.60E-06	168	LMRP Connector Reg. Pilot Accum. (4) Loss of Integrity	OREDA-92, 5.3.1, Ruptured pressure lines/accumulators
564	YPD-ACC-PB-UAREG	1.34E-04	1.60E-06	168	UA Regulator Pilot Accum. (4) Loss of Integrity	OREDA-92, 5.3.1, Ruptured pressure lines/accumulators
565	YPD-ACC-UA-LAREG	1.00E-03	NA	NA	LA Regulator Pilot Accum. (4) Inad. Precharge	Estimate
566	YPD-ACC-UA-MANPI	1.00E-03	NA	NA	Pod Manifold Reg. Pilot Accum. (4) Inad. Precharge	Estimate
567	YPD-ACC-UA-PSREG	1.00E-03	NA	NA	LMRP Connector Reg. Pilot Accum. (4) Inad. Precharge	Estimate
568	YPD-ACC-UA-UAREG	1.00E-03	NA	NA	UA Regulator Pilot Accum. (4) Inad. Precharge	Estimate
569	YPD-BRD-LF-A10	1.59E-05	3.18E-05	1	Carrier Board -A10 Fails	Input/Output Boards, OREDA-97, 4.1 abn. out+flo+part unknown
570	YPD-BRD-LF-A12	1.59E-05	3.18E-05	1	Piggyback Board -A12 Fails	Input/Output Boards, OREDA-97, 4.1 abn. out+flo+part unknown
571	YPD-BRD-LF-A13	1.59E-05	3.18E-05	1	Carrier Board -A13 Fails	Input/Output Boards, OREDA-97, 4.1 abn. out+flo+part unknown
572	YPD-BRD-LF-A14	1.59E-05	3.18E-05	1	Piggyback Board -A14 Fails	Input/Output Boards, OREDA-97, 4.1 abn. out+flo+part unknown
573	YPD-BRD-LF-A15	1.59E-05	3.18E-05	1	Piggyback Board -A15 Fails	Input/Output Boards, OREDA-97, 4.1 abn. out+flo+part unknown
574	YPD-BRD-LF-A16	1.59E-05	3.18E-05	1	Carrier Board -A16 Fails	Input/Output Boards, OREDA-97, 4.1 abn. out+flo+part unknown

Confidential Treatment Requested by Transocean Holdings LLC TRN-HCEC-00056798

Table B-1: Basic Event Data (continued)

No.	Identifier	UA	Lambda	Tau	Description	Basis
575	YPD-BRD-LF-A17	1.59E-05	3.18E-05	1	Piggyback Board -A17 Fails	Input/Output Boards, OREDA-97, 4.1 abn. out+flo+part unknown
576	YPD-BRD-LF-A18	1.59E-05	3.18E-05	1	Piggyback Board -A18 Fails	Input/Output Boards, OREDA-97, 4.1 abn. out+flo+part unknown
577	YPD-BRD-LF-A19	1.59E-05	3.18E-05	1	Carrier Board -A19 Fails	Input/Output Boards, OREDA-97, 4.1 abn. out+flo+part unknown
578	YPD-BRD-LF-A2	1.59E-05	3.18E-05	1	Yellow CXM/FISO Board -A2 Fails	Input/Output Boards, OREDA-97, 4.1 abn. out+flo+part unknown
579	YPD-BRD-LF-A21	1.59E-05	3.18E-05	1	Piggyback Board -A21 Fails	Input/Output Boards, OREDA-97, 4.1 abn. out+flo+part unknown
580	YPD-BRD-LF-A33	1.59E-05	3.18E-05	1	Yellow CXM/FISO Board -A33 Fails	Input/Output Boards, OREDA-97, 4.1 abn. out+flo+part unknown
581	YPD-BRD-LF-A35	1.59E-05	3.18E-05	1	Carrier Board -A35 Fails	Input/Output Boards, OREDA-97, 4.1 abn. out+flo+part unknown
582	YPD-BRD-LF-A36	1.59E-05	3.18E-05	1	Piggyback Board -A36 Fails	Input/Output Boards, OREDA-97, 4.1 abn. out+flo+part unknown
583	YPD-BRD-LF-A37	1.59E-05	3.18E-05	1	Piggyback Board -A37 Fails	Input/Output Boards, OREDA-97, 4.1 abn. out+flo+part unknown
584	YPD-BRD-LF-A38	1.59E-05	3.18E-05	1	Carrier Board -A38 Fails	Input/Output Boards, OREDA-97, 4.1 abn. out+flo+part unknown
585	YPD-BRD-LF-A39	1.59E-05	3.18E-05	1	Piggyback Board -A39 Fails	Input/Output Boards, OREDA-97, 4.1 abn. out+flo+part unknown
586	YPD-BRD-LF-A4	1.59E-05	3.18E-05	1	Carrier Board -A4 Fails	Input/Output Boards, OREDA-97, 4.1 abn. out+flo+part unknown
587	YPD-BRD-LF-A41	1.59E-05	3.18E-05	1	Carrier Board -A41 Fails	Input/Output Boards, OREDA-97, 4.1 abn. out+flo+part unknown
588	YPD-BRD-LF-A43	1.59E-05	3.18E-05	1	Piggyback Board -A43 Fails	Input/Output Boards, OREDA-97, 4.1 abn. out+flo+part unknown
589	YPD-BRD-LF-A44	1.59E-05	3.18E-05	1	Carrier Board -A44 Fails	Input/Output Boards, OREDA-97, 4.1 abn. out+flo+part unknown
590	YPD-BRD-LF-A45	1.59E-05	3.18E-05	1	Piggyback Board -A45 Fails	Input/Output Boards, OREDA-97, 4.1 abn. out+flo+part unknown
591	YPD-BRD-LF-A46	1.59E-05	3.18E-05	1	Piggyback Board -A46 Fails	Input/Output Boards, OREDA-97, 4.1 abn. out+flo+part unknown
592	YPD-BRD-LF-A47	1.59E-05	3.18E-05	1	Carrier Board -A47 Fails	Input/Output Boards, OREDA-97, 4.1 abn. out+flo+part unknown
593	YPD-BRD-LF-A48	1.59E-05	3.18E-05	1	Piggyback Board -A48 Fails	Input/Output Boards, OREDA-97, 4.1 abn. out+flo+part unknown
594	YPD-BRD-LF-A49	1.59E-05	3.18E-05	1	Piggyback Board -A49 Fails	Input/Output Boards, OREDA-97, 4.1 abn. out+flo+part unknown
595	YPD-BRD-LF-A5	1.59E-05	3.18E-05	1	Piggyback Board -A5 Fails	Input/Output Boards, OREDA-97, 4.1 abn. out+flo+part unknown
596	YPD-BRD-LF-A50	1.59E-05	3.18E-05	1	Carrier Board -A50 Fails	Input/Output Boards, OREDA-97, 4.1 abn. out+flo+part unknown
597	YPD-BRD-LF-A52	1.59E-05	3.18E-05	1	Piggyback Board -A52 Fails	Input/Output Boards, OREDA-97, 4.1 abn. out+flo+part unknown
598	YPD-BRD-LF-A6	1.59E-05	3.18E-05	1	Piggyback Board -A6 Fails	Input/Output Boards, OREDA-97, 4.1 abn. out+flo+part unknown
599	YPD-BRD-LF-A7	1.59E-05	3.18E-05	1	Carrier Board -A7 Fails	Input/Output Boards, OREDA-97, 4.1 abn. out+flo+part unknown
600	YPD-BRD-LF-A8	1.59E-05	3.18E-05	1	Piggyback Board -A8 Fails	Input/Output Boards, OREDA-97, 4.1 abn. out+flo+part unknown
601	YPD-BUS-LF-VMEA	1.00E-05	NA	NA	Yellow VME Bus A Fails	Estimate
602	YPD-BUS-LF-VMEB	1.00E-05	NA	NA	Yellow VME Bus B Fails	Estimate
603	YPD-CBL-LF-CABLE	3.81E-06	7.62E-06	1	Yellow Pod Control/Power Cable Fails	OREDA-97, 5.1.2, 4 failures/5.25E5 hrs
604	YPD-CHK-LF-BYPAS	1.04E-03	2.08E-06	1000	Yellow Pilot Supply Filter Bypass Check Valve Fails to Funct	IEEE-500, 11.2.3, Composite, all
605	YPD-CON-LF-JBOXY	1.50E-08	3.00E-08	1	Failure of Yellow J-Box to Pass Signal	IEEE-500, 9.2 Composite
606	YPD-CON-LF-OPNFC	2.13E-01	5.00E-01	1	Pie Connector Failure to Maintain Integrity - Open Face	Estimate
607	YPD-CON-LF-UNPLG	1.26E-04	2.52E-04	1	Pie Connector Male Plug Unplugged	Estimate (lognormal 95%=1e-2,5%=1e-6)/cycle-pod, cycle=2160 hrs, 108 plugs/pod
608	YPD-CON-LF-X10	1.02E-05	2.05E-05	1	Yellow Pod Connector -X10 Fails	OREDA-97, 5.1.2, Control Connectors, 13.04%
609	YPD-CON-LF-X19	1.02E-05	2.05E-05	1	Yellow Pod Pie Connector -X19 Fails	OREDA-97, 5.1.2, Control Connectors, 13.04%

Confidential Treatment Requested by Transocean Holdings LLC

TRN-HCEC-00056799

Table B-1: Basic Event Data (continued)

No.	Identifier	UA	Lambda	Tau	Description	Basis
610	YPD-CON-LF-X19A	1.02E-05	2.05E-05	1	Yellow Pod Pie Connector -X19A	OREDA-97, 5.1.2, Control Connectors, 13.04%
611	YPD-CON-LF-X19B	1.02E-05	2.05E-05	1	Yellow Pod Pie Connector -X19B	OREDA-97, 5.1.2, Control Connectors, 13.04%
612	YPD-CON-LF-X19C	1.02E-05	2.05E-05	1	Yellow Pod Pie Connector -X19C	OREDA-97, 5.1.2, Control Connectors, 13.04%
613	YPD-CON-LF-X19D	1.02E-05	2.05E-05	1	Yellow Pod Pie Connector -X19D	OREDA-97, 5.1.2, Control Connectors, 13.04%
614	YPD-CON-LF-X21	1.02E-05	2.05E-05	1	Yellow Pod Pie Connector -X21 Fails	OREDA-97, 5.1.2, Control Connectors, 13.04%
615	YPD-CON-LF-X21B	1.02E-05	2.05E-05	1	Yellow Pod Pie Connector -X21B Plug Fails	OREDA-97, 5.1.2, Control Connectors, 13.04%
616	YPD-CON-LF-X21D	1.02E-05	2.05E-05	1	Yellow Pod Pie Connector -X21D Plug Fails	OREDA-97, 5.1.2, Control Connectors, 13.04%
617	YPD-CON-LF-X21E	1.02E-05	2.05E-05	1	Yellow Pod Pie Connector -X21E	OREDA-97, 5.1.2, Control Connectors, 13.04%
618	YPD-CON-LF-X23	1.02E-05	2.05E-05	1	Yellow Pod Pie Connector -X23 Fails	OREDA-97, 5.1.2, Control Connectors, 13.04%
619	YPD-CON-LF-X23A	1.02E-05	2.05E-05	1	Yellow Pod Pie Connector -X23A	OREDA-97, 5.1.2, Control Connectors, 13.04%
620	YPD-CON-LF-X23E	1.02E-05	2.05E-05	1	Yellow Pod Pie Connector -X23E	OREDA-97, 5.1.2, Control Connectors, 13.04%
621	YPD-CON-LF-X28	1.02E-05	2.05E-05	1	Yellow Pod Pie Connector -X28 Fails	OREDA-97, 5.1.2, Control Connectors, 13.04%
622	YPD-CON-LF-X28E	1.02E-05	2.05E-05	1	Yellow Pod Pie Connector -X28E	OREDA-97, 5.1.2, Control Connectors, 13.04%
623	YPD-CON-LF-X30	1.02E-05	2.05E-05	1	Yellow Pod Pie Connector -X30 Fails	OREDA-97, 5.1.2, Control Connectors, 13.04%
624	YPD-CON-LF-X30A	1.02E-05	2.05E-05	1	Yellow Pod Pie Connector -X30A	OREDA-97, 5.1.2, Control Connectors, 13.04%
625	YPD-CON-LF-X30B	1.02E-05	2.05E-05	1	Yellow Pod Pie Connector -X30B	OREDA-97, 5.1.2, Control Connectors, 13.04%
626	YPD-CON-LF-X30C	1.02E-05	2.05E-05	1	Yellow Pod Pie Connector -X30C	OREDA-97, 5.1.2, Control Connectors, 13.04%
627	YPD-CON-LF-X30D	1.02E-05	2.05E-05	1	Yellow Pod Pie Connector -X30D Plug Fails	OREDA-97, 5.1.2, Control Connectors, 13.04%
628	YPD-CON-LF-X30E	1.02E-05	2.05E-05	1	Yellow Pod Pie Connector -X30E	OREDA-97, 5.1.2, Control Connectors, 13.04%
629	YPD-CON-LF-X31	1.02E-05	2.05E-05	1	Yellow Pod Pie Connector -X31 Fails	OREDA-97, 5.1.2, Control Connectors, 13.04%
630	YPD-CON-LF-X31A	1.02E-05	2.05E-05	1	Yellow Pod Pie Connector -X31A	OREDA-97, 5.1.2, Control Connectors, 13.04%
631	YPD-CON-LF-X31B	1.02E-05	2.05E-05	1	Yellow Pod Pie Connector -X31B	OREDA-97, 5.1.2, Control Connectors, 13.04%
632	YPD-CON-LF-X31D	1.02E-05	2.05E-05	1	Yellow Pod Pie Connector -X31D	OREDA-97, 5.1.2, Control Connectors, 13.04%
633	YPD-CON-LF-X31F	1.02E-05	2.05E-05	1	Yellow Pod Pie Connector -X31F	OREDA-97, 5.1.2, Control Connectors, 13.04%
634	YPD-CON-LF-X32	1.02E-05	2.05E-05	1	Yellow Pod Pie Connector -X32 Fails	OREDA-97, 5.1.2, Control Connectors, 13.04%
635	YPD-CON-LF-X32F	1.02E-05	2.05E-05	1	Yellow Pod Pie Connector -X32F	OREDA-97, 5.1.2, Control Connectors, 13.04%
636	YPD-CON-LF-X34	1.02E-05	2.05E-05	1	Yellow Pod Pie Connector -X34 Fails	OREDA-97, 5.1.2, Control Connectors, 13.04%
637	YPD-CON-LF-X34B	1.02E-05	2.05E-05	1	Yellow Pod Pie Connector -X34B	OREDA-97, 5.1.2, Control Connectors, 13.04%
638	YPD-CON-LF-X34F	1.02E-05	2.05E-05	1	Yellow Pod Pie Connector -X34F	OREDA-97, 5.1.2, Control Connectors, 13.04%
639	YPD-CON-LF-X35	1.02E-05	2.05E-05	1	Yellow Pod Pie Connector -X35 Fails	OREDA-97, 5.1.2, Control Connectors, 13.04%
640	YPD-CON-LF-X35E	1.02E-05	2.05E-05	1	Yellow Pod Pie Connector -X35E	OREDA-97, 5.1.2, Control Connectors, 13.04%
641	YPD-CON-LF-X35F	1.02E-05	2.05E-05	1	Yellow Pod Pie Connector -X35F	OREDA-97, 5.1.2, Control Connectors, 13.04%
642	YPD-CON-LF-X36	1.02E-05	2.05E-05	1	Yellow Pod Pie Connector -X36 Fails	OREDA-97, 5.1.2, Control Connectors, 13.04%
643	YPD-CON-LF-X36A	1.02E-05	2.05E-05	1	Yellow Pod Pie Connector -X36A Plug Fails	OREDA-97, 5.1.2, Control Connectors, 13.04%
644	YPD-CON-LF-X38	1.02E-05	2.05E-05	1	Yellow Pod Pie Connector -X38 Fails	OREDA-97, 5.1.2, Control Connectors, 13.04%
645	YPD-CON-LF-X38E	1.02E-05	2.05E-05	1	Yellow Pod Pie Connector -X38E Plug Fails	OREDA-97, 5.1.2, Control Connectors, 13.04%

Confidential Treatment Requested by Transocean Holdings LLC TRN-HCEC-00056800

Table B-1: Basic Event Data (continued)

No.	Identifier	UA	Lambda	Tau	Description	Basis
646	YPD-CON-LF-X39	1.02E-05	2.05E-05	1	Yellow Pod Pie Connector -X39 Fails	OREDA-97, 5.1.2, Control Connectors, 13.04%
647	YPD-CON-LF-X39A	1.02E-05	2.05E-05	1	Yellow Pod Pie Connector -X39A	OREDA-97, 5.1.2, Control Connectors, 13.04%
648	YPD-CON-LF-X39B	1.02E-05	2.05E-05	1	Yellow Pod Pie Connector -X39B	OREDA-97, 5.1.2, Control Connectors, 13.04%
649	YPD-CON-LF-X39C	1.02E-05	2.05E-05	1	Yellow Pod Pie Connector -X39C	OREDA-97, 5.1.2, Control Connectors, 13.04%
650	YPD-CON-LF-X39D	1.02E-05	2.05E-05	1	Yellow Pod Pie Connector -X39D	OREDA-97, 5.1.2, Control Connectors, 13.04%
651	YPD-CON-LF-X39E	1.02E-05	2.05E-05	1	Yellow Pod Pie Connector -X39E	OREDA-97, 5.1.2, Control Connectors, 13.04%
652	YPD-CON-LF-X39F	1.02E-05	2.05E-05	1	Yellow Pod Pie Connector -X39F	OREDA-97, 5.1.2, Control Connectors, 13.04%
653	YPD-CON-LK-PIE	9.00E-05	1.80E-04	1	Pie Connector Failure to Maintain Integrity	Estimate (1e-5/hr*18 connectors)
654	YPD-CPU-LF-A3	1.31E-06	2.62E-06	1	Yellow CPU Board -A3 Fails	CPU Boards, OREDA-97, 4.1 abn. out+flo+part unknown
655	YPD-CPU-LF-A34	1.31E-06	2.62E-06	1	Yellow CPU Board -A34 Fails	CPU Boards, OREDA-97, 4.1 abn. out+flo+part unknown
656	YPD-FTR-LF-20MIC	2.52E-03	3.00E-05	168	Yellow Pod Pilot Supply Filter Fails to Allow Flow	OREDA-92, 5.3.1, Clogged Filter/line
657	YPD-FUS-LF-F1	1.00E-08	2.00E-08	1	Fuse Board -F1 Fails	IEEE-500, 3.51, Fuses up to 1000V
658	YPD-FUS-LF-F2	1.00E-08	2.00E-08	1	Fuse Board -F2 Fails	IEEE-500, 3.51, Fuses up to 1000V
659	YPD-FUS-LF-F3	1.00E-08	2.00E-08	1	Fuse Board -F3 Fails	IEEE-500, 3.51, Fuses up to 1000V
660	YPD-FUS-LF-F4	1.00E-08	2.00E-08	1	Fuse Board -F4 Fails	IEEE-500, 3.51, Fuses up to 1000V
661	YPD-HOV-FO-CSRHP	2.79E-03	3.33E-05	168	Yellow HP CSR HOV Fails to Open	OREDA-97, 4.4, body/internals, seat, seals, actuator
662	YPD-HOV-FO-CSRNP	2.79E-03	3.33E-05	168	Yellow NP CSR HOV Fails to Open	OREDA-97, 4.4, body/internals, seat, seals, actuator
663	YPD-HOV-FO-LACLS	2.79E-03	3.33E-05	168	Yellow LA Close HOV Fails to Open	OREDA-97, 4.4, body/internals, seat, seals, actuator
664	YPD-HOV-FO-LPR	2.79E-03	3.33E-05	168	Yellow LPR Fails to Open	OREDA-97, 4.4, body/internals, seat, seals, actuator
665	YPD-HOV-FO-MPR	2.79E-03	3.33E-05	168	Yellow MPR HOV Fails to Open	OREDA-97, 4.4, body/internals, seat, seals, actuator
666	YPD-HOV-FO-PDISC	1.65E-02	3.33E-05	1000	Yellow Primary Disconnect HOV Fails to Open	OREDA-97, 4.4, body/internals, seat, seals, actuator
667	YPD-HOV-FO-SDISC	1.65E-02	3.33E-05	1000	Yellow Secondary Disconnect HOV Fails to Open	OREDA-97, 4.4, body/internals, seat, seals, actuator
668	YPD-HOV-FO-UACLS	2.79E-03	3.33E-05	168	Yellow UA Close HOV Fails to Open	OREDA-97, 4.4, body/internals, seat, seals, actuator
669	YPD-HOV-FO-UPR	2.79E-03	3.33E-05	168	Yellow UPR HOV Fails to Open	OREDA-97, 4.4, body/internals, seat, seals, actuator
670	YPD-HOV-FO-USRHP	2.79E-03	3.33E-05	168	Yellow HP USR HOV Fails to Open	OREDA-97, 4.4, body/internals, seat, seals, actuator
671	YPD-HOV-FO-USRNP	2.79E-03	3.33E-05	168	Yellow USR HOV Fails to Open	OREDA-97, 4.4, body/internals, seat, seals, actuator
672	YPD-HOV-LF-LIC	3.85E-03	4.60E-05	168	Yellow Hydraulic Operated LIC Valve Fails to Function	OREDA-92, 7.5.1.6, all modes
673	YPD-HOV-LF-LIK	3.85E-03	4.60E-05	168	Yellow Hydraulic Operated LIK Valve Fails to Function	OREDA-92, 7.5.1.6, all modes
674	YPD-HOV-LF-LOC	3.85E-03	4.60E-05	168	Yellow Hydraulic Operated LOC Valve Fails to Function	OREDA-92, 7.5.1.6, all modes
675	YPD-HOV-LF-LOK	3.85E-03	4.60E-05	168	Yellow Hydraulic Operated LOK Valve Fails to Function	OREDA-92, 7.5.1.6, all modes
676	YPD-HOV-LF-UIC	3.85E-03	4.60E-05	168	Yellow Hydraulic Operated UIC Valve Fails to Function	OREDA-92, 7.5.1.6, all modes
677	YPD-HOV-LF-UIK	3.85E-03	4.60E-05	168	Yellow Hydraulic Operated UIK Valve Fails to Function	OREDA-92, 7.5.1.6, all modes
678	YPD-HOV-LF-UOC	3.85E-03	4.60E-05	168	Yellow Hydraulic Operated UOC Valve Fails to Function	OREDA-92, 7.5.1.6, all modes
679	YPD-HOV-LF-UOK	3.85E-03	4.60E-05	168	Yellow Hydraulic Operated UOK Valve Fails to Function	OREDA-92, 7.5.1.6, all modes
680	YPD-ISO-SO-ISMTR	2.00E-07	4.00E-07	1	Spurious Op. of CDP Isometer Shuts Down Yellow Pod	IEEE-500, 3.1, Circuit Breakers, Spurious Operation
681	YPD-MOD-LF-A1	5.00E-04	1.00E-03	1	Yellow Modem -A1 Fails to Pass Signal	Estimate

Confidential Treatment Requested by Transocean Holdings LLC TRN-HCEC-00056801

Table B-1: Basic Event Data (continued)

No.	Identifier	UA	Lambda	Tau	Description	Basis
682	YPD-MOD-LF-A32	5.00E-04	1.00E-03	1	Yellow Modem -A32 Fails to Pass Signal	Estimate
683	YPD-PLC-SO-LAPRVT	7.30E-05	1.46E-04	1	Spurious LA Regulator Pilot Vent Yellow PLC Output	OREDA-97, 4.1.2, PLC Spurious Operation
684	YPD-PLC-SO-LPRVT	7.30E-05	1.46E-04	1	Spur. LMRP Conn. Reg. Pilot Vent Yellow PLC Output	OREDA-97, 4.1.2, PLC Spurious Operation
685	YPD-PLC-SO-MPRVT	7.30E-05	1.46E-04	1	Spurious Pod Man. Reg. Pilot Vent PLC Output	OREDA-97, 4.1.2, PLC Spurious Operation
686	YPD-PLC-SO-UAPRVT	7.30E-05	1.46E-04	1	Spurious UA Regulator Pilot Vent Yellow PLC Output	OREDA-97, 4.1.2, PLC Spurious Operation
687	YPD-PSP-LF-G1	1.45E-05	2.90E-05	1	Yellow Power Supply Board -G1 Fails	Power Supply, OREDA-92, 5.5.2
688	YPD-PSP-LF-G2	1.45E-05	2.90E-05	1	Yellow Power Supply Board -G2 Fails	Power Supply, OREDA-92, 5.5.2
689	YPD-PSP-LF-G3	1.45E-05	2.90E-05	1	Yellow Power Supply Board -G3 Fails	Power Supply, OREDA-92, 5.5.2
690	YPD-PSP-LF-G4	1.45E-05	2.90E-05	1	Yellow Power Supply Board -G4 Fails	Power Supply, OREDA-92, 5.5.2
691	YPD-PSP-LF-G5	1.45E-05	2.90E-05	1	Yellow Power Supply Board -G5 Fails	Power Supply, OREDA-92, 5.5.2
692	YPD-PSP-LF-G6	1.45E-05	2.90E-05	1	Yellow Power Supply Board -G6 Fails	Power Supply, OREDA-92, 5.5.2
693	YPD-PSP-LF-G7	1.45E-05	2.90E-05	1	Yellow Power Supply Board -G7 Fails	Power Supply, OREDA-92, 5.5.2
694	YPD-PSP-LF-G8	1.45E-05	2.90E-05	1	Yellow Power Supply Board -G8 Fails	Power Supply, OREDA-92, 5.5.2
695	YPD-REG-LF-M3KSI	9.24E-06	1.10E-07	168	3000 psi Yellow Reg. Fails to Provide Adequate Pressure	IEEE-500, 8.25.6
696	YPD-REG-LO-LAREG	9.24E-06	1.10E-07	168	Low Output from Yellow LA Regulator	IEEE-500, 8.25.6
697	YPD-REG-LO-MNREG	9.24E-06	1.10E-07	168	Low Output from Yellow Pod Manifold Regulator	IEEE-500, 8.25.6
698	YPD-REG-LO-PSREG	9.24E-06	1.10E-07	168	Low Output from Yellow LMRP Connector Regulator	IEEE-500, 8.25.6
699	YPD-REG-LO-UAREG	9.24E-06	1.10E-07	168	Low Output from Yellow UA Regulator	IEEE-500, 8.25.6
700	YPD-SOV-FC-BSR-O	8.65E-04	1.03E-05	168	Yellow Blind Shear Ram Open Pilot Vlv Fails to Close	OREDA-97, 4.4, Act. Device, control unit, others, unknown
701	YPD-SOV-FC-CSR-O	8.65E-04	1.03E-05	168	Yell. Casing Shear Ram Open Pilot Valve Fails to Close	OREDA-97, 4.4, Act. Device, control unit, others, unknown
702	YPD-SOV-FC-LIC-O	8.65E-04	1.03E-05	168	Yellow LIC Open Pilot Valve Fails to Close	OREDA-97, 4.4, Act. Device, control unit, others, unknown
703	YPD-SOV-FC-LIK-O	8.65E-04	1.03E-05	168	Yellow LIK Open Pilot Valve Fails to Close	OREDA-97, 4.4, Act. Device, control unit, others, unknown
704	YPD-SOV-FC-LOC-O	8.65E-04	1.03E-05	168	Yellow LOC Open Pilot Valve Fails to Close	OREDA-97, 4.4, Act. Device, control unit, others, unknown
705	YPD-SOV-FC-LOK-O	8.65E-04	1.03E-05	168	Yellow LOK Open Pilot Valve Fails to Close	OREDA-97, 4.4, Act. Device, control unit, others, unknown
706	YPD-SOV-FC-PDS-L	1.24E-04	1.03E-05	24	Yellow LMRP Latch Pilot Valve Fails to Close	OREDA-97, 4.4, Act. Device, control unit, others, unknown
707	YPD-SOV-FC-UIC-O	8.65E-04	1.03E-05	168	Yellow UIC Open Pilot Valve Fails to Close	OREDA-97, 4.4, Act. Device, control unit, others, unknown
708	YPD-SOV-FC-UIK-O	8.65E-04	1.03E-05	168	Yellow UIK Open Pilot Valve Fails to Close	OREDA-97, 4.4, Act. Device, control unit, others, unknown
709	YPD-SOV-FC-UOC-O	8.65E-04	1.03E-05	168	Yellow UOC Open Pilot Valve Fails to Close	OREDA-97, 4.4, Act. Device, control unit, others, unknown
710	YPD-SOV-FC-UOK-O	8.65E-04	1.03E-05	168	Yellow UOK Open Pilot Valve Fails to Close	OREDA-97, 4.4, Act. Device, control unit, others, unknown
711	YPD-SOV-FO-ACHRG	8.65E-04	1.03E-05	168	Yellow Stack Acc. Charge Solenoid Valve Fails to Open	OREDA-97, 4.4, Act. Device, control unit, others, unknown
712	YPD-SOV-FO-CSRHP	1.75E-04	2.08E-06	168	Yellow CHP Shear Pilot Valve Fails to Open	IEEE-500, 11.2.3, Composite, all
713	YPD-SOV-FO-CSRNP	1.75E-04	2.08E-06	168	Yellow Casing Shear Ram Pilot Valve Fails to Open	IEEE-500, 11.2.3, Composite, all
714	YPD-SOV-FO-LACLS	8.65E-04	1.03E-05	168	Yellow LA Close Pilot Valve Fails to Open	OREDA-97, 4.4, Act. Device, control unit, others, unknown
715	YPD-SOV-FO-LIC-C	8.65E-04	1.03E-05	168	Yellow LIC Close Pilot Valve Fails to Open	OREDA-97, 4.4, Act. Device, control unit, others, unknown
716	YPD-SOV-FO-LIC-O	8.65E-04	1.03E-05	168	Yellow Open LIC Pilot Valve Fails to Open	OREDA-97, 4.4, Act. Device, control unit, others, unknown
717	YPD-SOV-FO-LIK-C	8.65E-04	1.03E-05	168	Yellow LIK Close Pilot Valve Fails to Open	OREDA-97, 4.4, Act. Device, control unit, others, unknown

Confidential Treatment Requested by Transocean Holdings LLC TRN-HCEC-00056802

Table B-1: Basic Event Data (continued)

No.	Identifier	UA	Lambda	Tau	Description	Basis
718	YPD-SOV-FO-LIK-O	8.65E-04	1.03E-05	168	Yellow Open LIK Pilot Valve Fails to Open	OREDA-97, 4.4, Act. Device, control unit, others, unknown
719	YPD-SOV-FO-LOC-C	8.65E-04	1.03E-05	168	Yellow LOC Close Pilot Valve Fails to Open	OREDA-97, 4.4, Act. Device, control unit, others, unknown
720	YPD-SOV-FO-LOC-O	8.65E-04	1.03E-05	168	Yellow Open LOC Pilot Valve Fails to Open	OREDA-97, 4.4, Act. Device, control unit, others, unknown
721	YPD-SOV-FO-LOK-C	8.65E-04	1.03E-05	168	Yellow LOK Close Pilot Valve Fails to Open	OREDA-97, 4.4, Act. Device, control unit, others, unknown
722	YPD-SOV-FO-LOK-O	8.65E-04	1.03E-05	168	Yellow Open LOK Pilot Valve Fails to Open	OREDA-97, 4.4, Act. Device, control unit, others, unknown
723	YPD-SOV-FO-LPR	8.65E-04	1.03E-05	168	Yellow Lower Pipe Ram Pilot Valve Fails to Open	OREDA-97, 4.4, Act. Device, control unit, others, unknown
724	YPD-SOV-FO-MPR	8.65E-04	1.03E-05	168	Yellow Middle Pipe Ram Pilot Valve Fails to Open	OREDA-97, 4.4, Act. Device, control unit, others, unknown
725	YPD-SOV-FO-PDISC	8.65E-04	1.03E-05	168	Yellow LMRP Disconnect Pilot Valve Fails to Open	OREDA-97, 4.4, Act. Device, control unit, others, unknown
726	YPD-SOV-FO-SDISC	8.65E-04	1.03E-05	168	Yellow LMRP Disconnect Pilot Valve Fails to Open	OREDA-97, 4.4, Act. Device, control unit, others, unknown
727	YPD-SOV-FO-UACLS	8.65E-04	1.03E-05	168	Yellow UA Close Pilot Valve Fails to Open	OREDA-97, 4.4, Act. Device, control unit, others, unknown
728	YPD-SOV-FO-UIC-C	8.65E-04	1.03E-05	168	Yellow UIC Close Pilot Valve Fails to Open	OREDA-97, 4.4, Act. Device, control unit, others, unknown
729	YPD-SOV-FO-UIC-O	8.65E-04	1.03E-05	168	Yellow Open UIC Pilot Valve Fails to Open	OREDA-97, 4.4, Act. Device, control unit, others, unknown
730	YPD-SOV-FO-UIK-C	8.65E-04	1.03E-05	168	Yellow UIK Close Pilot Valve Fails to Open	OREDA-97, 4.4, Act. Device, control unit, others, unknown
731	YPD-SOV-FO-UIK-O	8.65E-04	1.03E-05	168	Yellow Open UIK Pilot Valve Fails to Open	OREDA-97, 4.4, Act. Device, control unit, others, unknown
732	YPD-SOV-FO-UOC-C	8.65E-04	1.03E-05	168	Yellow UOC Close Pilot Valve Fails to Open	OREDA-97, 4.4, Act. Device, control unit, others, unknown
733	YPD-SOV-FO-UOC-O	8.65E-04	1.03E-05	168	Yellow Open UOC Pilot Valve Fails to Open	OREDA-97, 4.4, Act. Device, control unit, others, unknown
734	YPD-SOV-FO-UOK-C	8.65E-04	1.03E-05	168	Yellow UOK Close Pilot Valve Fails to Open	OREDA-97, 4.4, Act. Device, control unit, others, unknown
735	YPD-SOV-FO-UOK-O	8.65E-04	1.03E-05	168	Yellow Open UOK Pilot Valve Fails to Open	OREDA-97, 4.4, Act. Device, control unit, others, unknown
736	YPD-SOV-FO-UPR	8.65E-04	1.03E-05	168	Yellow Upper Pipe Ram Pilot Valve Fails to Open	OREDA-97, 4.4, Act. Device, control unit, others, unknown
737	YPD-SOV-FO-USRHP	8.65E-04	1.03E-05	168	Yellow UHP Shear Pilot Valve Fails to Open	OREDA-97, 4.4, Act. Device, control unit, others, unknown
738	YPD-SOV-FO-USRNP	8.65E-04	1.03E-05	168	Yellow Blind Shear Ram Pilot Valve Fails to Open	OREDA-97, 4.4, Act. Device, control unit, others, unknown
739	YPD-SOV-FO-YSSUP	8.65E-04	1.03E-05	168	Yell. Pod Yell. Solnd Supp. Pilot Valve Fails to Open	OREDA-97, 4.4, Act. Device, control unit, others, unknown
740	YPD-SOV-SO-ADUMP	2.80E-05	2.33E-06	24	Spurious Opening of Yellow Accum. Dump Pilot Valve	OREDA-97, SPO=4.41%
741	YPD-SOV-SO-LAPRVT	2.80E-05	2.33E-06	24	Spurious Opening of LA Reg. Pilot Vent Valve	OREDA-97, SPO=4.41%
742	YPD-SOV-SO-LPRVT	2.80E-05	2.33E-06	24	Spurious Opening of LMRP Connector Reg. Pilot Vent Valve	OREDA-97, SPO=4.41%
743	YPD-SOV-SO-MPRVT	2.80E-05	2.33E-06	24	Spurious Opening of Pod Man. Reg. Pilot Vent Valve	OREDA-97, SPO=4.41%
744	YPD-SOV-SO-UAPRVT	2.80E-05	2.33E-06	24	Spurious Opening of UA Reg. Pilot Vent Valve	OREDA-97, SPO=4.41%

Confidential Treatment Requested by Transocean Holdings LLC

TRN-HCEC-00056803

Table B-2: Common Cause Failure Event Calculations

Basic Event Name	Basic Event Description	Template Event	Individual UA	Beta (2)	Gamma (3)	Delta (4+)	CCF UA
BPD-CPU-CC-CPU2	CCF of Blue Pod CPU Boards	CPU-CCF2	1.31E-06	0.07			9.17E-08
CDA-CPU-CC-CPU2	CCF of Comm./ Power Dist Panel A CPU Boards	CPU-CCF2	1.31E-06	0.07			9.17E-08
CDB-CPU-CC-CPU2	CCF of Comm./ Power Dist Panel B CPU Boards	CPU-CCF2	1.31E-06	0.07			9.17E-08
CDP-CPU-CC-CPU4	CCF of Comm./ Power Dist Panel A&B CPUs	CPU-CCF4	1.31E-06	0.07	0.2	0.7	1.28E-08
DP-CPU-CC-CPU2	CCF of DP Panel CPU Boards	CPU-CCF2	1.31E-06	0.07			9.17E-08
TPP-CPU-CC-CPU2	CCF of TPP Panel CPU Boards	CPU-CCF2	1.31E-06	0.07			9.17E-08
CP-CPU-CC-CPU4	CCF of DP&TPP Panel CPU Boards	CPU-CCF4	1.31E-06	0.07	0.2	0.7	1.28E-08
POD-CPU-CC-CPU4	CCF of Blue and Yellow Pod CPU Boards	CPU-CCF4	1.31E-06	0.07	0.2	0.7	1.28E-08
YPD-CPU-CC-CPU2	CCF of Yellow Pod CPU Boards	CPU-CCF2	1.31E-06	0.07			9.17E-08
BPD-FUS-CC-FUS2	CCF of Blue Pod Fuses	FUSE-CCF2	1.00E-08	0.07			7.00E-10
CDA-FUS-CC-FUS2	CCF of Comm./ Power Dist Panel A Fuses	FUSE-CCF2	1.00E-08	0.07			7.00E-10
CDB-FUS-CC-FUS2	CCF of Comm./ Power Dist Panel B Fuses	FUSE-CCF2	1.00E-08	0.07			7.00E-10
CDP-FUS-CC-FUS4	CCF of Comm./ Power Dist Panel A&B Fuses	FUSE-CCF4	1.00E-08	0.07	0.2	0.7	9.80E-11
DP-FUS-CC-FUS2	CCF of DP Panel Fuses	FUSE-CCF2	1.00E-08	0.07			7.00E-10
TPP-FUS-CC-FUS2	CCF of TPP Panel Fuses	FUSE-CCF2	1.00E-08	0.07			7.00E-10
CP-FUS-CC-FUS4	CCF of DP&TPP Panel Fuses	FUSE-CCF4	1.00E-08	0.07	0.2	0.7	9.80E-11
OPR-FUS-CC-FUS6	CCF of All Control Panel Fuses	FUSE-CCF6	1.00E-08	0.07	0.2	0.56	7.84E-11
POD-FUS-CC-FUS4	CCF of Blue and Yellow Pod Fuses	FUSE-CCF4	1.00E-08	0.07	0.2	0.7	9.80E-11
CWS-FUS-CC-FUS2	CCF of CCU Workstation Fuses	FUSE-CCF2	1.00E-08	0.07			7.00E-10
YPD-FUS-CC-FUS2	CCF of Yellow Pod Fuses	FUSE-CCF2	1.00E-08	0.07			7.00E-10
BPD-MOD-CC-MODM2	CCF of Blue Pod Modems	MODEM-CCF2	5.00E-04	0.07			3.50E-05
CDA-MOD-CC-MODM2	CCF of Comm./Power Dist Panel A Modems	MODEM-CCF2	5.00E-04	0.07			3.50E-05
CDB-MOD-CC-MODM2	CCF of Comm./Power Dist Panel B Modems	MODEM-CCF2	5.00E-04	0.07			3.50E-05
CDP-MOD-CC-MODM4	CCF of Comm./ Power Dist Panel A&B Modems	MODEM-CCF4	5.00E-04	0.07	0.2	0.7	4.90E-06
POD-MOD-CC-MODM4	CCF of Blue and Yellow Pod Modems	MODEM-CCF4	5.00E-04	0.07	0.2	0.7	4.90E-06
YPD-MOD-CC-MODM2	CCF of Yellow Pod Modems	MODEM-CCF2	5.00E-04	0.07			3.50E-05
BPD-PSP-CC-PSP2	CCF of Blue Pod Power Supplies	PSP-CCF2	1.45E-05	0.07			1.02E-06
CDA-PSP-CC-PSP2	CCF of Comm./ Power Dist Panel A Power Supplies	PSP-CCF2	1.45E-05	0.07			1.02E-06
CDB-PSP-CC-PSP2	CCF of Comm./ Power Dist Panel B Power Supplies	PSP-CCF2	1.45E-05	0.07			1.02E-06
CDP-PSP-CC-PSP4	CCF of Comm./ Pwr Dist Panel A&B Pwr Supp.	PSP-CCF4	1.45E-05	0.07	0.2	0.7	1.42E-07
DP-PSP-CC-PSP2	CCF of DP Panel Power Supplies	PSP-CCF2	1.45E-05	0.07			1.02E-06
TPP-PSP-CC-PSP2	CCF of TPP Panel Power Supplies	PSP-CCF2	1.45E-05	0.07			1.02E-06
CP-PSP-CC-PSP4	CCF of DP&TPP Panel Power Supplies	PSP-CCF4	1.45E-05	0.07	0.2	0.7	1.42E-07
OPR-PSP-CC-PSP6	CCF of All Control Panel Power Supplies	PSP-CCF6	1.45E-05	0.07	0.2	0.56	1.14E-07
POD-PSP-CC-PSP4	CCF of Blue and Yellow Pod Power Supplies	PSP-CCF4	1.45E-05	0.07	0.2	0.7	1.42E-07
CWS-PSP-CC-PSP2	CCF of CCU Workstation Power Supplies	PSP-CCF2	1.45E-05	0.07			1.02E-06
YPD-PSP-CC-PSP2	CCF of Yellow Pod Power Supplies	PSP-CCF2	1.45E-05	0.07			1.02E-06

Confidential Treatment Requested by Transocean Holdings LLC

TRN-HCEC-00056804

Table B-3: Template Event Parameters

Template Identifier	UA	Lambda (/Hr)	Tau (Hrs)	Data Description
ACC-ACTIVE	1.92E-05	1.60E-06	2.40E+01	OREDA-92, 5.3.1, Ruptured pressure lines/accumulators
ACC-PRE	1.00E-03	—E—	—E—	Estimate
ACC-STBY	4.04E-04	1.60E-06	1.68E+02	OREDA-92, 5.3.1, Ruptured pressure lines/accumulators
BATTERY	4.12E-02	2.90E-05	2.92E+03	OREDA-92, 4.2.5, All Modes
BHEP	3.00E-03	—E—	—E—	Basic Human Error Probability
BREAKER-ACTIVE	8.00E-07	1.60E-06	1.00E+00	Breaker spurious ops, OREDA-92, 4.2.6.1
BUS	1.00E-05	—E—	—E—	Estimate
CABLE-ACTIVE	3.81E-06	7.62E-06	1.00E+00	OREDA-97, 5.1.2, 4 failures/5.25E5 hrs
CABLE-STBY	1.92E-03	7.62E-06	1.00E+00	OREDA-97, 5.1.2, 4 failures/5.25E5 hrs
CHECK-ACTIVE	2.50E-05	2.08E-06	2.40E+01	IEEE-500, 11.2.3, Composite, all
CHECK-LT	1.04E-03	2.08E-06	1.00E+03	IEEE-500, 11.2.3, Composite, all
CHECK-STBY	5.24E-04	2.08E-06	1.68E+02	IEEE-500, 11.2.3, Composite, all
CHOKE-KILL-ACTIVE	5.52E-04	4.60E-05	2.40E+01	OREDA-92, 7.5.1.6, all modes
CHOKE-KILL-STANDBY	1.15E-02	4.60E-05	1.68E+02	OREDA-92, 7.5.1.6, all modes
CONN-ACTIVE	1.02E-05	2.05E-05	1.00E+00	OREDA-97, 5.1.2, Control Connectors, 13.04%
CONN-STBY	5.14E-03	2.05E-05	1.00E+00	OREDA-97, 5.1.2, Control Connectors, 13.04%
CPU-BOARD-ACT	1.31E-06	2.62E-06	1.00E+00	CPU Boards, OREDA-97, 4.1 abn. out+fto+part unknown
CPU-BOARD-STBY	6.60E-04	2.62E-06	1.00E+00	CPU Boards, OREDA-97, 4.1 abn. out+fto+part unknown
CPU-CCF2	9.17E-08	—E—	0.00E+00	CPU * 0.07 (Beta)
CPU-CCF4	1.28E-08	—E—	0.00E+00	CPU * 0.07 (Beta) * 0.3 (Gamma) * 0.7 (Delta)
FILTER-ACTIVE	3.60E-04	3.00E-05	2.40E+01	OREDA-92, 5.3.1, Clogged Filter/line
FILTER-STBY	7.52E-03	3.00E-05	1.68E+02	OREDA-92, 5.3.1, Clogged Filter/line
FUSE-ACTIVE	1.00E-08	2.00E-08	1.00E+00	IEEE-500, 3.51, Fuses up to 1000V
FUSE-CCF2	7.00E-10	—E—	0.00E+00	Fuse * 0.07 (Beta)
FUSE-CCF4	9.80E-11	—E—	0.00E+00	Fuse * 0.07 (Beta) * 0.3 (Gamma) * 0.7 (Delta)
FUSE-CCF6	7.84E-11	—E—	0.00E+00	Fuse * 0.07 (Beta) * 0.3 (Gamma) * 0.56 (Delta)
FUSE-STBY	5.04E-06	2.00E-08	1.00E+00	IEEE-500, 3.51, Fuses up to 1000V
HOV-ACTIVE	4.00E-04	3.33E-05	2.40E+01	OREDA-97, 4.4, body/internals, seat, seals, actuator
HOV-LONG-TERM	1.65E-02	3.33E-05	1.00E+03	OREDA-97, 4.4, body/internals, seat, seals, actuator
HOV-STANDBY	8.35E-03	3.33E-05	1.68E+02	OREDA-97, 4.4, body/internals, seat, seals, actuator
HYD-ACT	5.72E-06	1.14E-05	1.00E+00	OREDA-97, 5.1.2, Crit. Hyd. Conn/Line
HYD-STBY	2.88E-03	1.14E-05	1.68E+02	OREDA-97, 5.1.2, Crit. Hyd. Conn/Line
INVERTER	1.30E-05	2.60E-05	1.00E+00	OREDA-92, 4.2.2, All Modes
IO-BOARD-ACT	1.59E-05	3.18E-05	1.00E+00	Input/Output Boards, OREDA-97, 4.1 abn. out+fto+part unknown
IO-BOARD-STBY	7.97E-03	3.18E-05	1.00E+00	Input/Output Boards, OREDA-97, 4.1 abn. out+fto+part unknown
JBOX-ACTIVE	1.50E-08	3.00E-08	1.00E+00	IEEE-500, 9.2 Composite
JBOX-STBY	7.56E-06	3.00E-08	1.00E+00	IEEE-500, 9.2 Composite
MODEM	1.00E-02	—E—	—E—	Estimate
MODEM-CCF2	3.50E-05	—E—	0.00E+00	Modem * 0.07 (Beta)
MODEM-CCF4	4.90E-06	—E—	0.00E+00	Modem * 0.07 (Beta) * 0.3 (Gamma) * 0.7 (Delta)
OLM	1.00E-04	—E—	—E—	Estimate
PILOT-ACTIVE	1.24E-04	1.03E-05	2.40E+01	OREDA-97, 4.4, Act. Device, control unit, others, unknown
PILOT-STANDBY	2.59E-03	1.03E-05	1.68E+02	OREDA-97, 4.4, Act. Device, control unit, others, unknown
PLC-SO	7.30E-05	1.46E-04	1.00E+00	OREDA-97, 4.1.2, PLC Spurious Operation
PLUG-ACTIVE	1.13E-05	9.44E-07	2.40E+01	OREDA-97, 4.4, Plug valve body/internals, seat,1.79% Total
PS-ACTIVE	1.45E-05	2.90E-05	1.00E+00	Power Supply, OREDA-92, 5.5.2
PS-STBY	7.27E-03	2.90E-05	1.00E+00	Power Supply, OREDA-92, 5.5.2
PSP-CCF2	1.02E-06	—E—	0.00E+00	Power Supply * 0.07 (Beta)
PSP-CCF4	1.42E-07	—E—	0.00E+00	Power Supply * 0.07 (Beta) * 0.3 (Gamma) * 0.7 (Delta)
PSP-CCF6	1.14E-07	—E—	0.00E+00	Power Supply * 0.07 (Beta) * 0.3 (Gamma) * 0.56 (Delta)
REG-ACTIVE	1.32E-06	1.10E-07	2.40E+01	IEEE-500, 8.25.6

Confidential Treatment Requested by Transocean Holdings LLC TRN-HCEC-00056805

Table B-3: Template Event Parameters (continued)

REG-STBY	2.77E-05	1.10E-07	1.68E+02	IEEE-500, 8.25.6
SHIP-POWER	2.66E-04	5.32E-04	1.00E+00	OREDA-97, 2.1.1.2, All Modes
SHUTTLE-ACTIVE	2.50E-05	2.08E-06	2.40E+01	IEEE-11.2.3, Composite, all
SHUTTLE-LONG-TERM	1.04E-03	2.08E-06	1.00E+03	IEEE-11.2.3, Composite, all
SHUTTLE-STBY	5.24E-04	2.08E-06	1.68E+02	IEEE-11.2.3, Composite, all
SOFTWARE	1.97E-06	3.94E-06	1.00E+00	OREDA-97, 4.1, Sys/Application Software, ABO/FTO
SPURIOUS-OPS	2.80E-05	2.33E-06	2.40E+01	OREDA-97, SPO=4.41%
SWITCH-ACTIVE	8.28E-06	6.90E-07	2.40E+01	IEEE-500, 8.22.15
SWITCH-LONG-TERM	3.45E-04	6.90E-07	1.00E+03	IEEE-500, 8.22.15
SWITCH-STANDBY	1.74E-04	6.90E-07	2.40E+01	IEEE-500, 8.22.15
SWITCH-STERM	3.45E-07	6.90E-07	1.00E+00	IEEE-500, 8.22.15
XFMR	1.45E-06	2.90E-06	1.00E+00	OREDA-92, 4.2.1.1, Transformers 221V-440V

Confidential Treatment Requested by Transocean Holdings LLC TRN-HCEC-00056806

Table B-4: Event Naming Scheme

Format - AAA-BBB-CC-ZZZZZ

AAA	System
BPD	Blue Pod
CDA	Communication/Power Distribution Panel A
CDB	Communication/Power Distribution Panel B
CDP	Communication/Power Distribution Panels
EHY	Electro-Hydraulic System
OI1	OIM/Subsea Engineers Control Panel 1
OI2	OIM/Subsea Engineers Control Panel 2
OPR	Operator
POD	Subsea Pods/Components
TSP	Touch Screen Panel
UPS	Uninterruptible Power
YPD	Yellow Pod

CC	Failure Mode
FC	Fails to Close
FO	Fails to Open
FR	Fails to Respond
FT	Fails to Transfer
LF	Loss of Function
LK	Leak
LO	Low Output
PB	Loss of Pressure Boundary
PL	Plugged
RO	Fail to Remain Open
SO	Spurious Operation
UA	Unavailable

BBB	Component Type
ACC	Accumulator
BAT	Battery
BKR	Breaker
BRD	PLC/Computer Board
BUS	Computer Bus, Power Bus
CBL	Cable
CDT	Conduit
CHK	Check Valve
CKV	Choke/Kill Valves
CON	Cable Connector, Other Connect.
CPU	CPU Board
FTR	Filter
FUS	Fuse
HOV	Hydraulic Operated Valve
INV	Inverter/Battery Charger
ISO	Isometer
MOD	Modem
OLM	Optical Link Module
PLC	Programmable Logic Controller
PSP	Power Supply
REG	Regulator
SCR	Touch Screen
RAM	Shear/Pipe Ram
SHV	Shuttle Valve
SOF	Software
SOV	Solenoid Operated Valve
SWT	Switch
XFM	Transformer
XHE	Human Error

Confidential Treatment Requested by Transocean Holdings LLC TRN-HCEC-00056807

Appendix C

Cutset Listings

1-EDS Cutsets - Failure to Perform EDS

Cutset Total: 3.12E-04

Cutset No.	Cumulative % Total	Ind. Cutset %	Frequency	Cut Set Terms
1	56.0	56.0	1.75E-04	EHY-SHV-LF-USR-F
2	60.7	4.8	1.49E-05	EHY-CKV-FC-UIC * EHY-CKV-FC-UOC
3	65.5	4.8	1.49E-05	EHY-CKV-FC-LIK * EHY-CKV-FC-LOK
4	70.3	4.8	1.49E-05	EHY-CKV-FC-LIC * EHY-CKV-FC-LOC
5	75.0	4.8	1.49E-05	EHY-CKV-FC-UIK * EHY-CKV-FC-UOK
6	78.2	3.2	1.00E-05	INDICATE-EDS
7	81.5	3.2	1.00E-05	OPR-XHE-FO-EDS
8	84.3	2.8	8.74E-06	EHY-SHV-LF-CSR-F * POD-RAM-LF-CASNG
9	85.8	1.6	4.90E-06	CDP-MOD-CC-MODM4
10	87.4	1.6	4.90E-06	POD-MOD-CC-MODM4
11	88.4	1.0	3.00E-06	BPD-ACC-UA-MANPI * OPR-XHE-FT-YPOD
12	89.3	1.0	3.00E-06	BPD-ACC-UA-PSREG * OPR-XHE-FT-YPOD
13	90.0	0.6	1.97E-06	POD-SOF-LF-ERROR
14	90.6	0.6	1.97E-06	CDP-SOF-LF-ERROR
15	91.0	0.4	1.08E-06	EHY-SHV-LF-PDISR * EHY-SHV-LF-SDIS1
16	91.3	0.4	1.08E-06	EHY-SHV-LF-PDISR * EHY-SHV-LF-SDISR
17	91.7	0.4	1.08E-06	EHY-SHV-LF-PDISR * EHY-SHV-LF-SDIS2
18	92.0	0.4	1.08E-06	EHY-SHV-LF-PDIS1 * EHY-SHV-LF-SDIS1
19	92.4	0.4	1.08E-06	EHY-SHV-LF-PDIS2 * EHY-SHV-LF-SDIS1
20	92.7	0.4	1.08E-06	EHY-SHV-LF-PDIS1 * EHY-SHV-LF-SDISR
21	93.1	0.4	1.08E-06	EHY-SHV-LF-PDIS2 * EHY-SHV-LF-SDISR
22	93.4	0.4	1.08E-06	EHY-SHV-LF-PDIS1 * EHY-SHV-LF-SDIS2
23	93.8	0.4	1.08E-06	EHY-SHV-LF-PDIS2 * EHY-SHV-LF-SDIS2
24	94.1	0.3	1.00E-06	BPD-ACC-UA-PSREG * YPD-ACC-UA-PSREG
25	94.4	0.3	1.00E-06	BPD-ACC-UA-MANPI * YPD-ACC-UA-MANPI
26	94.7	0.3	8.14E-07	BPD-HOV-FO-PDISC * BPD-HOV-FO-SDISC * OPR-XHE-FT-YPOD
27	94.9	0.2	6.73E-07	EHY-CKV-FC-LOC * EHY-SHV-LF-LIC-O
28	95.1	0.2	6.73E-07	EHY-CKV-FC-LIC * EHY-SHV-LF-LOC-O
29	95.3	0.2	6.73E-07	EHY-CKV-FC-UOC * EHY-SHV-LF-UIC-O
30	95.6	0.2	6.73E-07	EHY-CKV-FC-LOK * EHY-SHV-LF-LIK-O
31	95.8	0.2	6.73E-07	EHY-CKV-FC-LIK * EHY-SHV-LF-LOK-O
32	96.0	0.2	6.73E-07	EHY-CKV-FC-UIC * EHY-SHV-LF-UOC-O
33	96.2	0.2	6.73E-07	EHY-CKV-FC-UOK * EHY-SHV-LF-UIK-O
34	96.5	0.2	6.73E-07	EHY-CKV-FC-UIK * EHY-SHV-LF-UOK-O
35	96.6	0.2	4.88E-07	EHY-HOV-FO-BSRHP * EHY-SHV-LF-USRNR
36	96.7	0.1	3.71E-07	EHY-SOV-RO-BPSELB * OPR-XHE-FT-YPOD
37	96.8	0.1	2.82E-07	BPD-HOV-FO-PDISC * EHY-SHV-LF-SDIS1 * YPD-HOV-FO-PDISC
38	96.9	0.1	2.82E-07	BPD-HOV-FO-PDISC * EHY-SHV-LF-SDISR * YPD-HOV-FO-PDISC
39	97.0	0.1	2.82E-07	BPD-HOV-FO-SDISC * EHY-SHV-LF-PDISR * YPD-HOV-FO-SDISC
40	97.1	0.1	2.82E-07	BPD-HOV-FO-PDISC * EHY-SHV-LF-SDIS2 * YPD-HOV-

Confidential Treatment Requested by Transocean Holdings LLC TRN-HCEC-00056809

Cutset No.	Cumulative % Total	Ind. Cutset %	Frequency	Cut Set Terms
				FO-PDISC
41	97.2	0.1	2.82E-07	BPD-HOV-FO-SDISC * EHY-SHV-LF-PDIS2 * YPD-HOV-FO-SDISC
42	97.3	0.1	2.82E-07	BPD-HOV-FO-SDISC * EHY-SHV-LF-PDIS1 * YPD-HOV-FO-SDISC
43	97.4	0.1	2.71E-07	BPD-ACC-UA-PSREG * YPD-HOV-FO-PDISC * YPD-HOV-FO-SDISC
44	97.5	0.1	2.71E-07	BPD-HOV-FO-PDISC * BPD-HOV-FO-SDISC * YPD-ACC-UA-PSREG
45	97.6	0.1	2.70E-07	BPD-CON-LK-PIE * OPR-XHE-FT-YPOD
46	97.7	0.1	2.51E-07	BPD-CON-LK-PIE * EHY-HOV-FO-YPSUP
47	97.7	0.1	2.19E-07	BPD-PLC-SO-MPRVT * OPR-XHE-FT-YPOD
48	97.8	0.1	2.19E-07	BPD-PLC-SO-LPRVT * OPR-XHE-FT-YPOD
49	97.9	0.1	1.42E-07	CDP-PSP-CC-PSP4
50	97.9	0.1	1.42E-07	POD-PSP-CC-PSP4
51	98.0	0.1	1.34E-07	BPD-ACC-UA-PSREG * YPD-ACC-PB-PSREG
52	98.0	0.1	1.34E-07	BPD-ACC-UA-MANPI * YPD-ACC-PB-MANPI
53	98.1	0.0	1.24E-07	EHY-SOV-RO-BPSELB * YPD-ACC-UA-PSREG
54	98.1	0.0	1.24E-07	EHY-SOV-RO-BPSELB * YPD-ACC-UA-MANPI
55	98.1	0.0	1.14E-07	OPR-PSP-CC-PSP6
56	98.2	0.0	1.05E-07	BPD-MOD-CC-MODM2 * OPR-XHE-FT-YPOD
57	98.2	0.0	9.77E-08	BPD-MOD-CC-MODM2 * EHY-HOV-FO-YPSUP
58	98.3	0.0	9.00E-08	BPD-CON-LK-PIE * YPD-ACC-UA-PSREG
59	98.3	0.0	9.00E-08	BPD-CON-LK-PIE * YPD-ACC-UA-MANPI
60	98.3	0.0	9.00E-08	BPD-ACC-UA-MANPI * YPD-CON-LK-PIE
61	98.4	0.0	9.00E-08	BPD-ACC-UA-PSREG * YPD-CON-LK-PIE
62	98.4	0.0	8.39E-08	BPD-SOV-SO-MPRVT * OPR-XHE-FT-YPOD
63	98.4	0.0	8.39E-08	BPD-SOV-SO-LPRVT * OPR-XHE-FT-YPOD
64	98.5	0.0	8.39E-08	EHY-PCV-SO-BPSEL * OPR-XHE-FT-YPOD
65	98.5	0.0	8.05E-08	BPD-CON-LF-OPNFC * BPD-CON-LF-UNPLG * OPR-XHE-FT-YPOD
66	98.5	0.0	7.78E-08	BPD-CON-LK-PIE * EHY-SOV-LF-YPSELY
67	98.5	0.0	7.78E-08	BPD-CON-LK-PIE * YPD-SOV-FO-YSSUP
68	98.6	0.0	7.50E-08	BPD-CON-LF-OPNFC * BPD-CON-LF-UNPLG * EHY-HOV-FO-YPSUP
69	98.6	0.0	7.35E-08	BPD-HOV-FO-PDISC * BPD-HOV-FO-SDISC * YPD-HOV-FO-PDISC * YPD-HOV-FO-SDISC
70	98.6	0.0	7.30E-08	BPD-PLC-SO-LPRVT * YPD-ACC-UA-PSREG
71	98.7	0.0	7.30E-08	BPD-PLC-SO-MPRVT * YPD-ACC-UA-MANPI
72	98.7	0.0	7.30E-08	BPD-ACC-UA-MANPI * YPD-PLC-SO-MPRVT
73	98.7	0.0	7.30E-08	BPD-ACC-UA-PSREG * YPD-PLC-SO-LPRVT
74	98.7	0.0	5.76E-08	BPD-ACC-PB-MANPI * OPR-XHE-FT-YPOD
75	98.8	0.0	5.76E-08	BPD-ACC-PB-PSREG * OPR-XHE-FT-YPOD
76	98.8	0.0	5.73E-08	BPD-HOV-LF-UIK * EHY-CKV-FC-UOK * YPD-HOV-LF-UIK
77	98.8	0.0	5.73E-08	BPD-HOV-LF-UOK * EHY-CKV-FC-UIK * YPD-HOV-LF-UOK
78	98.8	0.0	5.73E-08	BPD-HOV-LF-LIC * EHY-CKV-FC-LOC * YPD-HOV-LF-LIC
79	98.9	0.0	5.73E-08	BPD-HOV-LF-LOC * EHY-CKV-FC-LIC * YPD-HOV-LF-LOC
80	98.9	0.0	5.73E-08	BPD-HOV-LF-UIC * EHY-CKV-FC-UOC * YPD-HOV-LF-UIC

Confidential Treatment Requested by Transocean Holdings LLC TRN-HCEC-00056810

Cutset No.	Cumulative % Total	Ind. Cutset %	Frequency	Cut Set Terms
81	98.9	0.0	5.73E-08	BPD-HOV-LF-UOC * EHY-CKV-FC-UIC * YPD-HOV-LF-UOC
82	98.9	0.0	5.73E-08	BPD-HOV-LF-LIK * EHY-CKV-FC-LOK * YPD-HOV-LF-LIK
83	98.9	0.0	5.73E-08	BPD-HOV-LF-LOK * EHY-CKV-FC-LIK * YPD-HOV-LF-LOK
84	99.0	0.0	5.13E-08	BPD-HOV-FO-PDISC * EHY-SHV-LF-SDIS1 * OPR-XHE-FT-YPOD
85	99.0	0.0	5.13E-08	BPD-HOV-FO-PDISC * EHY-SHV-LF-SDISR * OPR-XHE-FT-YPOD
86	99.0	0.0	5.13E-08	BPD-HOV-FO-SDISC * EHY-SHV-LF-PDISR * OPR-XHE-FT-YPOD
87	99.0	0.0	5.13E-08	BPD-HOV-FO-PDISC * EHY-SHV-LF-SDIS2 * OPR-XHE-FT-YPOD
88	99.1	0.0	5.13E-08	BPD-HOV-FO-SDISC * EHY-SHV-LF-PDIS2 * OPR-XHE-FT-YPOD
89	99.1	0.0	5.13E-08	BPD-HOV-FO-SDISC * EHY-SHV-LF-PDIS1 * OPR-XHE-FT-YPOD
90	99.1	0.0	4.46E-08	BPD-HOV-LF-UIK * EHY-CKV-FC-UOK * OPR-XHE-FT-YPOD
91	99.1	0.0	4.46E-08	BPD-HOV-LF-UIK * BPD-HOV-LF-UOK * OPR-XHE-FT-YPOD
92	99.1	0.0	4.46E-08	BPD-HOV-LF-UOK * EHY-CKV-FC-UIK * OPR-XHE-FT-YPOD
93	99.2	0.0	4.46E-08	BPD-HOV-LF-LIC * BPD-HOV-LF-LOC * OPR-XHE-FT-YPOD
94	99.2	0.0	4.46E-08	BPD-HOV-LF-LIC * EHY-CKV-FC-LOC * OPR-XHE-FT-YPOD
95	99.2	0.0	4.46E-08	BPD-HOV-LF-LOC * EHY-CKV-FC-LIC * OPR-XHE-FT-YPOD
96	99.2	0.0	4.46E-08	BPD-HOV-LF-UIC * BPD-HOV-LF-UOC * OPR-XHE-FT-YPOD
97	99.2	0.0	4.46E-08	BPD-HOV-LF-UIC * EHY-CKV-FC-UOC * OPR-XHE-FT-YPOD
98	99.3	0.0	4.46E-08	BPD-HOV-LF-UOC * EHY-CKV-FC-UIC * OPR-XHE-FT-YPOD
99	99.3	0.0	4.46E-08	BPD-HOV-LF-LIK * EHY-CKV-FC-LOK * OPR-XHE-FT-YPOD
100	99.3	0.0	4.46E-08	BPD-HOV-LF-LIK * BPD-HOV-LF-LOK * OPR-XHE-FT-YPOD

Confidential Treatment Requested by Transocean Holdings LLC TRN-HCEC-00056811

C-CHOKE - Failure to Close Choke Lines for EDS

Cutset Total: 3.32E-05

Cutset No.	Cumulative % Total	Ind. Cutset %	Frequency	Cut Set Terms
1	44.8	44.8	1.49E-05	EHY-CKV-FC-UIC * EHY-CKV-FC-UOC
2	89.5	44.8	1.49E-05	EHY-CKV-FC-LIC * EHY-CKV-FC-LOC
3	91.6	2.0	6.73E-07	EHY-CKV-FC-LOC * EHY-SHV-LF-LIC-O
4	93.6	2.0	6.73E-07	EHY-CKV-FC-LIC * EHY-SHV-LF-LOC-O
5	95.6	2.0	6.73E-07	EHY-CKV-FC-UOC * EHY-SHV-LF-UIC-O
6	97.7	2.0	6.73E-07	EHY-CKV-FC-UIC * EHY-SHV-LF-UOC-O
7	97.9	0.2	5.73E-08	BPD-HOV-LF-LIC * EHY-CKV-FC-LOC * YPD-HOV-LF-LIC
8	98.0	0.2	5.73E-08	BPD-HOV-LF-LOC * EHY-CKV-FC-LIC * YPD-HOV-LF-LOC
9	98.2	0.2	5.73E-08	BPD-HOV-LF-UIC * EHY-CKV-FC-UOC * YPD-HOV-LF-UIC
10	98.4	0.2	5.73E-08	BPD-HOV-LF-UOC * EHY-CKV-FC-UIC * YPD-HOV-LF-UOC
11	98.5	0.1	4.46E-08	BPD-HOV-LF-LIC * BPD-HOV-LF-LOC * OPR-XHE-FT-YPOD
12	98.7	0.1	4.46E-08	BPD-HOV-LF-LIC * EHY-CKV-FC-LOC * OPR-XHE-FT-YPOD
13	98.8	0.1	4.46E-08	BPD-HOV-LF-LOC * EHY-CKV-FC-LIC * OPR-XHE-FT-YPOD
14	98.9	0.1	4.46E-08	BPD-HOV-LF-UIC * BPD-HOV-LF-UOC * OPR-XHE-FT-YPOD
15	99.1	0.1	4.46E-08	BPD-HOV-LF-UIC * EHY-CKV-FC-UOC * OPR-XHE-FT-YPOD
16	99.2	0.1	4.46E-08	BPD-HOV-LF-UOC * EHY-CKV-FC-UIC * OPR-XHE-FT-YPOD
17	99.3	0.1	3.05E-08	EHY-SHV-LF-LIC-O * EHY-SHV-LF-LOC-O
18	99.4	0.1	3.05E-08	EHY-SHV-LF-UIC-O * EHY-SHV-LF-UOC-O
19	99.5	0.0	1.28E-08	BPD-HOV-LF-LIC * EHY-CKV-FC-LOC * YPD-SOV-FC-LIC-O
20	99.5	0.0	1.28E-08	BPD-SOV-FC-LIC-O * EHY-CKV-FC-LOC * YPD-HOV-LF-LIC
21	99.6	0.0	1.28E-08	BPD-HOV-LF-LOC * EHY-CKV-FC-LIC * YPD-SOV-FC-LOC-O
22	99.6	0.0	1.28E-08	BPD-SOV-FC-LOC-O * EHY-CKV-FC-LIC * YPD-HOV-LF-LOC
23	99.6	0.0	1.28E-08	BPD-HOV-LF-UIC * EHY-CKV-FC-UOC * YPD-SOV-FC-UIC-O
24	99.7	0.0	1.28E-08	BPD-SOV-FC-UIC-O * EHY-CKV-FC-UOC * YPD-HOV-LF-UIC
25	99.7	0.0	1.28E-08	BPD-HOV-LF-UOC * EHY-CKV-FC-UIC * YPD-SOV-FC-UOC-O
26	99.8	0.0	1.28E-08	BPD-SOV-FC-UOC-O * EHY-CKV-FC-UIC * YPD-HOV-LF-UOC
27	99.8	0.0	1.00E-08	BPD-HOV-LF-LIC * BPD-SOV-FC-LOC-O * OPR-XHE-FT-YPOD
28	99.8	0.0	1.00E-08	BPD-SOV-FC-LIC-O * EHY-CKV-FC-LOC * OPR-XHE-FT-YPOD

Confidential Treatment Requested by Transocean Holdings LLC TRN-HCEC-00056812

29	99.9	0.0	1.00E-08	BPD-HOV-LF-LOC * BPD-SOV-FC-LIC-O * OPR-XHE-FT-YPOD
30	99.9	0.0	1.00E-08	BPD-SOV-FC-LOC-O * EHY-CKV-FC-LIC * OPR-XHE-FT-YPOD
31	99.9	0.0	1.00E-08	BPD-HOV-LF-UIC * BPD-SOV-FC-UOC-O * OPR-XHE-FT-YPOD
32	100.0	0.0	1.00E-08	BPD-SOV-FC-UIC-O * EHY-CKV-FC-UOC * OPR-XHE-FT-YPOD
33	100.0	0.0	1.00E-08	BPD-HOV-LF-UOC * BPD-SOV-FC-UIC-O * OPR-XHE-FT-YPOD
34	100.0	0.0	1.00E-08	BPD-SOV-FC-UOC-O * EHY-CKV-FC-UIC * OPR-XHE-FT-YPOD
35	100.0	0.0	2.88E-09	BPD-SOV-FC-LIC-O * EHY-CKV-FC-LOC * YPD-SOV-FC-LIC-O
36	100.0	0.0	2.88E-09	BPD-SOV-FC-LOC-O * EHY-CKV-FC-LIC * YPD-SOV-FC-LOC-O
37	100.0	0.0	2.88E-09	BPD-SOV-FC-UIC-O * EHY-CKV-FC-UOC * YPD-SOV-FC-UIC-O
38	100.0	0.0	2.88E-09	BPD-SOV-FC-UOC-O * EHY-CKV-FC-UIC * YPD-SOV-FC-UOC-O
39	100.0	0.0	2.60E-09	BPD-HOV-LF-LIC * EHY-SHV-LF-LOC-O * YPD-HOV-LF-LIC
40	100.0	0.0	2.60E-09	BPD-HOV-LF-LOC * EHY-SHV-LF-LIC-O * YPD-HOV-LF-LOC
41	100.0	0.0	2.60E-09	BPD-HOV-LF-UIC * EHY-SHV-LF-UOC-O * YPD-HOV-LF-UIC
42	100.0	0.0	2.60E-09	BPD-HOV-LF-UOC * EHY-SHV-LF-UIC-O * YPD-HOV-LF-UOC
43	100.0	0.0	2.24E-09	BPD-SOV-FC-LIC-O * BPD-SOV-FC-LOC-O * OPR-XHE-FT-YPOD
44	100.0	0.0	2.24E-09	BPD-SOV-FC-UIC-O * BPD-SOV-FC-UOC-O * OPR-XHE-FT-YPOD
45	100.0	0.0	2.02E-09	BPD-HOV-LF-LIC * EHY-SHV-LF-LOC-O * OPR-XHE-FT-YPOD
46	100.0	0.0	2.02E-09	BPD-HOV-LF-LOC * EHY-SHV-LF-LIC-O * OPR-XHE-FT-YPOD
47	100.0	0.0	2.02E-09	BPD-HOV-LF-UIC * EHY-SHV-LF-UOC-O * OPR-XHE-FT-YPOD
48	100.0	0.0	2.02E-09	BPD-HOV-LF-UOC * EHY-SHV-LF-UIC-O * OPR-XHE-FT-YPOD
49	100.0	0.0	5.82E-10	BPD-HOV-LF-LIC * EHY-SHV-LF-LOC-O * YPD-SOV-FC-LIC-O
50	100.0	0.0	5.82E-10	BPD-SOV-FC-LIC-O * EHY-SHV-LF-LOC-O * YPD-HOV-LF-LIC
51	100.0	0.0	5.82E-10	BPD-HOV-LF-LOC * EHY-SHV-LF-LIC-O * YPD-SOV-FC-LOC-O
52	100.0	0.0	5.82E-10	BPD-SOV-FC-LOC-O * EHY-SHV-LF-LIC-O * YPD-HOV-LF-LOC
53	100.0	0.0	5.82E-10	BPD-HOV-LF-UIC * EHY-SHV-LF-UOC-O * YPD-SOV-FC-UIC-O
54	100.0	0.0	5.82E-10	BPD-SOV-FC-UIC-O * EHY-SHV-LF-UOC-O * YPD-HOV-LF-UIC
55	100.0	0.0	5.82E-10	BPD-HOV-LF-UOC * EHY-SHV-LF-UIC-O * YPD-SOV-FC-UOC-O
56	100.0	0.0	5.82E-10	BPD-SOV-FC-UOC-O * EHY-SHV-LF-UIC-O * YPD-HOV-LF-

Confidential Treatment Requested by Transocean Holdings LLC TRN-HCEC-00056813

				UOC
57	100.0	0.0	4.53E-10	BPD-SOV-FC-LIC-O * EHY-SHV-LF-LOC-O * OPR-XHE-FT-YPOD
58	100.0	0.0	4.53E-10	BPD-SOV-FC-LOC-O * EHY-SHV-LF-LIC-O * OPR-XHE-FT-YPOD
59	100.0	0.0	4.53E-10	BPD-SOV-FC-UIC-O * EHY-SHV-LF-UOC-O * OPR-XHE-FT-YPOD
60	100.0	0.0	4.53E-10	BPD-SOV-FC-UOC-O * EHY-SHV-LF-UIC-O * OPR-XHE-FT-YPOD
61	100.0	0.0	2.21E-10	BPD-HOV-LF-UIC * BPD-HOV-LF-UOC * YPD-HOV-LF-UIC * YPD-HOV-LF-UOC
62	100.0	0.0	2.21E-10	BPD-HOV-LF-LIC * BPD-HOV-LF-LOC * YPD-HOV-LF-LIC * YPD-HOV-LF-LOC
63	100.0	0.0	1.31E-10	BPD-SOV-FC-LIC-O * EHY-SHV-LF-LOC-O * YPD-SOV-FC-LIC-O
64	100.0	0.0	1.31E-10	BPD-SOV-FC-LOC-O * EHY-SHV-LF-LIC-O * YPD-SOV-FC-LOC-O
65	100.0	0.0	1.31E-10	BPD-SOV-FC-UIC-O * EHY-SHV-LF-UOC-O * YPD-SOV-FC-UIC-O
66	100.0	0.0	1.31E-10	BPD-SOV-FC-UOC-O * EHY-SHV-LF-UIC-O * YPD-SOV-FC-UOC-O

Confidential Treatment Requested by Transocean Holdings LLC TRN-HCEC-00056814

C-KILL - Failure to Close Kill Lines for EDS

Cutset Total: 3.32E-05

Cutset No.	Cumulative % Total	Ind. Cutset %	Frequency	Cut Set Terms
1	44.8	44.8	1.49E-05	EHY-CKV-FC-LIK * EHY-CKV-FC-LOK
2	89.5	44.8	1.49E-05	EHY-CKV-FC-UIK * EHY-CKV-FC-UOK
3	91.6	2.0	6.73E-07	EHY-CKV-FC-LOK * EHY-SHV-LF-LIK-O
4	93.6	2.0	6.73E-07	EHY-CKV-FC-LIK * EHY-SHV-LF-LOK-O
5	95.6	2.0	6.73E-07	EHY-CKV-FC-UOK * EHY-SHV-LF-UIK-O
6	97.7	2.0	6.73E-07	EHY-CKV-FC-UIK * EHY-SHV-LF-UOK-O
7	97.9	0.2	5.73E-08	BPD-HOV-LF-UIK * EHY-CKV-FC-UOK * YPD-HOV-LF-UIK
8	98.0	0.2	5.73E-08	BPD-HOV-LF-UOK * EHY-CKV-FC-UIK * YPD-HOV-LF-UOK
9	98.2	0.2	5.73E-08	BPD-HOV-LF-LIK * EHY-CKV-FC-LOK * YPD-HOV-LF-LIK
10	98.4	0.2	5.73E-08	BPD-HOV-LF-LOK * EHY-CKV-FC-LIK * YPD-HOV-LF-LOK
11	98.5	0.1	4.46E-08	BPD-HOV-LF-UIK * EHY-CKV-FC-UOK * OPR-XHE-FT-YPOD
12	98.7	0.1	4.46E-08	BPD-HOV-LF-UIK * BPD-HOV-LF-UOK * OPR-XHE-FT-YPOD
13	98.8	0.1	4.46E-08	BPD-HOV-LF-UOK * EHY-CKV-FC-UIK * OPR-XHE-FT-YPOD
14	98.9	0.1	4.46E-08	BPD-HOV-LF-LIK * EHY-CKV-FC-LOK * OPR-XHE-FT-YPOD
15	99.1	0.1	4.46E-08	BPD-HOV-LF-LIK * BPD-HOV-LF-LOK * OPR-XHE-FT-YPOD
16	99.2	0.1	4.46E-08	BPD-HOV-LF-LOK * EHY-CKV-FC-LIK * OPR-XHE-FT-YPOD
17	99.3	0.1	3.05E-08	EHY-SHV-LF-LIK-O * EHY-SHV-LF-LOK-O
18	99.4	0.1	3.05E-08	EHY-SHV-LF-UIK-O * EHY-SHV-LF-UOK-O
19	99.5	0.0	1.28E-08	BPD-HOV-LF-UIK * EHY-CKV-FC-UOK * YPD-SOV-FC-UIK-O
20	99.5	0.0	1.28E-08	BPD-SOV-FC-UIK-O * EHY-CKV-FC-UOK * YPD-HOV-LF-UIK
21	99.6	0.0	1.28E-08	BPD-HOV-LF-UOK * EHY-CKV-FC-UIK * YPD-SOV-FC-UOK-O
22	99.6	0.0	1.28E-08	BPD-SOV-FC-UOK-O * EHY-CKV-FC-UIK * YPD-HOV-LF-UOK
23	99.6	0.0	1.28E-08	BPD-HOV-LF-LIK * EHY-CKV-FC-LOK * YPD-SOV-FC-LIK-O
24	99.7	0.0	1.28E-08	BPD-SOV-FC-LIK-O * EHY-CKV-FC-LOK * YPD-HOV-LF-LIK
25	99.7	0.0	1.28E-08	BPD-HOV-LF-LOK * EHY-CKV-FC-LIK * YPD-SOV-FC-LOK-O
26	99.8	0.0	1.28E-08	BPD-SOV-FC-LOK-O * EHY-CKV-FC-LIK * YPD-HOV-LF-LOK
27	99.8	0.0	1.00E-08	BPD-HOV-LF-UIK * BPD-SOV-FC-UOK-O * OPR-XHE-FT-YPOD
28	99.8	0.0	1.00E-08	BPD-SOV-FC-UIK-O * EHY-CKV-FC-UOK * OPR-XHE-FT-YPOD
29	99.9	0.0	1.00E-08	BPD-HOV-LF-UOK * BPD-SOV-FC-UIK-O * OPR-XHE-FT-YPOD
30	99.9	0.0	1.00E-08	BPD-SOV-FC-UOK-O * EHY-CKV-FC-UIK * OPR-XHE-FT-

Confidential Treatment Requested by Transocean Holdings LLC TRN-HCEC-00056815

				YPOD
31	99.9	0.0	1.00E-08	BPD-HOV-LF-LIK * BPD-SOV-FC-LOK-O * OPR-XHE-FT-YPOD
32	100.0	0.0	1.00E-08	BPD-SOV-FC-LIK-O * EHY-CKV-FC-LOK * OPR-XHE-FT-YPOD
33	100.0	0.0	1.00E-08	BPD-HOV-LF-LOK * BPD-SOV-FC-LIK-O * OPR-XHE-FT-YPOD
34	100.0	0.0	1.00E-08	BPD-SOV-FC-LOK-O * EHY-CKV-FC-LIK * OPR-XHE-FT-YPOD
35	100.0	0.0	2.88E-09	BPD-SOV-FC-UIK-O * EHY-CKV-FC-UOK * YPD-SOV-FC-UIK-O
36	100.0	0.0	2.88E-09	BPD-SOV-FC-UOK-O * EHY-CKV-FC-UIK * YPD-SOV-FC-UOK-O
37	100.0	0.0	2.88E-09	BPD-SOV-FC-LIK-O * EHY-CKV-FC-LOK * YPD-SOV-FC-LIK-O
38	100.0	0.0	2.88E-09	BPD-SOV-FC-LOK-O * EHY-CKV-FC-LIK * YPD-SOV-FC-LOK-O
39	100.0	0.0	2.60E-09	BPD-HOV-LF-UIK * EHY-SHV-LF-UOK-O * YPD-HOV-LF-UIK
40	100.0	0.0	2.60E-09	BPD-HOV-LF-UOK * EHY-SHV-LF-UIK-O * YPD-HOV-LF-UOK
41	100.0	0.0	2.60E-09	BPD-HOV-LF-LIK * EHY-SHV-LF-LOK-O * YPD-HOV-LF-LIK
42	100.0	0.0	2.60E-09	BPD-HOV-LF-LOK * EHY-SHV-LF-LIK-O * YPD-HOV-LF-LOK
43	100.0	0.0	2.24E-09	BPD-SOV-FC-UIK-O * BPD-SOV-FC-UOK-O * OPR-XHE-FT-YPOD
44	100.0	0.0	2.24E-09	BPD-SOV-FC-LIK-O * BPD-SOV-FC-LOK-O * OPR-XHE-FT-YPOD
45	100.0	0.0	2.02E-09	BPD-HOV-LF-UIK * EHY-SHV-LF-UOK-O * OPR-XHE-FT-YPOD
46	100.0	0.0	2.02E-09	BPD-HOV-LF-UOK * EHY-SHV-LF-UIK-O * OPR-XHE-FT-YPOD
47	100.0	0.0	2.02E-09	BPD-HOV-LF-LIK * EHY-SHV-LF-LOK-O * OPR-XHE-FT-YPOD
48	100.0	0.0	2.02E-09	BPD-HOV-LF-LOK * EHY-SHV-LF-LIK-O * OPR-XHE-FT-YPOD
49	100.0	0.0	5.82E-10	BPD-HOV-LF-UIK * EHY-SHV-LF-UOK-O * YPD-SOV-FC-UIK-O
50	100.0	0.0	5.82E-10	BPD-SOV-FC-UIK-O * EHY-SHV-LF-UOK-O * YPD-HOV-LF-UIK
51	100.0	0.0	5.82E-10	BPD-HOV-LF-UOK * EHY-SHV-LF-UIK-O * YPD-SOV-FC-UOK-O
52	100.0	0.0	5.82E-10	BPD-SOV-FC-UOK-O * EHY-SHV-LF-UIK-O * YPD-HOV-LF-UOK
53	100.0	0.0	5.82E-10	BPD-HOV-LF-LIK * EHY-SHV-LF-LOK-O * YPD-SOV-FC-LIK-O
54	100.0	0.0	5.82E-10	BPD-SOV-FC-LIK-O * EHY-SHV-LF-LOK-O * YPD-HOV-LF-LIK
55	100.0	0.0	5.82E-10	BPD-HOV-LF-LOK * EHY-SHV-LF-LIK-O * YPD-SOV-FC-LOK-O
56	100.0	0.0	5.82E-10	BPD-SOV-FC-LOK-O * EHY-SHV-LF-LIK-O * YPD-HOV-LF-LOK
57	100.0	0.0	4.53E-10	BPD-SOV-FC-UIK-O * EHY-SHV-LF-UOK-O * OPR-XHE-FT-YPOD

Confidential Treatment Requested by Transocean Holdings LLC TRN-HCEC-00056816

58	100.0	0.0	4.53E-10	BPD-SOV-FC-UOK-O * EHY-SHV-LF-UIK-O * OPR-XHE-FT-YPOD
59	100.0	0.0	4.53E-10	BPD-SOV-FC-LIK-O * EHY-SHV-LF-LOK-O * OPR-XHE-FT-YPOD
60	100.0	0.0	4.53E-10	BPD-SOV-FC-LOK-O * EHY-SHV-LF-LIK-O * OPR-XHE-FT-YPOD
61	100.0	0.0	2.21E-10	BPD-HOV-LF-UIK * BPD-HOV-LF-UOK * YPD-HOV-LF-UIK * YPD-HOV-LF-UOK
62	100.0	0.0	2.21E-10	BPD-HOV-LF-LIK * BPD-HOV-LF-LOK * YPD-HOV-LF-LIK * YPD-HOV-LF-LOK
63	100.0	0.0	1.31E-10	BPD-SOV-FC-UIK-O * EHY-SHV-LF-UOK-O * YPD-SOV-FC-UIK-O
64	100.0	0.0	1.31E-10	BPD-SOV-FC-UOK-O * EHY-SHV-LF-UIK-O * YPD-SOV-FC-UOK-O
65	100.0	0.0	1.31E-10	BPD-SOV-FC-LIK-O * EHY-SHV-LF-LOK-O * YPD-SOV-FC-LIK-O
66	100.0	0.0	1.31E-10	BPD-SOV-FC-LOK-O * EHY-SHV-LF-LIK-O * YPD-SOV-FC-LOK-O

Confidential Treatment Requested by Transocean Holdings LLC TRN-HCEC-00056817

LMRP-DSC - Failure to Disconnect LMRP from Stack for EDS

Cutset Total: 3.61E-05

Cutset No.	Cumulative % Total	Ind. Cutset %	Frequency	Cut Set Terms
1	13.6	13.6	4.90E-06	CDP-MOD-CC-MODM4
2	27.2	13.6	4.90E-06	POD-MOD-CC-MODM4
3	35.5	8.3	3.00E-06	BPD-ACC-UA-PSREG * OPR-XHE-FT-YPOD
4	40.9	5.5	1.97E-06	POD-SOF-LF-ERROR
5	46.4	5.5	1.97E-06	CDP-SOF-LF-ERROR
6	49.4	3.0	1.08E-06	EHY-SHV-LF-PDISR * EHY-SHV-LF-SDIS1
7	52.4	3.0	1.08E-06	EHY-SHV-LF-PDISR * EHY-SHV-LF-SDISR
8	55.4	3.0	1.08E-06	EHY-SHV-LF-PDISR * EHY-SHV-LF-SDIS2
9	58.4	3.0	1.08E-06	EHY-SHV-LF-PDIS1 * EHY-SHV-LF-SDIS1
10	61.4	3.0	1.08E-06	EHY-SHV-LF-PDIS2 * EHY-SHV-LF-SDIS1
11	64.4	3.0	1.08E-06	EHY-SHV-LF-PDIS1 * EHY-SHV-LF-SDISR
12	67.4	3.0	1.08E-06	EHY-SHV-LF-PDIS2 * EHY-SHV-LF-SDISR
13	70.4	3.0	1.08E-06	EHY-SHV-LF-PDIS1 * EHY-SHV-LF-SDIS2
14	73.4	3.0	1.08E-06	EHY-SHV-LF-PDIS2 * EHY-SHV-LF-SDIS2
15	76.1	2.8	1.00E-06	BPD-ACC-UA-PSREG * YPD-ACC-UA-PSREG
16	78.4	2.3	8.14E-07	BPD-HOV-FO-PDISC * BPD-HOV-FO-SDISC * OPR-XHE-FT-YPOD
17	79.4	1.0	3.71E-07	EHY-SOV-RO-BPSELB * OPR-XHE-FT-YPOD
18	80.2	0.8	2.82E-07	BPD-HOV-FO-PDISC * EHY-SHV-LF-SDIS1 * YPD-HOV-FO-PDISC
19	81.0	0.8	2.82E-07	BPD-HOV-FO-PDISC * EHY-SHV-LF-SDISR * YPD-HOV-FO-PDISC
20	81.8	0.8	2.82E-07	BPD-HOV-FO-SDISC * EHY-SHV-LF-PDISR * YPD-HOV-FO-SDISC
21	82.6	0.8	2.82E-07	BPD-HOV-FO-PDISC * EHY-SHV-LF-SDIS2 * YPD-HOV-FO-PDISC
22	83.3	0.8	2.82E-07	BPD-HOV-FO-SDISC * EHY-SHV-LF-PDIS2 * YPD-HOV-FO-SDISC
23	84.1	0.8	2.82E-07	BPD-HOV-FO-SDISC * EHY-SHV-LF-PDIS1 * YPD-HOV-FO-SDISC
24	84.9	0.8	2.71E-07	BPD-ACC-UA-PSREG * YPD-HOV-FO-PDISC * YPD-HOV-FO-SDISC
25	85.6	0.8	2.71E-07	BPD-HOV-FO-PDISC * BPD-HOV-FO-SDISC * YPD-ACC-UA-PSREG
26	86.4	0.8	2.70E-07	BPD-CON-LK-PIE * OPR-XHE-FT-YPOD
27	87.1	0.7	2.51E-07	BPD-CON-LK-PIE * EHY-HOV-FO-YPSUP
28	87.7	0.6	2.19E-07	BPD-PLC-SO-LPRVT * OPR-XHE-FT-YPOD
29	88.1	0.4	1.42E-07	CDP-PSP-CC-PSP4
30	88.5	0.4	1.42E-07	POD-PSP-CC-PSP4
31	88.9	0.4	1.34E-07	BPD-ACC-UA-PSREG * YPD-ACC-PB-PSREG
32	89.2	0.4	1.24E-07	EHY-SOV-RO-BPSELB * YPD-ACC-UA-PSREG
33	89.5	0.3	1.14E-07	OPR-PSP-CC-PSP6
34	89.8	0.3	1.05E-07	BPD-MOD-CC-MODM2 * OPR-XHE-FT-YPOD
35	90.1	0.3	9.77E-08	BPD-MOD-CC-MODM2 * EHY-HOV-FO-YPSUP
36	90.4	0.3	9.00E-08	BPD-CON-LK-PIE * YPD-ACC-UA-PSREG
37	90.6	0.3	9.00E-08	BPD-ACC-UA-PSREG * YPD-CON-LK-PIE

Confidential Treatment Requested by Transocean Holdings LLC TRN-HCEC-00056818

Cutset No.	Cumulative % Total	Ind. Cutset %	Frequency	Cut Set Terms
38	90.9	0.2	8.39E-08	BPD-SOV-SO-LPRVT * OPR-XHE-FT-YPOD
39	91.1	0.2	8.39E-08	EHY-PCV-SO-BPSEL * OPR-XHE-FT-YPOD
40	91.3	0.2	8.05E-08	BPD-CON-LF-OPNFC * BPD-CON-LF-UNPLG * OPR-XHE-FT-YPOD
41	91.5	0.2	7.78E-08	BPD-CON-LK-PIE * EHY-SOV-LF-YPSELY
42	91.8	0.2	7.78E-08	BPD-CON-LK-PIE * YPD-SOV-FO-YSSUP
43	92.0	0.2	7.50E-08	BPD-CON-LF-OPNFC * BPD-CON-LF-UNPLG * EHY-HOV-FO-YPSUP
44	92.2	0.2	7.35E-08	BPD-HOV-FO-PDISC * BPD-HOV-FO-SDISC * YPD-HOV-FO-PDISC * YPD-HOV-FO-SDISC
45	92.4	0.2	7.30E-08	BPD-PLC-SO-LPRVT * YPD-ACC-UA-PSREG
46	92.6	0.2	7.30E-08	BPD-ACC-UA-PSREG * YPD-PLC-SO-LPRVT
47	92.8	0.2	5.76E-08	BPD-ACC-PB-PSREG * OPR-XHE-FT-YPOD
48	92.9	0.2	5.13E-08	BPD-HOV-FO-PDISC * EHY-SHV-LF-SDIS1 * OPR-XHE-FT-YPOD
49	93.1	0.2	5.13E-08	BPD-HOV-FO-PDISC * EHY-SHV-LF-SDISR * OPR-XHE-FT-YPOD
50	93.2	0.2	5.13E-08	BPD-HOV-FO-SDISC * EHY-SHV-LF-PDISR * OPR-XHE-FT-YPOD
51	93.4	0.2	5.13E-08	BPD-HOV-FO-PDISC * EHY-SHV-LF-SDIS2 * OPR-XHE-FT-YPOD
52	93.5	0.2	5.13E-08	BPD-HOV-FO-SDISC * EHY-SHV-LF-PDIS2 * OPR-XHE-FT-YPOD
53	93.7	0.2	5.13E-08	BPD-HOV-FO-SDISC * EHY-SHV-LF-PDIS1 * OPR-XHE-FT-YPOD
54	93.8	0.1	4.27E-08	BPD-HOV-FO-PDISC * BPD-SOV-FO-SDISC * OPR-XHE-FT-YPOD
55	93.9	0.1	4.27E-08	BPD-HOV-FO-SDISC * BPD-SOV-FO-PDISC * OPR-XHE-FT-YPOD
56	94.0	0.1	4.27E-08	BPD-HOV-FO-SDISC * BPD-SOV-FC-PDS-L * OPR-XHE-FT-YPOD
57	94.1	0.1	3.64E-08	BPD-HOV-FO-PDISC * BPD-HOV-FO-SDISC * YPD-ACC-PB-PSREG
58	94.2	0.1	3.50E-08	BPD-MOD-CC-MODM2 * YPD-ACC-UA-PSREG
59	94.3	0.1	3.50E-08	BPD-ACC-UA-PSREG * YPD-MOD-CC-MODM2
60	94.4	0.1	3.35E-08	EHY-SOV-RO-BPSELB * YPD-HOV-FO-PDISC * YPD-HOV-FO-SDISC
61	94.5	0.1	3.07E-08	BPD-CON-LF-X10 * OPR-XHE-FT-YPOD
62	94.6	0.1	3.07E-08	BPD-CON-LF-X23 * OPR-XHE-FT-YPOD
63	94.7	0.1	3.07E-08	BPD-CON-LF-X23A * OPR-XHE-FT-YPOD
64	94.8	0.1	3.03E-08	BPD-MOD-CC-MODM2 * EHY-SOV-LF-YPSELY
65	94.9	0.1	3.03E-08	BPD-MOD-CC-MODM2 * YPD-SOV-FO-YSSUP
66	95.0	0.1	2.86E-08	BPD-CON-LF-X10 * EHY-HOV-FO-YPSUP
67	95.0	0.1	2.80E-08	BPD-ACC-UA-PSREG * EHY-PCV-LF-YPSEL
68	95.1	0.1	2.80E-08	BPD-ACC-UA-PSREG * YPD-SOV-SO-LPRVT
69	95.2	0.1	2.80E-08	BPD-SOV-SO-LPRVT * YPD-ACC-UA-PSREG
70	95.3	0.1	2.80E-08	EHY-PCV-SO-BPSEL * YPD-ACC-UA-PSREG
71	95.4	0.1	2.70E-08	CWS-XHE-FO-ENABL * DP-XHE-FO-ENABL * TPP-XHE-FO-ENABL
72	95.4	0.1	2.68E-08	BPD-CON-LF-OPNFC * BPD-CON-LF-UNPLG * YPD-ACC-UA-PSREG

Confidential Treatment Requested by Transocean Holdings LLC TRN-HCEC-00056819

Cutset No.	Cumulative % Total	Ind. Cutset %	Frequency	Cut Set Terms
73	95.5	0.1	2.68E-08	BPD-ACC-UA-PSREG * YPD-CON-LF-OPNFC * YPD-CON-LF-UNPLG
74	95.6	0.1	2.57E-08	CWS-XHE-FO-ENABL * DP-XHE-FO-ENABL * OPR-XHE-FR-TPP-M * TPP-XHE-FR-MANED
75	95.7	0.1	2.57E-08	CWS-XHE-FR-MANED * DP-XHE-FO-ENABL * OPR-XHE-FR-CWSM * TPP-XHE-FO-ENABL
76	95.8	0.1	2.57E-08	CWS-XHE-FO-ENABL * DP-XHE-FR-MANED * OPR-XHE-FR-DP-M * TPP-XHE-FO-ENABL
77	95.8	0.1	2.44E-08	BPD-CON-LK-PIE * YPD-HOV-FO-PDISC * YPD-HOV-FO-SDISC
78	95.9	0.1	2.44E-08	BPD-HOV-FO-PDISC * BPD-HOV-FO-SDISC * YPD-CON-LK-PIE
79	96.0	0.1	2.44E-08	CWS-XHE-FR-MANED * DP-XHE-FO-ENABL * OPR-XHE-FR-CWSM * OPR-XHE-FR-TPP-M * TPP-XHE-FR-MANED
80	96.0	0.1	2.44E-08	CWS-XHE-FO-ENABL * DP-XHE-FR-MANED * OPR-XHE-FR-DP-M * OPR-XHE-FR-TPP-M * TPP-XHE-FR-MANED
81	96.1	0.1	2.44E-08	CWS-XHE-FR-MANED * DP-XHE-FR-MANED * OPR-XHE-FR-CWSM * OPR-XHE-FR-DP-M * TPP-XHE-FO-ENABL
82	96.2	0.1	2.32E-08	BPD-CON-LF-OPNFC * BPD-CON-LF-UNPLG * YPD-SOV-FO-YSSUP
83	96.3	0.1	2.32E-08	BPD-CON-LF-OPNFC * BPD-CON-LF-UNPLG * EHY-SOV-LF-YPSELY
84	96.3	0.1	2.32E-08	CWS-XHE-FR-MANED * DP-XHE-FR-MANED * OPR-XHE-FR-CWSM * OPR-XHE-FR-DP-M * OPR-XHE-FR-TPP-M * TPP-XHE-FR-MANED
85	96.4	0.1	1.98E-08	BPD-PLC-SO-LPRVT * YPD-HOV-FO-PDISC * YPD-HOV-FO-SDISC
86	96.4	0.1	1.98E-08	BPD-HOV-FO-PDISC * BPD-HOV-FO-SDISC * YPD-PLC-SO-LPRVT
87	96.5	0.1	1.92E-08	BPD-ACC-PB-PSREG * YPD-ACC-UA-PSREG
88	96.6	0.1	1.71E-08	BPD-ACC-UA-PSREG * EHY-SHV-LF-SDIS2 * YPD-HOV-FO-PDISC
89	96.6	0.1	1.71E-08	BPD-ACC-UA-PSREG * EHY-SHV-LF-PDIS2 * YPD-HOV-FO-SDISC
90	96.7	0.1	1.71E-08	BPD-ACC-UA-PSREG * EHY-SHV-LF-PDIS1 * YPD-HOV-FO-SDISC
91	96.7	0.1	1.71E-08	BPD-ACC-UA-PSREG * EHY-SHV-LF-SDIS1 * YPD-HOV-FO-PDISC
92	96.8	0.1	1.71E-08	BPD-ACC-UA-PSREG * EHY-SHV-LF-SDISR * YPD-HOV-FO-PDISC
93	96.8	0.1	1.71E-08	BPD-ACC-UA-PSREG * EHY-SHV-LF-PDISR * YPD-HOV-FO-SDISC
94	96.9	0.1	1.71E-08	BPD-HOV-FO-PDISC * EHY-SHV-LF-SDIS1 * YPD-ACC-UA-PSREG
95	96.9	0.1	1.71E-08	BPD-HOV-FO-PDISC * EHY-SHV-LF-SDISR * YPD-ACC-UA-PSREG
96	97.0	0.1	1.71E-08	BPD-HOV-FO-SDISC * EHY-SHV-LF-PDISR * YPD-ACC-UA-PSREG
97	97.0	0.1	1.71E-08	BPD-HOV-FO-PDISC * EHY-SHV-LF-SDIS2 * YPD-ACC-UA-PSREG
98	97.1	0.1	1.71E-08	BPD-HOV-FO-SDISC * EHY-SHV-LF-PDIS2 * YPD-ACC-UA-PSREG

Confidential Treatment Requested by Transocean Holdings LLC TRN-HCEC-00056820

Cutset No.	Cumulative % Total	Ind. Cutset %	Frequency	Cut Set Terms
99	97.1	0.1	1.71E-08	BPD-HOV-FO-SDISC * EHY-SHV-LF-PDIS1 * YPD-ACC-UA-PSREG
100	97.2	0.1	1.66E-08	EHY-SOV-RO-BPSELB * YPD-ACC-PB-PSREG

Confidential Treatment Requested by Transocean Holdings LLC TRN-HCEC-00056821

SHEAR - Failure to Shear for EDS

Cutset Total: 2.06E-04

Cutset No.	Cumulative % Total	Ind. Cutset %	Frequency	Cut Set Terms
1	84.8	84.8	1.75E-04	EHY-SHV-LF-USR-F
2	89.0	4.2	8.74E-06	EHY-SHV-LF-CSR-F * POD-RAM-LF-CASNG
3	91.4	2.4	4.90E-06	CDP-MOD-CC-MODM4
4	93.8	2.4	4.90E-06	POD-MOD-CC-MODM4
5	95.2	1.5	3.00E-06	BPD-ACC-UA-MANPI * OPR-XHE-FT-YPOD
6	96.2	1.0	1.97E-06	POD-SOF-LF-ERROR
7	97.2	1.0	1.97E-06	CDP-SOF-LF-ERROR
8	97.7	0.5	1.00E-06	BPD-ACC-UA-MANPI * YPD-ACC-UA-MANPI
9	97.9	0.2	4.88E-07	EHY-HOV-FO-BSRHP * EHY-SHV-LF-USRNR
10	98.1	0.2	3.71E-07	EHY-SOV-RO-BPSELB * OPR-XHE-FT-YPOD
11	98.2	0.1	2.70E-07	BPD-CON-LK-PIE * OPR-XHE-FT-YPOD
12	98.3	0.1	2.51E-07	BPD-CON-LK-PIE * EHY-HOV-FO-YPSUP
13	98.5	0.1	2.19E-07	BPD-PLC-SO-MPRVT * OPR-XHE-FT-YPOD
14	98.5	0.1	1.42E-07	CDP-PSP-CC-PSP4
15	98.6	0.1	1.42E-07	POD-PSP-CC-PSP4
16	98.7	0.1	1.34E-07	BPD-ACC-UA-MANPI * YPD-ACC-PB-MANPI
17	98.7	0.1	1.24E-07	EHY-SOV-RO-BPSELB * YPD-ACC-UA-MANPI
18	98.8	0.1	1.14E-07	OPR-PSP-CC-PSP6
19	98.9	0.1	1.05E-07	BPD-MOD-CC-MODM2 * OPR-XHE-FT-YPOD
20	98.9	0.1	9.77E-08	BPD-MOD-CC-MODM2 * EHY-HOV-FO-YPSUP
21	99.0	0.1	9.00E-08	BPD-CON-LK-PIE * YPD-ACC-UA-MANPI
22	99.0	0.1	9.00E-08	BPD-ACC-UA-MANPI * YPD-CON-LK-PIE
23	99.0	0.1	8.39E-08	BPD-SOV-SO-MPRVT * OPR-XHE-FT-YPOD
24	99.1	0.1	8.39E-08	EHY-PCV-SO-BPSEL * OPR-XHE-FT-YPOD
25	99.1	0.0	8.05E-08	BPD-CON-LF-OPNFC * BPD-CON-LF-UNPLG * OPR-XHE-FT-YPOD
26	99.2	0.0	7.78E-08	BPD-CON-LK-PIE * YPD-SOV-FO-YSSUP
27	99.2	0.0	7.78E-08	BPD-CON-LK-PIE * EHY-SOV-LF-YPSELY
28	99.3	0.0	7.50E-08	BPD-CON-LF-OPNFC * BPD-CON-LF-UNPLG * EHY-HOV-FO-YPSUP
29	99.3	0.0	7.30E-08	BPD-PLC-SO-MPRVT * YPD-ACC-UA-MANPI
30	99.3	0.0	7.30E-08	BPD-ACC-UA-MANPI * YPD-PLC-SO-MPRVT
31	99.4	0.0	5.76E-08	BPD-ACC-PB-MANPI * OPR-XHE-FT-YPOD
32	99.4	0.0	3.50E-08	BPD-MOD-CC-MODM2 * YPD-ACC-UA-MANPI
33	99.4	0.0	3.50E-08	BPD-ACC-UA-MANPI * YPD-MOD-CC-MODM2
34	99.4	0.0	3.07E-08	BPD-CON-LF-X10 * OPR-XHE-FT-YPOD
35	99.5	0.0	3.07E-08	BPD-CON-LF-X23 * OPR-XHE-FT-YPOD
36	99.5	0.0	3.07E-08	BPD-CON-LF-X23A * OPR-XHE-FT-YPOD
37	99.5	0.0	3.05E-08	EHY-SHV-LF-UHPSR * EHY-SHV-LF-USRNR
38	99.5	0.0	3.03E-08	BPD-MOD-CC-MODM2 * YPD-SOV-FO-YSSUP
39	99.5	0.0	3.03E-08	BPD-MOD-CC-MODM2 * EHY-SOV-LF-YPSELY
40	99.6	0.0	2.86E-08	BPD-CON-LF-X10 * EHY-HOV-FO-YPSUP
41	99.6	0.0	2.80E-08	BPD-ACC-UA-MANPI * EHY-PCV-LF-YPSEL
42	99.6	0.0	2.80E-08	BPD-ACC-UA-MANPI * YPD-SOV-SO-MPRVT
43	99.6	0.0	2.80E-08	BPD-SOV-SO-MPRVT * YPD-ACC-UA-MANPI

Confidential Treatment Requested by Transocean Holdings LLC TRN-HCEC-00056822

Cutset No.	Cumulative % Total	Ind. Cutset %	Frequency	Cut Set Terms
44	99.6	0.0	2.80E-08	EHY-PCV-SO-BPSEL * YPD-ACC-UA-MANPI
45	99.7	0.0	2.70E-08	CWS-XHE-FO-ENABL * DP-XHE-FO-ENABL * TPP-XHE-FO-ENABL
46	99.7	0.0	2.68E-08	BPD-CON-LF-OPNFC * BPD-CON-LF-UNPLG * YPD-ACC-UA-MANPI
47	99.7	0.0	2.68E-08	BPD-ACC-UA-MANPI * YPD-CON-LF-OPNFC * YPD-CON-LF-UNPLG
48	99.7	0.0	2.57E-08	CWS-XHE-FO-ENABL * DP-XHE-FR-MANED * OPR-XHE-FR-DP-M * TPP-XHE-FO-ENABL
49	99.7	0.0	2.57E-08	CWS-XHE-FO-ENABL * DP-XHE-FO-ENABL * OPR-XHE-FR-TPP-M * TPP-XHE-FR-MANED
50	99.7	0.0	2.57E-08	CWS-XHE-FR-MANED * DP-XHE-FO-ENABL * OPR-XHE-FR-CWSM * TPP-XHE-FO-ENABL
51	99.8	0.0	2.44E-08	EHY-HOV-FO-CSRHP * EHY-SHV-LF-CSRNR * POD-RAM-LF-CASNG
52	99.8	0.0	2.44E-08	CWS-XHE-FR-MANED * DP-XHE-FO-ENABL * OPR-XHE-FR-CWSM * OPR-XHE-FR-TPP-M * TPP-XHE-FR-MANED
53	99.8	0.0	2.44E-08	CWS-XHE-FO-ENABL * DP-XHE-FR-MANED * OPR-XHE-FR-DP-M * OPR-XHE-FR-TPP-M * TPP-XHE-FR-MANED
54	99.8	0.0	2.44E-08	CWS-XHE-FR-MANED * DP-XHE-FR-MANED * OPR-XHE-FR-CWSM * OPR-XHE-FR-DP-M * TPP-XHE-FO-ENABL
55	99.8	0.0	2.34E-08	BPD-HOV-FO-USRHP * BPD-HOV-FO-USRNP * OPR-XHE-FT-YPOD
56	99.8	0.0	2.34E-08	BPD-HOV-FO-USRNP * EHY-HOV-FO-BSRHP * OPR-XHE-FT-YPOD
57	99.9	0.0	2.32E-08	BPD-CON-LF-OPNFC * BPD-CON-LF-UNPLG * YPD-SOV-FO-YSSUP
58	99.9	0.0	2.32E-08	BPD-CON-LF-OPNFC * BPD-CON-LF-UNPLG * EHY-SOV-LF-YPSELY
59	99.9	0.0	2.32E-08	CWS-XHE-FR-MANED * DP-XHE-FR-MANED * OPR-XHE-FR-CWSM * OPR-XHE-FR-DP-M * OPR-XHE-FR-TPP-M * TPP-XHE-FR-MANED
60	99.9	0.0	2.18E-08	BPD-HOV-FO-USRNP * EHY-HOV-FO-BSRHP * YPD-HOV-FO-USRNP
61	99.9	0.0	1.92E-08	BPD-ACC-PB-MANPI * YPD-ACC-UA-MANPI
62	99.9	0.0	1.66E-08	EHY-SOV-RO-BPSELB * YPD-ACC-PB-MANPI
63	99.9	0.0	1.57E-08	BPD-CON-LK-PIE * EHY-SHV-LF-YPSUP
64	100.0	0.0	1.57E-08	BPD-CON-LK-PIE * EHY-CHK-LF-RCSUP
65	100.0	0.0	1.57E-08	BPD-CON-LK-PIE * EHY-CHK-LF-YPSUP
66	100.0	0.0	1.28E-08	CDP-CPU-CC-CPU4
67	100.0	0.0	1.28E-08	POD-CPU-CC-CPU4
68	100.0	0.0	1.21E-08	BPD-CON-LK-PIE * YPD-ACC-PB-MANPI
69	100.0	0.0	1.14E-08	BPD-CBL-LF-CABLE * OPR-XHE-FT-YPOD
70	100.0	0.0	1.11E-08	EHY-SOV-RO-BPSELB * YPD-CON-LK-PIE
71	100.0	0.0	1.06E-08	BPD-CBL-LF-CABLE * EHY-HOV-FO-YPSUP
72	100.0	0.0	1.02E-08	BPD-ACC-UA-MANPI * YPD-CON-LF-X23
73	100.0	0.0	1.02E-08	BPD-ACC-UA-MANPI * YPD-CON-LF-X10
74	100.0	0.0	1.02E-08	BPD-ACC-UA-MANPI * YPD-CON-LF-X23A
75	100.0	0.0	1.02E-08	BPD-CON-LF-X10 * YPD-ACC-UA-MANPI
76	100.0	0.0	1.02E-08	BPD-CON-LF-X23 * YPD-ACC-UA-MANPI
77	100.0	0.0	1.02E-08	BPD-CON-LF-X23A * YPD-ACC-UA-MANPI

Confidential Treatment Requested by Transocean Holdings LLC TRN-HCEC-00056823

Cutset No.	Cumulative % Total	Ind. Cutset %	Frequency	Cut Set Terms
78	100.0	0.0	9.80E-09	BPD-PLC-SO-MPRVT * YPD-ACC-PB-MANPI
79	100.0	0.0	9.24E-09	BPD-ACC-UA-MANPI * YPD-REG-LO-MNREG
80	100.0	0.0	9.24E-09	BPD-ACC-UA-MANPI * YPD-REG-LF-M3KSI
81	100.0	0.0	9.02E-09	EHY-SOV-RO-BPSELB * YPD-PLC-SO-MPRVT
82	100.0	0.0	8.84E-09	BPD-CON-LF-X10 * YPD-SOV-FO-YSSUP
83	100.0	0.0	8.84E-09	BPD-CON-LF-X10 * EHY-SOV-LF-YPSELY
84	100.0	0.0	8.10E-09	BPD-CON-LK-PIE * YPD-CON-LK-PIE
85	100.0	0.0	7.80E-09	BPD-ACC-UA-MANPI * EHY-HOV-FO-BSRHP * YPD-HOV-FO-USRNP
86	100.0	0.0	7.80E-09	BPD-ACC-UA-MANPI * YPD-HOV-FO-USRHP * YPD-HOV-FO-USRNP
87	100.0	0.0	7.80E-09	BPD-HOV-FO-USRHP * BPD-HOV-FO-USRNP * YPD-ACC-UA-MANPI
88	100.0	0.0	7.80E-09	BPD-HOV-FO-USRNP * EHY-HOV-FO-BSRHP * YPD-ACC-UA-MANPI
89	100.0	0.0	7.24E-09	BPD-HOV-FO-USRHP * BPD-SOV-FC-BSR-O * OPR-XHE-FT-YPOD
90	100.0	0.0	7.24E-09	BPD-SOV-FC-BSR-O * EHY-HOV-FO-BSRHP * OPR-XHE-FT-YPOD
91	100.0	0.0	7.24E-09	BPD-HOV-FO-USRNP * BPD-SOV-FO-USRHP * OPR-XHE-FT-YPOD
92	100.0	0.0	7.24E-09	BPD-HOV-FO-USRHP * BPD-SOV-FO-USRNP * OPR-XHE-FT-YPOD
93	100.0	0.0	7.24E-09	BPD-SOV-FO-USRNP * EHY-HOV-FO-BSRHP * OPR-XHE-FT-YPOD
94	100.0	0.0	6.74E-09	BPD-SOV-FC-BSR-O * EHY-HOV-FO-BSRHP * YPD-HOV-FO-USRNP
95	100.0	0.0	6.74E-09	BPD-SOV-FO-USRNP * EHY-HOV-FO-BSRHP * YPD-HOV-FO-USRNP
96	100.0	0.0	6.74E-09	BPD-HOV-FO-USRNP * EHY-HOV-FO-BSRHP * YPD-SOV-FC-BSR-O
97	100.0	0.0	6.74E-09	BPD-HOV-FO-USRNP * EHY-HOV-FO-BSRHP * YPD-SOV-FO-USRNP
98	100.0	0.0	6.57E-09	BPD-PLC-SO-MPRVT * YPD-CON-LK-PIE
99	100.0	0.0	6.57E-09	BPD-CON-LK-PIE * YPD-PLC-SO-MPRVT
100	100.0	0.0	6.57E-09	BPD-CON-LK-PIE * BPD-PLC-SO-CF-OP

Confidential Treatment Requested by Transocean Holdings LLC TRN-HCEC-00056824

1-Well Cutsets - Failure to Perform Well Control Operations

Cutset Total: 3.70E-05

Cutset No.	Cumulative % Total	Ind. Cutset %	Frequency	Cut Set Terms
1	27.0	27.0	1.00E-05	INDICATE-WC
2	40.5	13.5	5.00E-06	OPR-XHE-FO-WELLC
3	53.7	13.2	4.90E-06	CDP-MOD-CC-MODM4
4	67.0	13.2	4.90E-06	POD-MOD-CC-MODM4
5	75.1	8.1	3.00E-06	BPD-ACC-UA-MANPI * OPR-XHE-FT-YPOD
6	80.4	5.3	1.97E-06	POD-SOF-LF-ERROR
7	85.7	5.3	1.97E-06	CDP-SOF-LF-ERROR
8	88.4	2.7	1.00E-06	BPD-ACC-UA-MANPI * YPD-ACC-UA-MANPI
9	89.4	1.0	3.71E-07	EHY-SOV-RO-BPSELB * OPR-XHE-FT-YPOD
10	90.2	0.7	2.70E-07	BPD-CON-LK-PIE * OPR-XHE-FT-YPOD
11	90.9	0.7	2.51E-07	BPD-CON-LK-PIE * EHY-HOV-FO-YPSUP
12	91.4	0.6	2.19E-07	BPD-PLC-SO-MPRVT * OPR-XHE-FT-YPOD
13	91.8	0.4	1.42E-07	CDP-PSP-CC-PSP4
14	92.2	0.4	1.42E-07	POD-PSP-CC-PSP4
15	92.6	0.4	1.34E-07	BPD-ACC-UA-MANPI * YPD-ACC-PB-MANPI
16	92.9	0.3	1.24E-07	EHY-SOV-RO-BPSELB * YPD-ACC-UA-MANPI
17	93.2	0.3	1.14E-07	OPR-PSP-CC-PSP6
18	93.5	0.3	1.05E-07	BPD-MOD-CC-MODM2 * OPR-XHE-FT-YPOD
19	93.8	0.3	9.77E-08	BPD-MOD-CC-MODM2 * EHY-HOV-FO-YPSUP
20	94.0	0.3	9.00E-08	BPD-CON-LK-PIE * YPD-ACC-UA-MANPI
21	94.3	0.3	9.00E-08	BPD-ACC-UA-MANPI * YPD-CON-LK-PIE
22	94.5	0.2	8.39E-08	BPD-SOV-SO-MPRVT * OPR-XHE-FT-YPOD
23	94.8	0.2	8.39E-08	EHY-PCV-SO-BPSEL * OPR-XHE-FT-YPOD
24	95.0	0.2	8.05E-08	BPD-CON-LF-OPNFC * BPD-CON-LF-UNPLG, OPR-XHE-FT-YPOD
25	95.2	0.2	7.78E-08	BPD-CON-LK-PIE * EHY-SOV-LF-YPSELY
26	95.4	0.2	7.78E-08	BPD-CON-LK-PIE * YPD-SOV-FO-YSSUP
27	95.6	0.2	7.50E-08	BPD-CON-LF-OPNFC * BPD-CON-LF-UNPLG, EHY-HOV-FO-YPSUP
28	95.8	0.2	7.30E-08	BPD-PLC-SO-MPRVT * YPD-ACC-UA-MANPI
29	96.0	0.2	7.30E-08	BPD-ACC-UA-MANPI * YPD-PLC-SO-MPRVT
30	96.2	0.2	5.76E-08	BPD-ACC-PB-MANPI * OPR-XHE-FT-YPOD
31	96.3	0.1	3.50E-08	BPD-MOD-CC-MODM2 * YPD-ACC-UA-MANPI
32	96.4	0.1	3.50E-08	BPD-ACC-UA-MANPI * YPD-MOD-CC-MODM2
33	96.5	0.1	3.07E-08	BPD-CON-LF-X10 * OPR-XHE-FT-YPOD
34	96.6	0.1	3.07E-08	BPD-CON-LF-X23 * OPR-XHE-FT-YPOD
35	96.6	0.1	3.07E-08	BPD-CON-LF-X21 * OPR-XHE-FT-YPOD
36	96.7	0.1	3.07E-08	BPD-CON-LF-X23A * OPR-XHE-FT-YPOD
37	96.8	0.1	3.05E-08	EHY-SHV-LF-LAC * EHY-SHV-LF-UAC
38	96.9	0.1	3.03E-08	BPD-MOD-CC-MODM2 * EHY-SOV-LF-YPSELY
39	97.0	0.1	3.03E-08	BPD-MOD-CC-MODM2 * YPD-SOV-FO-YSSUP
40	97.1	0.1	2.86E-08	BPD-CON-LF-X10 * EHY-HOV-FO-YPSUP

Confidential Treatment Requested by Transocean Holdings LLC TRN-HCEC-00056825

Cutset No.	Cumulative % Total	Ind Cutset %	Frequency	Cut Set Terms
41	97.2	0.1	2.80E-08	BPD-ACC-UA-MANPI * EHY-PCV-LF-YPSEL
42	97.2	0.1	2.80E-08	BPD-ACC-UA-MANPI * YPD-SOV-SO-MPRVT
43	97.3	0.1	2.80E-08	BPD-SOV-SO-MPRVT * YPD-ACC-UA-MANPI
44	97.4	0.1	2.80E-08	EHY-PCV-SO-BPSEL * YPD-ACC-UA-MANPI
45	97.5	0.1	2.70E-08	CWS-XHE-FO-ENABL * DP-XHE-FO-ENABL, TPP-XHE-FO-ENABL
46	97.6	0.1	2.68E-08	BPD-CON-LF-OPNFC * BPD-CON-LF-UNPLG, YPD-ACC-UA-MANPI
47	97.6	0.1	2.68E-08	BPD-ACC-UA-MANPI * YPD-CON-LF-OPNFC, YPD-CON-LF-UNPLG
48	97.7	0.1	2.57E-08	CWS-XHE-FO-ENABL * DP-XHE-FR-MANED, OPR-XHE-FR-DP-M * TPP-XHE-FO-ENABL
49	97.8	0.1	2.57E-08	CWS-XHE-FO-ENABL * DP-XHE-FO-ENABL, OPR-XHE-FR-TPP-M * TPP-XHE-FR-MANED
50	97.9	0.1	2.57E-08	CWS-XHE-FR-MANED * DP-XHE-FO-ENABL, OPR-XHE-FR-CWSM * TPP-XHE-FO-ENABL
51	97.9	0.1	2.44E-08	CWS-XHE-FR-MANED * DP-XHE-FO-ENABL, OPR-XHE-FR-CWSM * OPR-XHE-FR-TPP-M, TPP-XHE-FR-MANED
52	98.0	0.1	2.44E-08	CWS-XHE-FO-ENABL * DP-XHE-FR-MANED, OPR-XHE-FR-DP-M * OPR-XHE-FR-TPP-M, TPP-XHE-FR-MANED
53	98.1	0.1	2.44E-08	CWS-XHE-FR-MANED * DP-XHE-FR-MANED, OPR-XHE-FR-CWSM * OPR-XHE-FR-DP-M, TPP-XHE-FO-ENABL
54	98.1	0.1	2.34E-08	BPD-HOV-FO-LACLS * BPD-HOV-FO-UACLS, OPR-XHE-FT-YPOD
55	98.2	0.1	2.32E-08	BPD-CON-LF-OPNFC * BPD-CON-LF-UNPLG, YPD-SOV-FO-YSSUP
56	98.3	0.1	2.32E-08	BPD-CON-LF-OPNFC * BPD-CON-LF-UNPLG, EHY-SOV-LF-YPSELY
57	98.3	0.1	2.32E-08	CWS-XHE-FR-MANED * DP-XHE-FR-MANED, OPR-XHE-FR-CWSM * OPR-XHE-FR-DP-M, OPR-XHE-FR-TPP-M * TPP-XHE-FR-MANED
58	98.4	0.1	1.92E-08	BPD-ACC-PB-MANPI * YPD-ACC-UA-MANPI
59	98.4	0.1	1.66E-08	EHY-SOV-RO-BPSELB * YPD-ACC-PB-MANPI
60	98.5	0.1	1.57E-08	BPD-CON-LK-PIE * EHY-SHV-LF-YPSUP
61	98.5	0.1	1.57E-08	BPD-CON-LK-PIE * EHY-CHK-LF-RCSUP
62	98.6	0.1	1.57E-08	BPD-CON-LK-PIE * EHY-CHK-LF-YPSUP
63	98.6	0.0	1.28E-08	CDP-CPU-CC-CPU4
64	98.7	0.0	1.28E-08	POD-CPU-CC-CPU4
65	98.7	0.0	1.21E-08	BPD-CON-LK-PIE * YPD-ACC-PB-MANPI
66	98.7	0.0	1.14E-08	BPD-CBL-LF-CABLE * OPR-XHE-FT-YPOD
67	98.8	0.0	1.11E-08	EHY-SOV-RO-BPSELB * YPD-CON-LK-PIE
68	98.8	0.0	1.06E-08	BPD-CBL-LF-CABLE * EHY-HOV-FO-YPSUP
69	98.8	0.0	1.02E-08	BPD-ACC-UA-MANPI * YPD-CON-LF-X23
70	98.9	0.0	1.02E-08	BPD-ACC-UA-MANPI * YPD-CON-LF-X10
71	98.9	0.0	1.02E-08	BPD-ACC-UA-MANPI * YPD-CON-LF-X23A
72	98.9	0.0	1.02E-08	BPD-CON-LF-X10 * YPD-ACC-UA-MANPI
73	99.0	0.0	1.02E-08	BPD-CON-LF-X23 * YPD-ACC-UA-MANPI
74	99.0	0.0	1.02E-08	BPD-CON-LF-X23A * YPD-ACC-UA-MANPI
75	99.0	0.0	9.80E-09	BPD-PLC-SO-MPRVT * YPD-ACC-PB-MANPI

Confidential Treatment Requested by Transocean Holdings LLC TRN-HCEC-00056826

Cutset No.	Cumulative % Total	Ind. Cutset %	Frequency	Cut Set Terms
76	99.1	0.0	9.24E-09	BPD-ACC-UA-MANPI * YPD-REG-LO-MNREG
77	99.1	0.0	9.24E-09	BPD-ACC-UA-MANPI * YPD-REG-LF-M3KSI
78	99.1	0.0	9.02E-09	EHY-SOV-RO-BPSELB * YPD-PLC-SO-MPRVT
79	99.2	0.0	8.84E-09	BPD-CON-LF-X10 * EHY-SOV-LF-YPSELY
80	99.2	0.0	8.84E-09	BPD-CON-LF-X10 * YPD-SOV-FO-YSSUP
81	99.2	0.0	8.38E-09	BPD-ACC-UA-UAREG * BPD-HOV-FO-LACLS, OPR-XHE-FT-YPOD
82	99.2	0.0	8.38E-09	BPD-ACC-UA-LAREG * BPD-HOV-FO-UACLS, OPR-XHE-FT-YPOD
83	99.3	0.0	8.10E-09	BPD-CON-LK-PIE * YPD-CON-LK-PIE
84	99.3	0.0	7.24E-09	BPD-HOV-FO-LACLS * BPD-SOV-FO-UACLS, OPR-XHE-FT-YPOD
85	99.3	0.0	7.24E-09	BPD-HOV-FO-UACLS * BPD-SOV-FO-LACLS, OPR-XHE-FT-YPOD
86	99.3	0.0	6.57E-09	BPD-PLC-SO-MPRVT * YPD-CON-LK-PIE
87	99.4	0.0	6.57E-09	BPD-CON-LK-PIE * BPD-PLC-SO-CF-OP
88	99.4	0.0	6.57E-09	BPD-CON-LK-PIE * YPD-PLC-SO-MPRVT
89	99.4	0.0	6.11E-09	BPD-MOD-CC-MODM2 * EHY-SHV-LF-YPSUP
90	99.4	0.0	6.11E-09	BPD-MOD-CC-MODM2 * EHY-CHK-LF-RCSUP
91	99.4	0.0	6.11E-09	BPD-MOD-CC-MODM2 * EHY-CHK-LF-YPSUP
92	99.5	0.0	5.91E-09	CWS-XHE-FO-ENABL * OPR-SOF-LF-ERROR
93	99.5	0.0	5.61E-09	CWS-XHE-FR-MANED * OPR-SOF-LF-ERROR, OPR-XHE-FR-CWSM
94	99.5	0.0	5.32E-09	BPD-PLC-SO-MPRVT * YPD-PLC-SO-MPRVT
95	99.5	0.0	4.70E-09	BPD-MOD-CC-MODM2 * YPD-ACC-PB-MANPI
96	99.5	0.0	4.69E-09	BPD-CON-LF-OPNFC * BPD-CON-LF-UNPLG, EHY-SHV-LF-YPSUP
97	99.6	0.0	4.69E-09	BPD-CON-LF-OPNFC * BPD-CON-LF-UNPLG, EHY-CHK-LF-RCSUP
98	99.6	0.0	4.69E-09	BPD-CON-LF-OPNFC * BPD-CON-LF-UNPLG, EHY-CHK-LF-YPSUP
99	99.6	0.0	4.50E-09	CWS-XHE-FO-ENABL * DP-XHE-FR-UNMAN, OPR-XHE-FR-DP-A * TPP-XHE-FO-ENABL
100	99.6	0.0	4.50E-09	CWS-XHE-FO-ENABL * DP-XHE-FO-ENABL, OPR-XHE-FR-TPP-A * TPP-XHE-FR-UNMAN

Confidential Treatment Requested by Transocean Holdings LLC TRN-HCEC-00056827

ANNLR - Failure to Close Upper and Lower Annular for Well Control

Cutset Total: 1.66E-05

Cutset No:	Cumulative % Total	Ind. Cutset %	Frequency	Cut Set Terms
1	29.6	29.6	4.90E-06	CDP-MOD-CC-MODM4
2	59.1	29.6	4.90E-06	POD-MOD-CC-MODM4
3	71.0	11.9	1.97E-06	POD-SOF-LF-ERROR
4	82.9	11.9	1.97E-06	CDP-SOF-LF-ERROR
5	85.1	2.2	3.71E-07	EHY-SOV-RO-BPSELB * OPR-XHE-FT-YPOD
6	86.8	1.6	2.70E-07	BPD-CON-LK-PIE * OPR-XHE-FT-YPOD
7	88.3	1.5	2.51E-07	BPD-CON-LK-PIE * EHY-HOV-FO-YPSUP
8	89.2	0.9	1.42E-07	CDP-PSP-CC-PSP4
9	90.0	0.9	1.42E-07	POD-PSP-CC-PSP4
10	90.7	0.7	1.14E-07	OPR-PSP-CC-PSP6
11	91.4	0.6	1.05E-07	BPD-MOD-CC-MODM2 * OPR-XHE-FT-YPOD
12	91.9	0.6	9.77E-08	BPD-MOD-CC-MODM2 * EHY-HOV-FO-YPSUP
13	92.5	0.5	8.39E-08	EHY-PCV-SO-BPSEL * OPR-XHE-FT-YPOD
14	93.0	0.5	8.05E-08	BPD-CON-LF-OPNFC * BPD-CON-LF-UNPLG * OPR-XHE-FT-YPOD
15	93.4	0.5	7.78E-08	BPD-CON-LK-PIE * EHY-SOV-LF-YPSELY
16	93.9	0.5	7.78E-08	BPD-CON-LK-PIE * YPD-SOV-FO-YSSUP
17	94.4	0.5	7.50E-08	BPD-CON-LF-OPNFC * BPD-CON-LF-UNPLG * EHY-HOV-FO-YPSUP
18	94.5	0.2	3.07E-08	BPD-CON-LF-X10 * OPR-XHE-FT-YPOD
19	94.7	0.2	3.07E-08	BPD-CON-LF-X23 * OPR-XHE-FT-YPOD
20	94.9	0.2	3.07E-08	BPD-CON-LF-X21 * OPR-XHE-FT-YPOD
21	95.1	0.2	3.07E-08	BPD-CON-LF-X23A * OPR-XHE-FT-YPOD
22	95.3	0.2	3.05E-08	EHY-SHV-LF-LAC * EHY-SHV-LF-UAC
23	95.5	0.2	3.03E-08	BPD-MOD-CC-MODM2 * EHY-SOV-LF-YPSELY
24	95.7	0.2	3.03E-08	BPD-MOD-CC-MODM2 * YPD-SOV-FO-YSSUP
25	95.9	0.2	2.86E-08	BPD-CON-LF-X10 * EHY-HOV-FO-YPSUP
26	96.0	0.2	2.70E-08	CWS-XHE-FO-ENABL * DP-XHE-FO-ENABL * TPP-XHE-FO-ENABL
27	96.2	0.2	2.57E-08	CWS-XHE-FO-ENABL * DP-XHE-FR-MANED * OPR-XHE-FR-DP-M * TPP-XHE-FO-ENABL
28	96.3	0.2	2.57E-08	CWS-XHE-FO-ENABL * DP-XHE-FO-ENABL * OPR-XHE-FR-TPP-M * TPP-XHE-FR-MANED
29	96.5	0.2	2.57E-08	CWS-XHE-FR-MANED * DP-XHE-FO-ENABL * OPR-XHE-FR-CWSM * TPP-XHE-FO-ENABL
30	96.7	0.2	2.44E-08	CWS-XHE-FR-MANED * DP-XHE-FO-ENABL * OPR-XHE-FR-CWSM * OPR-XHE-FR-TPP-M * TPP-XHE-FR-MANED
31	96.8	0.2	2.44E-08	CWS-XHE-FO-ENABL * DP-XHE-FR-MANED * OPR-XHE-FR-DP-M * OPR-XHE-FR-TPP-M * TPP-XHE-FR-MANED
32	97.0	0.2	2.44E-08	CWS-XHE-FR-MANED * DP-XHE-FR-MANED * OPR-XHE-FR-CWSM * OPR-XHE-FR-DP-M * TPP-XHE-FO-ENABL
33	97.1	0.2	2.34E-08	BPD-HOV-FO-LACLS * BPD-HOV-FO-UACLS * OPR-XHE-FT-YPOD
34	97.3	0.2	2.32E-08	BPD-CON-LF-OPNFC * BPD-CON-LF-UNPLG * YPD-SOV-

Confidential Treatment Requested by Transocean Holdings LLC TRN-HCEC-00056828

Cutset No.	Cumulative % Total	Ind. Cutset %	Frequency	Cut Set Terms
				FO-YSSUP
35	97.4	0.2	2.32E-08	BPD-CON-LF-OPNFC * BPD-CON-LF-UNPLG * EHY-SOV-LF-YPSELY
36	97.5	0.1	2.32E-08	CWS-XHE-FR-MANED * DP-XHE-FR-MANED * OPR-XHE-FR-CWSM * OPR-XHE-FR-DP-M * OPR-XHE-FR-TPP-M * TPP-XHE-FR-MANED
37	97.6	0.1	1.57E-08	BPD-CON-LK-PIE * EHY-SHV-LF-YPSUP
38	97.7	0.1	1.57E-08	BPD-CON-LK-PIE * EHY-CHK-LF-RCSUP
39	97.8	0.1	1.57E-08	BPD-CON-LK-PIE * EHY-CHK-LF-YPSUP
40	97.9	0.1	1.28E-08	CDP-CPU-CC-CPU4
41	98.0	0.1	1.28E-08	POD-CPU-CC-CPU4
42	98.1	0.1	1.14E-08	BPD-CBL-LF-CABLE * OPR-XHE-FT-YPOD
43	98.2	0.1	1.11E-08	EHY-SOV-RO-BPSELB * YPD-CON-LK-PIE
44	98.2	0.1	1.06E-08	BPD-CBL-LF-CABLE * EHY-HOV-FO-YPSUP
45	98.3	0.1	8.84E-09	BPD-CON-LF-X10 * EHY-SOV-LF-YPSELY
46	98.3	0.1	8.84E-09	BPD-CON-LF-X10 * YPD-SOV-FO-YSSUP
47	98.4	0.1	8.38E-09	BPD-ACC-UA-UAREG * BPD-HOV-FO-LACLS * OPR-XHE-FT-YPOD
48	98.4	0.1	8.38E-09	BPD-ACC-UA-LAREG * BPD-HOV-FO-UACLS * OPR-XHE-FT-YPOD
49	98.5	0.1	8.10E-09	BPD-CON-LK-PIE * YPD-CON-LK-PIE
50	98.6	0.1	7.24E-09	BPD-HOV-FO-LACLS * BPD-SOV-FO-UACLS * OPR-XHE-FT-YPOD
51	98.6	0.1	7.24E-09	BPD-HOV-FO-UACLS * BPD-SOV-FO-LACLS * OPR-XHE-FT-YPOD
52	98.6	0.0	6.57E-09	BPD-CON-LK-PIE * BPD-PLC-SO-CF-OP
53	98.7	0.0	6.11E-09	BPD-MOD-CC-MODM2 * EHY-SHV-LF-YPSUP
54	98.7	0.0	6.11E-09	BPD-MOD-CC-MODM2 * EHY-CHK-LF-RCSUP
55	98.8	0.0	6.11E-09	BPD-MOD-CC-MODM2 * EHY-CHK-LF-YPSUP
56	98.8	0.0	5.91E-09	CWS-XHE-FO-ENABL * OPR-SOF-LF-ERROR
57	98.9	0.0	5.61E-09	CWS-XHE-FR-MANED * OPR-SOF-LF-ERROR * OPR-XHE-FR-CWSM
58	98.9	0.0	4.69E-09	BPD-CON-LF-OPNFC * BPD-CON-LF-UNPLG * EHY-SHV-LF-YPSUP
59	98.9	0.0	4.69E-09	BPD-CON-LF-OPNFC * BPD-CON-LF-UNPLG * EHY-CHK-LF-RCSUP
60	98.9	0.0	4.69E-09	BPD-CON-LF-OPNFC * BPD-CON-LF-UNPLG * EHY-CHK-LF-YPSUP
61	99.0	0.0	4.50E-09	CWS-XHE-FO-ENABL * DP-XHE-FR-UNMAN * OPR-XHE-FR-DP-A * TPP-XHE-FO-ENABL
62	99.0	0.0	4.50E-09	CWS-XHE-FO-ENABL * DP-XHE-FO-ENABL * OPR-XHE-FR-TPP-A * TPP-XHE-FR-UNMAN
63	99.0	0.0	4.50E-09	CWS-XHE-FR-UNMAN * DP-XHE-FO-ENABL * OPR-XHE-FR-CWSA * TPP-XHE-FO-ENABL
64	99.1	0.0	4.36E-09	EHY-CHK-LF-HLSUP * EHY-CHK-LF-RCSUP
65	99.1	0.0	4.33E-09	EHY-SOV-RO-BPSELB * YPD-MOD-CC-MODM2
66	99.1	0.0	4.28E-09	CWS-XHE-FR-MANED * DP-XHE-FO-ENABL * OPR-XHE-FR-CWSM * OPR-XHE-FR-TPP-A * TPP-XHE-FR-UNMAN
67	99.2	0.0	4.28E-09	CWS-XHE-FO-ENABL * DP-XHE-FR-UNMAN * OPR-XHE-FR-DP-A * OPR-XHE-FR-TPP-M * TPP-XHE-FR-MANED

Confidential Treatment Requested by Transocean Holdings LLC TRN-HCEC-00056829

Cutset No.	Cumulative % Total	Ind. Cutset %	Frequency	Cut Set Terms
68	99.2	0.0	4.28E-09	CWS-XHE-FR-UNMAN * DP-XHE-FO-ENABL * OPR-XHE-FR-CWSA * OPR-XHE-FR-TPP-M * TPP-XHE-FR-MANED
69	99.2	0.0	4.28E-09	CWS-XHE-FO-ENABL * DP-XHE-FR-MANED * OPR-XHE-FR-DP-M * OPR-XHE-FR-TPP-A * TPP-XHE-FR-UNMAN
70	99.3	0.0	4.28E-09	CWS-XHE-FR-MANED * DP-XHE-FR-UNMAN * OPR-XHE-FR-CWSM * OPR-XHE-FR-DP-A * TPP-XHE-FO-ENABL
71	99.3	0.0	4.28E-09	CWS-XHE-FR-UNMAN * DP-XHE-FR-MANED * OPR-XHE-FR-CWSA * OPR-XHE-FR-DP-M * TPP-XHE-FO-ENABL
72	99.3	0.0	4.06E-09	CWS-XHE-FR-MANED * DP-XHE-FR-MANED * OPR-XHE-FR-CWSM * OPR-XHE-FR-DP-M * OPR-XHE-FR-TPP-A * TPP-XHE-FR-UNMAN
73	99.4	0.0	4.06E-09	CWS-XHE-FR-UNMAN * DP-XHE-FR-MANED * OPR-XHE-FR-CWSA * OPR-XHE-FR-DP-M * OPR-XHE-FR-TPP-M * TPP-XHE-FR-MANED
74	99.4	0.0	4.06E-09	CWS-XHE-FR-MANED * DP-XHE-FR-UNMAN * OPR-XHE-FR-CWSM * OPR-XHE-FR-DP-A * OPR-XHE-FR-TPP-M * TPP-XHE-FR-MANED
75	99.4	0.0	3.96E-09	BPD-REG-LF-M3KSI * OPR-XHE-FT-YPOD
76	99.4	0.0	3.46E-09	EHY-PCV-LF-YPSEL * EHY-SOV-RO-BPSELB
77	99.5	0.0	3.32E-09	EHY-SOV-RO-BPSELB * YPD-CON-LF-OPNFC * YPD-CON-LF-UNPLG
78	99.5	0.0	3.30E-09	BPD-CBL-LF-CABLE * EHY-SOV-LF-YPSELY
79	99.5	0.0	3.30E-09	BPD-CBL-LF-CABLE * YPD-SOV-FO-YSSUP
80	99.5	0.0	3.15E-09	BPD-MOD-CC-MODM2 * YPD-CON-LK-PIE
81	99.6	0.0	3.15E-09	BPD-CON-LK-PIE * YPD-MOD-CC-MODM2
82	99.6	0.0	3.06E-09	BPD-PSP-CC-PSP2 * OPR-XHE-FT-YPOD
83	99.6	0.0	3.00E-09	BPD-ACC-UA-LAREG * BPD-ACC-UA-UAREG * OPR-XHE-FT-YPOD
84	99.6	0.0	2.85E-09	BPD-PSP-CC-PSP2 * EHY-HOV-FO-YPSUP
85	99.6	0.0	2.59E-09	BPD-ACC-UA-UAREG * BPD-SOV-FO-LACLS * OPR-XHE-FT-YPOD
86	99.7	0.0	2.59E-09	BPD-ACC-UA-LAREG * BPD-SOV-FO-UACLS * OPR-XHE-FT-YPOD
87	99.7	0.0	2.55E-09	BPD-MOD-CC-MODM2 * BPD-PLC-SO-CF-OP
88	99.7	0.0	2.52E-09	BPD-CON-LK-PIE * EHY-PCV-LF-YPSEL
89	99.7	0.0	2.52E-09	BPD-CON-LK-PIE * EHY-PCV-LF-YPSUP
90	99.8	0.0	2.52E-09	BPD-CON-LK-PIE * EHY-HOV-SO-FLUSH
91	99.8	0.0	2.52E-09	BPD-CON-LK-PIE * BPD-SOV-SO-CF-OP
92	99.8	0.0	2.52E-09	EHY-PCV-SO-BPSEL * YPD-CON-LK-PIE
93	99.8	0.0	2.42E-09	BPD-CON-LK-PIE * YPD-CON-LF-OPNFC * YPD-CON-LF-UNPLG
94	99.8	0.0	2.42E-09	BPD-CON-LF-OPNFC * BPD-CON-LF-UNPLG * YPD-CON-LK-PIE
95	99.8	0.0	2.24E-09	BPD-SOV-FO-LACLS * BPD-SOV-FO-UACLS * OPR-XHE-FT-YPOD
96	99.9	0.0	1.96E-09	BPD-CON-LF-OPNFC * BPD-CON-LF-UNPLG * BPD-PLC-SO-CF-OP
97	99.9	0.0	1.82E-09	BPD-PLC-SO-CF-OP * EHY-CHK-LF-HLSUP
98	99.9	0.0	1.79E-09	BPD-CON-LF-X10 * EHY-SHV-LF-YPSUP
99	99.9	0.0	1.79E-09	BPD-CON-LF-X10 * EHY-CHK-LF-RCSUP

Confidential Treatment Requested by Transocean Holdings LLC TRN-HCEC-00056830

Cutset No.	Cumulative % Total	Ind. Cutset %	Frequency	Cut Set Terms
100	99.9	0.0	1.79E-09	BPD-CON-LF-X10 * EHY-CHK-LF-YPSUP

Confidential Treatment Requested by Transocean Holdings LLC TRN-HCEC-00056831

Cutsets - Failure to Operate Appropriate Combinations of Choke & Kill Valves & Rams for Well Control

Cutset Total: 2.19E-05

Cutset No.	Cumulative % Total	Ind. Cutset %	Frequency	Cut Set Terms
1	22.4	22.4	4.90E-06	CDP-MOD-CC-MODM4
2	44.8	22.4	4.90E-06	POD-MOD-CC-MODM4
3	58.5	13.7	3.00E-06	BPD-ACC-UA-MANPI * OPR-XHE-FT-YPOD
4	67.5	9.0	1.97E-06	POD-SOF-LF-ERROR
5	76.5	9.0	1.97E-06	CDP-SOF-LF-ERROR
6	81.1	4.6	1.00E-06	BPD-ACC-UA-MANPI * YPD-ACC-UA-MANPI
7	82.8	1.7	3.71E-07	EHY-SOV-RO-BPSELB * OPR-XHE-FT-YPOD
8	84.0	1.2	2.70E-07	BPD-CON-LK-PIE * OPR-XHE-FT-YPOD
9	85.2	1.2	2.51E-07	BPD-CON-LK-PIE * EHY-HOV-FO-YPSUP
10	86.2	1.0	2.19E-07	BPD-PLC-SO-MPRVT * OPR-XHE-FT-YPOD
11	86.8	0.7	1.42E-07	CDP-PSP-CC-PSP4
12	87.5	0.7	1.42E-07	POD-PSP-CC-PSP4
13	88.1	0.6	1.34E-07	BPD-ACC-UA-MANPI * YPD-ACC-PB-MANPI
14	88.7	0.6	1.24E-07	EHY-SOV-RO-BPSELB * YPD-ACC-UA-MANPI
15	89.2	0.5	1.14E-07	OPR-PSP-CC-PSP6
16	89.7	0.5	1.05E-07	BPD-MOD-CC-MODM2 * OPR-XHE-FT-YPOD
17	90.1	0.5	9.77E-08	BPD-MOD-CC-MODM2 * EHY-HOV-FO-YPSUP
18	90.6	0.4	9.00E-08	BPD-CON-LK-PIE * YPD-ACC-UA-MANPI
19	91.0	0.4	9.00E-08	BPD-ACC-UA-MANPI * YPD-CON-LK-PIE
20	91.4	0.4	8.39E-08	BPD-SOV-SO-MPRVT * OPR-XHE-FT-YPOD
21	91.7	0.4	8.39E-08	EHY-PCV-SO-BPSEL * OPR-XHE-FT-YPOD
22	92.1	0.4	8.05E-08	BPD-CON-LF-OPNFC * BPD-CON-LF-UNPLG * OPR-XHE-FT-YPOD
23	92.5	0.4	7.78E-08	BPD-CON-LK-PIE * EHY-SOV-LF-YPSELY
24	92.8	0.4	7.78E-08	BPD-CON-LK-PIE * YPD-SOV-FO-YSSUP
25	93.2	0.4	7.50E-08	BPD-CON-LF-OPNFC * BPD-CON-LF-UNPLG * EHY-HOV-FO-YPSUP
26	93.5	0.3	7.30E-08	BPD-PLC-SO-MPRVT * YPD-ACC-UA-MANPI
27	93.9	0.3	7.30E-08	BPD-ACC-UA-MANPI * YPD-PLC-SO-MPRVT
28	94.1	0.3	5.76E-08	BPD-ACC-PB-MANPI * OPR-XHE-FT-YPOD
29	94.3	0.2	3.50E-08	BPD-MOD-CC-MODM2 * YPD-ACC-UA-MANPI
30	94.5	0.2	3.50E-08	BPD-ACC-UA-MANPI * YPD-MOD-CC-MODM2
31	94.6	0.2	3.07E-08	BPD-CON-LF-X10 * OPR-XHE-FT-YPOD
32	94.7	0.2	3.07E-08	BPD-CON-LF-X23 * OPR-XHE-FT-YPOD
33	94.9	0.2	3.07E-08	BPD-CON-LF-X23A * OPR-XHE-FT-YPOD
34	95.0	0.1	3.03E-08	BPD-MOD-CC-MODM2 * EHY-SOV-LF-YPSELY
35	95.2	0.1	3.03E-08	BPD-MOD-CC-MODM2 * YPD-SOV-FO-YSSUP
36	95.3	0.1	2.86E-08	BPD-CON-LF-X10 * EHY-HOV-FO-YPSUP
37	95.4	0.1	2.80E-08	BPD-ACC-UA-MANPI * EHY-PCV-LF-YPSEL
38	95.6	0.1	2.80E-08	BPD-ACC-UA-MANPI * YPD-SOV-SO-MPRVT
39	95.7	0.1	2.80E-08	BPD-SOV-SO-MPRVT * YPD-ACC-UA-MANPI
40	95.8	0.1	2.80E-08	EHY-PCV-SO-BPSEL * YPD-ACC-UA-MANPI
41	96.0	0.1	2.70E-08	CWS-XHE-FO-ENABL * DP-XHE-FO-ENABL * TPP-XHE-FO-ENABL

Confidential Treatment Requested by Transocean Holdings LLC TRN-HCEC-00056832

Cutset No.	Cumulative % Total	Ind. Cutset %	Frequency	Cut Set Terms
42	96.1	0.1	2.68E-08	BPD-CON-LF-OPNFC * BPD-CON-LF-UNPLG * YPD-ACC-UA-MANPI
43	96.2	0.1	2.68E-08	BPD-ACC-UA-MANPI * YPD-CON-LF-OPNFC * YPD-CON-LF-UNPLG
44	96.4	0.1	2.57E-08	CWS-XHE-FO-ENABL * DP-XHE-FR-MANED * OPR-XHE-FR-DP-M * TPP-XHE-FO-ENABL
45	96.5	0.1	2.57E-08	CWS-XHE-FO-ENABL * DP-XHE-FO-ENABL * OPR-XHE-FR-TPP-M * TPP-XHE-FR-MANED
46	96.6	0.1	2.57E-08	CWS-XHE-FR-MANED * DP-XHE-FO-ENABL * OPR-XHE-FR-CWSM * TPP-XHE-FO-ENABL
47	96.7	0.1	2.44E-08	CWS-XHE-FR-MANED * DP-XHE-FO-ENABL * OPR-XHE-FR-CWSM * OPR-XHE-FR-TPP-M * TPP-XHE-FR-MANED
48	96.8	0.1	2.44E-08	CWS-XHE-FO-ENABL * DP-XHE-FR-MANED * OPR-XHE-FR-DP-M * OPR-XHE-FR-TPP-M * TPP-XHE-FR-MANED
49	96.9	0.1	2.44E-08	CWS-XHE-FR-MANED * DP-XHE-FR-MANED * OPR-XHE-FR-CWSM * OPR-XHE-FR-DP-M * TPP-XHE-FO-ENABL
50	97.1	0.1	2.32E-08	BPD-CON-LF-OPNFC * BPD-CON-LF-UNPLG * YPD-SOV-FO-YSSUP
51	97.2	0.1	2.32E-08	BPD-CON-LF-OPNFC * BPD-CON-LF-UNPLG * EHY-SOV-LF-YPSELY
52	97.3	0.1	2.32E-08	CWS-XHE-FR-MANED * DP-XHE-FR-MANED * OPR-XHE-FR-CWSM * OPR-XHE-FR-DP-M * OPR-XHE-FR-TPP-M * TPP-XHE-FR-MANED
53	97.4	0.1	1.92E-08	BPD-ACC-PB-MANPI * YPD-ACC-UA-MANPI
54	97.5	0.1	1.66E-08	EHY-SOV-RO-BPSELB * YPD-ACC-PB-MANPI
55	97.5	0.1	1.57E-08	BPD-CON-LK-PIE * EHY-SHV-LF-YPSUP
56	97.6	0.1	1.57E-08	BPD-CON-LK-PIE * EHY-CHK-LF-RCSUP
57	97.7	0.1	1.57E-08	BPD-CON-LK-PIE * EHY-CHK-LF-YPSUP
58	97.7	0.1	1.28E-08	CDP-CPU-CC-CPU4
59	97.8	0.1	1.28E-08	POD-CPU-CC-CPU4
60	97.9	0.1	1.21E-08	BPD-CON-LK-PIE * YPD-ACC-PB-MANPI
61	97.9	0.1	1.14E-08	BPD-CBL-LF-CABLE * OPR-XHE-FT-YPOD
62	98.0	0.1	1.11E-08	EHY-SOV-RO-BPSELB * YPD-CON-LK-PIE
63	98.0	0.1	1.06E-08	BPD-CBL-LF-CABLE * EHY-HOV-FO-YPSUP
64	98.1	0.1	1.02E-08	BPD-ACC-UA-MANPI * YPD-CON-LF-X23
65	98.1	0.1	1.02E-08	BPD-ACC-UA-MANPI * YPD-CON-LF-X10
66	98.2	0.1	1.02E-08	BPD-ACC-UA-MANPI * YPD-CON-LF-X23A
67	98.2	0.1	1.02E-08	BPD-CON-LF-X10 * YPD-ACC-UA-MANPI
68	98.3	0.1	1.02E-08	BPD-CON-LF-X23 * YPD-ACC-UA-MANPI
69	98.3	0.1	1.02E-08	BPD-CON-LF-X23A * YPD-ACC-UA-MANPI
70	98.4	0.1	9.80E-09	BPD-PLC-SO-MPRVT * YPD-ACC-PB-MANPI
71	98.4	0.1	9.24E-09	BPD-ACC-UA-MANPI * YPD-REG-LO-MNREG
72	98.5	0.1	9.24E-09	BPD-ACC-UA-MANPI * YPD-REG-LF-M3KSI
73	98.5	0.1	9.02E-09	EHY-SOV-RO-BPSELB * YPD-PLC-SO-MPRVT
74	98.6	0.1	8.84E-09	BPD-CON-LF-X10 * EHY-SOV-LF-YPSELY
75	98.6	0.1	8.84E-09	BPD-CON-LF-X10 * YPD-SOV-FO-YSSUP
76	98.7	0.0	8.10E-09	BPD-CON-LK-PIE * YPD-CON-LK-PIE
77	98.7	0.0	6.57E-09	BPD-PLC-SO-MPRVT * YPD-CON-LK-PIE
78	98.7	0.0	6.57E-09	BPD-CON-LK-PIE * BPD-PLC-SO-CF-OP
79	98.8	0.0	6.57E-09	BPD-CON-LK-PIE * YPD-PLC-SO-MPRVT
80	98.8	0.0	6.11E-09	BPD-MOD-CC-MODM2 * EHY-SHV-LF-YPSUP

Confidential Treatment Requested by Transocean Holdings LLC TRN-HCEC-00056833

Cutset No.	Cumulative % Total	Ind. Cutset %	Frequency	Cut Set Terms
81	98.8	0.0	6.11E-09	BPD-MOD-CC-MODM2 * EHY-CHK-LF-RCSUP
82	98.9	0.0	6.11E-09	BPD-MOD-CC-MODM2 * EHY-CHK-LF-YPSUP
83	98.9	0.0	5.91E-09	CWS-XHE-FO-ENABL * OPR-SOF-LF-ERROR
84	98.9	0.0	5.61E-09	CWS-XHE-FR-MANED * OPR-SOF-LF-ERROR * OPR-XHE-FR-CWSM
85	99.0	0.0	5.32E-09	BPD-PLC-SO-MPRVT * YPD-PLC-SO-MPRVT
86	99.0	0.0	4.70E-09	BPD-MOD-CC-MODM2 * YPD-ACC-PB-MANPI
87	99.0	0.0	4.69E-09	BPD-CON-LF-OPNFC * BPD-CON-LF-UNPLG * EHY-SHV-LF-YPSUP
88	99.0	0.0	4.69E-09	BPD-CON-LF-OPNFC * BPD-CON-LF-UNPLG * EHY-CHK-LF-RCSUP
89	99.1	0.0	4.69E-09	BPD-CON-LF-OPNFC * BPD-CON-LF-UNPLG * EHY-CHK-LF-YPSUP
90	99.1	0.0	4.50E-09	CWS-XHE-FO-ENABL * DP-XHE-FR-UNMAN * OPR-XHE-FR-DP-A * TPP-XHE-FO-ENABL
91	99.1	0.0	4.50E-09	CWS-XHE-FO-ENABL * DP-XHE-FO-ENABL * OPR-XHE-FR-TPP-A * TPP-XHE-FR-UNMAN
92	99.1	0.0	4.50E-09	CWS-XHE-FR-UNMAN * DP-XHE-FO-ENABL * OPR-XHE-FR-CWSA * TPP-XHE-FO-ENABL
93	99.2	0.0	4.36E-09	EHY-CHK-LF-HLSUP * EHY-CHK-LF-RCSUP
94	99.2	0.0	4.33E-09	EHY-SOV-RO-BPSELB * YPD-MOD-CC-MODM2
95	99.2	0.0	4.28E-09	CWS-XHE-FR-MANED * DP-XHE-FO-ENABL * OPR-XHE-FR-CWSM * OPR-XHE-FR-TPP-A * TPP-XHE-FR-UNMAN
96	99.2	0.0	4.28E-09	CWS-XHE-FO-ENABL * DP-XHE-FR-UNMAN * OPR-XHE-FR-DP-A * OPR-XHE-FR-TPP-M * TPP-XHE-FR-MANED
97	99.3	0.0	4.28E-09	CWS-XHE-FR-UNMAN * DP-XHE-FO-ENABL * OPR-XHE-FR-CWSA * OPR-XHE-FR-TPP-M * TPP-XHE-FR-MANED
98	99.3	0.0	4.28E-09	CWS-XHE-FO-ENABL * DP-XHE-FR-MANED * OPR-XHE-FR-DP-M * OPR-XHE-FR-TPP-A * TPP-XHE-FR-UNMAN
99	99.3	0.0	4.28E-09	CWS-XHE-FR-MANED * DP-XHE-FR-UNMAN * OPR-XHE-FR-CWSM * OPR-XHE-FR-DP-A * TPP-XHE-FO-ENABL
100	99.3	0.0	4.28E-09	CWS-XHE-FR-UNMAN * DP-XHE-FR-MANED * OPR-XHE-FR-CWSA * OPR-XHE-FR-DP-M * TPP-XHE-FO-ENABL

Confidential Treatment Requested by Transocean Holdings LLC TRN-HCEC-00056834

Appendix D

Importance Analysis Results

Failure to Perform EDS Functions

IMPORTANCE MEASURES REPORT (Alternate Cut Sets)
Family: HORIZON
Fault Tree : 1-EDS
(Sorted by Fussell-Vesely Importance)

Event Name	Num. of Occ.	Probability of Failure	Fussell-Vesely Importance	Risk Reduction Ratio	Risk Increase Ratio
EHY-SHV-LF-USR-F	1	1.75E-04	5.60E-01	2.27E+00	3.20E+03
EHY-CKV-FC-LIK	8	3.85E-03	5.02E-02	1.05E+00	1.40E+01
EHY-CKV-FC-UIK	8	3.85E-03	5.02E-02	1.05E+00	1.40E+01
EHY-CKV-FC-UOC	8	3.85E-03	5.02E-02	1.05E+00	1.40E+01
EHY-CKV-FC-UIC	8	3.85E-03	5.02E-02	1.05E+00	1.40E+01
EHY-CKV-FC-LIC	8	3.85E-03	5.02E-02	1.05E+00	1.40E+01
EHY-CKV-FC-LOC	8	3.85E-03	5.02E-02	1.05E+00	1.40E+01
EHY-CKV-FC-UOK	8	3.85E-03	5.02E-02	1.05E+00	1.40E+01
EHY-CKV-FC-LOK	8	3.85E-03	5.02E-02	1.05E+00	1.40E+01
INDICATE-EDS	1	1.00E-05	3.20E-02	1.03E+00	3.20E+03
OPR-XHE-FO-EDS	1	1.00E-05	3.20E-02	1.03E+00	3.20E+03
OPR-XHE-FT-YPOD	125	3.00E-03	3.16E-02	1.03E+00	1.15E+01
POD-RAM-LF-CASNG	33	5.00E-02	2.81E-02	1.03E+00	1.53E+00
EHY-SHV-LF-CSR-F	1	1.75E-04	2.80E-02	1.03E+00	1.61E+02
POD-MOD-CC-MODM4	1	4.90E-06	1.57E-02	1.02E+00	3.20E+03
CDP-MOD-CC-MODM4	1	4.90E-06	1.57E-02	1.02E+00	3.20E+03
BPD-ACC-UA-PSREG	47	1.00E-03	1.57E-02	1.02E+00	1.66E+01
BPD-ACC-UA-MANPI	41	1.00E-03	1.44E-02	1.02E+00	1.54E+01
EHY-SHV-LF-SDISR	51	1.04E-03	1.18E-02	1.01E+00	1.23E+01
EHY-SHV-LF-SDIS1	51	1.04E-03	1.18E-02	1.01E+00	1.23E+01
EHY-SHV-LF-SDIS2	51	1.04E-03	1.18E-02	1.01E+00	1.23E+01
EHY-SHV-LF-PDISR	40	1.04E-03	1.17E-02	1.01E+00	1.23E+01
EHY-SHV-LF-PDIS1	40	1.04E-03	1.17E-02	1.01E+00	1.23E+01
EHY-SHV-LF-PDIS2	40	1.04E-03	1.17E-02	1.01E+00	1.23E+01
BPD-HOV-FO-SDISC	114	1.65E-02	8.17E-03	1.01E+00	1.49E+00
BPD-HOV-FO-PDISC	101	1.65E-02	7.98E-03	1.01E+00	1.48E+00
POD-SOF-LF-ERROR	1	1.97E-06	6.31E-03	1.01E+00	3.20E+03
CDP-SOF-LF-ERROR	1	1.97E-06	6.31E-03	1.01E+00	3.20E+03
YPD-ACC-UA-PSREG	44	1.00E-03	6.05E-03	1.01E+00	7.04E+00
YPD-HOV-FO-PDISC	91	1.65E-02	4.86E-03	1.01E+00	1.29E+00
YPD-ACC-UA-MANPI	41	1.00E-03	4.79E-03	1.01E+00	5.78E+00
YPD-HOV-FO-SDISC	91	1.65E-02	4.73E-03	1.01E+00	1.28E+00
BPD-CON-LK-PIE	51	9.00E-05	3.28E-03	1.00E+00	3.73E+01
EHY-SOV-RO-BPSELB	45	1.24E-04	2.44E-03	1.00E+00	2.07E+01
EHY-SHV-LF-UIK-O	8	1.75E-04	2.28E-03	1.00E+00	1.40E+01
EHY-SHV-LF-UOK-O	8	1.75E-04	2.28E-03	1.00E+00	1.40E+01
EHY-SHV-LF-UOC-O	8	1.75E-04	2.28E-03	1.00E+00	1.40E+01
EHY-SHV-LF-LOK-O	8	1.75E-04	2.28E-03	1.00E+00	1.40E+01
EHY-SHV-LF-LOC-O	8	1.75E-04	2.28E-03	1.00E+00	1.40E+01

Confidential Treatment Requested by Transocean Holdings LLC TRN-HCEC-00056836

Event Name	Num. of Occ.	Probability of Failure	Fussell-Vesely Importance	Risk Reduction Ratio	Risk Increase Ratio
EHY-SHV-LF-LIC-O	8	1.75E-04	2.28E-03	1.00E+00	1.40E+01
EHY-SHV-LF-LIK-O	8	1.75E-04	2.28E-03	1.00E+00	1.40E+01
EHY-SHV-LF-UIC-O	8	1.75E-04	2.28E-03	1.00E+00	1.40E+01
EHY-HOV-FO-BSRHP	46	2.79E-03	1.98E-03	1.00E+00	1.71E+00
EHY-SHV-LF-USRNR	17	1.75E-04	1.74E-03	1.00E+00	1.10E+01
EHY-HOV-FO-YPSUP	16	2.79E-03	1.51E-03	1.00E+00	1.54E+00
BPD-MOD-CC-MODM2	44	3.50E-05	1.27E-03	1.00E+00	3.72E+01
BPD-PLC-SO-LPRVT	26	7.30E-05	1.14E-03	1.00E+00	1.66E+01
BPD-PLC-SO-MPRVT	23	7.30E-05	1.05E-03	1.00E+00	1.54E+01
BPD-CON-LF-OPNFC	44	2.13E-01	9.77E-04	1.00E+00	1.00E+00
BPD-CON-LF-UNPLG	44	1.26E-04	9.77E-04	1.00E+00	8.74E+00
YPD-CON-LK-PIE	37	9.00E-05	8.72E-04	1.00E+00	1.07E+01
YPD-ACC-PB-PSREG	37	1.34E-04	8.13E-04	1.00E+00	7.04E+00
YPD-ACC-PB-MANPI	25	1.34E-04	6.42E-04	1.00E+00	5.77E+00
BPD-HOV-LF-LIK	9	3.85E-03	5.59E-04	1.00E+00	1.15E+00
BPD-HOV-LF-LOK	9	3.85E-03	5.59E-04	1.00E+00	1.15E+00
BPD-HOV-LF-UOC	9	3.85E-03	5.59E-04	1.00E+00	1.15E+00
BPD-HOV-LF-UIC	9	3.85E-03	5.59E-04	1.00E+00	1.15E+00
BPD-HOV-LF-UOK	9	3.85E-03	5.59E-04	1.00E+00	1.15E+00
BPD-HOV-LF-UIK	9	3.85E-03	5.59E-04	1.00E+00	1.15E+00
BPD-HOV-LF-LOC	9	3.85E-03	5.59E-04	1.00E+00	1.15E+00
BPD-HOV-LF-LIC	9	3.85E-03	5.59E-04	1.00E+00	1.15E+00
EHY-PCV-SO-BPSEL	31	2.80E-05	5.49E-04	1.00E+00	2.06E+01
EHY-SOV-LF-YPSELY	14	8.65E-04	4.74E-04	1.00E+00	1.55E+00
YPD-SOV-FO-YSSUP	9	8.65E-04	4.64E-04	1.00E+00	1.54E+00
POD-PSP-CC-PSP4	1	1.42E-07	4.55E-04	1.00E+00	3.20E+03
CDP-PSP-CC-PSP4	1	1.42E-07	4.55E-04	1.00E+00	3.20E+03
YPD-PLC-SO-LPRVT	23	7.30E-05	4.38E-04	1.00E+00	7.00E+00
BPD-SOV-SO-LPRVT	24	2.80E-05	4.36E-04	1.00E+00	1.66E+01
BPD-SOV-FO-SDISC	40	8.65E-04	4.24E-04	1.00E+00	1.49E+00
BPD-SOV-FO-PDISC	39	8.65E-04	4.14E-04	1.00E+00	1.48E+00
BPD-SOV-FC-PDS-L	39	8.65E-04	4.14E-04	1.00E+00	1.48E+00
CWS-XHE-FO-ENABL	11	3.00E-03	4.08E-04	1.00E+00	1.14E+00
BPD-SOV-SO-MPRVT	17	2.80E-05	4.02E-04	1.00E+00	1.53E+01
DP-XHE-FO-ENABL	11	3.00E-03	3.90E-04	1.00E+00	1.13E+00
TPP-XHE-FO-ENABL	11	3.00E-03	3.90E-04	1.00E+00	1.13E+00
CWS-XHE-FR-MANED	11	9.50E-01	3.87E-04	1.00E+00	1.00E+00
OPR-XHE-FR-CWSM	11	3.00E-03	3.87E-04	1.00E+00	1.13E+00
BPD-HOV-FO-USRNP	39	2.79E-03	3.85E-04	1.00E+00	1.14E+00
OPR-XHE-FR-DP-M	11	3.00E-03	3.71E-04	1.00E+00	1.12E+00
DP-XHE-FR-MANED	11	9.50E-01	3.71E-04	1.00E+00	1.00E+00
OPR-XHE-FR-TPP-M	11	3.00E-03	3.71E-04	1.00E+00	1.12E+00
TPP-XHE-FR-MANED	11	9.50E-01	3.71E-04	1.00E+00	1.00E+00
BPD-CON-LF-X10	37	1.02E-05	3.70E-04	1.00E+00	3.70E+01

Confidential Treatment Requested by Transocean Holdings LLC TRN-HCEC-00056837

Event Name	Num of Occ.	Probability of Failure	Fussell-Vesely Importance	Risk Reduction Ratio	Risk Increase Ratio
OPR-PSP-CC-PSP6	1	1.14E-07	3.65E-04	1.00E+00	3.20E+03
YPD-PLC-SO-MPRVT	20	7.30E-05	3.47E-04	1.00E+00	5.76E+00
YPD-MOD-CC-MODM2	29	3.50E-05	3.37E-04	1.00E+00	1.06E+01
BPD-ACC-PB-PSREG	23	1.92E-05	2.99E-04	1.00E+00	1.66E+01
BPD-ACC-PB-MANPI	16	1.92E-05	2.76E-04	1.00E+00	1.53E+01
EHY-PCV-LF-YPSEL	29	2.80E-05	2.70E-04	1.00E+00	1.06E+01
YPD-CON-LF-UNPLG	29	1.26E-04	2.59E-04	1.00E+00	3.05E+00
YPD-CON-LF-OPNFC	29	2.13E-01	2.59E-04	1.00E+00	1.00E+00
YPD-SOV-FO-PDISC	33	8.65E-04	2.51E-04	1.00E+00	1.29E+00
YPD-SOV-FO-SDISC	31	8.65E-04	2.43E-04	1.00E+00	1.28E+00
YPD-HOV-LF-LOK	5	3.85E-03	2.35E-04	1.00E+00	1.06E+00
YPD-HOV-LF-UIK	5	3.85E-03	2.35E-04	1.00E+00	1.06E+00
YPD-HOV-LF-UIC	5	3.85E-03	2.35E-04	1.00E+00	1.06E+00
YPD-HOV-LF-LOC	5	3.85E-03	2.35E-04	1.00E+00	1.06E+00
YPD-HOV-LF-LIC	5	3.85E-03	2.35E-04	1.00E+00	1.06E+00
YPD-HOV-LF-UOK	5	3.85E-03	2.35E-04	1.00E+00	1.06E+00
YPD-HOV-LF-UOC	5	3.85E-03	2.35E-04	1.00E+00	1.06E+00
YPD-HOV-LF-LIK	5	3.85E-03	2.35E-04	1.00E+00	1.06E+00
YPD-HOV-FO-USRNP	33	2.79E-03	2.05E-04	1.00E+00	1.07E+00
BPD-CON-LF-X23A	25	1.02E-05	1.99E-04	1.00E+00	2.04E+01
BPD-CON-LF-X23	25	1.02E-05	1.99E-04	1.00E+00	2.04E+01
BPD-HOV-FO-USRHP	23	2.79E-03	1.89E-04	1.00E+00	1.07E+00
YPD-SOV-SO-LPRVT	23	2.80E-05	1.68E-04	1.00E+00	7.00E+00
BPD-CBL-LF-CABLE	24	3.81E-06	1.36E-04	1.00E+00	3.65E+01
YPD-SOV-SO-MPRVT	15	2.80E-05	1.32E-04	1.00E+00	5.72E+00
BPD-SOV-FC-UIC-O	8	8.65E-04	1.25E-04	1.00E+00	1.15E+00
BPD-SOV-FC-LOK-O	8	8.65E-04	1.25E-04	1.00E+00	1.15E+00
BPD-SOV-FC-UOC-O	8	8.65E-04	1.25E-04	1.00E+00	1.15E+00
BPD-SOV-FC-LIK-O	8	8.65E-04	1.25E-04	1.00E+00	1.15E+00
BPD-SOV-FC-LIC-O	8	8.65E-04	1.25E-04	1.00E+00	1.15E+00
BPD-SOV-FC-UIK-O	8	8.65E-04	1.25E-04	1.00E+00	1.15E+00
BPD-SOV-FC-UOK-O	8	8.65E-04	1.25E-04	1.00E+00	1.15E+00
BPD-SOV-FC-LOC-O	8	8.65E-04	1.25E-04	1.00E+00	1.15E+00
EHY-SHV-LF-UHPSR	19	1.75E-04	1.22E-04	1.00E+00	1.70E+00
BPD-SOV-FC-BSR-O	21	8.65E-04	1.15E-04	1.00E+00	1.13E+00
BPD-SOV-FO-USRNP	21	8.65E-04	1.15E-04	1.00E+00	1.13E+00
EHY-CHK-LF-RCSUP	8	1.75E-04	1.11E-04	1.00E+00	1.63E+00
YPD-CON-LF-X10	26	1.02E-05	9.79E-05	1.00E+00	1.06E+01
YPD-CON-LF-X23A	26	1.02E-05	9.79E-05	1.00E+00	1.06E+01
YPD-CON-LF-X23	26	1.02E-05	9.79E-05	1.00E+00	1.06E+01
EHY-HOV-FO-CSRHP	15	2.79E-03	9.52E-05	1.00E+00	1.03E+00
EHY-SHV-LF-YPSUP	6	1.75E-04	9.34E-05	1.00E+00	1.53E+00
EHY-CHK-LF-YPSUP	6	1.75E-04	9.34E-05	1.00E+00	1.53E+00
YPD-REG-LF-M3KSI	23	9.24E-06	8.76E-05	1.00E+00	1.05E+01

Confidential Treatment Requested by Transocean Holdings LLC TRN-HCEC-00056838

Event Name	Num. of Occ.	Probability of Failure	Fussell-Vesely Importance	Risk Reduction Ratio	Risk Increase Ratio
EHY-SHV-LF-CSRNR	6	1.75E-04	8.59E-05	1.00E+00	1.49E+00
OPR-XHE-FR-CWSA	10	1.00E-02	6.77E-05	1.00E+00	1.01E+00
CWS-XHE-FR-UNMAN	10	5.00E-02	6.77E-05	1.00E+00	1.00E+00
TPP-XHE-FR-UNMAN	9	5.00E-02	6.46E-05	1.00E+00	1.00E+00
DP-XHE-FR-UNMAN	9	5.00E-02	6.46E-05	1.00E+00	1.00E+00
OPR-XHE-FR-TPP-A	9	1.00E-02	6.46E-05	1.00E+00	1.01E+00
OPR-XHE-FR-DP-A	9	1.00E-02	6.46E-05	1.00E+00	1.01E+00
YPD-HOV-FO-USRHP	20	2.79E-03	6.27E-05	1.00E+00	1.02E+00
YPD-SOV-FC-BSR-O	16	8.65E-04	5.99E-05	1.00E+00	1.07E+00
YPD-SOV-FO-USRNP	16	8.65E-04	5.99E-05	1.00E+00	1.07E+00
BPD-SOV-FO-USRHP	15	8.65E-04	5.67E-05	1.00E+00	1.07E+00
YPD-REG-LO-PSREG	19	9.24E-06	5.45E-05	1.00E+00	6.89E+00
YPD-SOV-FC-UIK-O	4	8.65E-04	5.27E-05	1.00E+00	1.06E+00
YPD-SOV-FC-UOK-O	4	8.65E-04	5.27E-05	1.00E+00	1.06E+00
YPD-SOV-FC-LOC-O	4	8.65E-04	5.27E-05	1.00E+00	1.06E+00
YPD-SOV-FC-UOC-O	4	8.65E-04	5.27E-05	1.00E+00	1.06E+00
YPD-SOV-FC-UIC-O	4	8.65E-04	5.27E-05	1.00E+00	1.06E+00
YPD-SOV-FC-LIK-O	4	8.65E-04	5.27E-05	1.00E+00	1.06E+00
YPD-SOV-FC-LOK-O	4	8.65E-04	5.27E-05	1.00E+00	1.06E+00
YPD-SOV-FC-LIC-O	4	8.65E-04	5.27E-05	1.00E+00	1.06E+00
BPD-PLC-SO-CF-OP	7	7.30E-05	4.59E-05	1.00E+00	1.63E+00
YPD-REG-LO-MNREG	9	9.24E-06	4.21E-05	1.00E+00	5.56E+00
CDP-CPU-CC-CPU4	1	1.28E-08	4.10E-05	1.00E+00	3.20E+03
POD-CPU-CC-CPU4	1	1.28E-08	4.10E-05	1.00E+00	3.20E+03
OPR-SOF-LF-ERROR	3	1.97E-06	4.01E-05	1.00E+00	2.13E+01
BPD-PSP-CC-PSP2	12	1.02E-06	3.46E-05	1.00E+00	3.48E+01
YPD-SOV-FC-PDS-L	18	1.24E-04	3.42E-05	1.00E+00	1.28E+00
YPD-CBL-LF-CABLE	12	3.81E-06	3.39E-05	1.00E+00	9.88E+00
BPD-REG-LF-M3KSI	8	1.32E-06	2.75E-05	1.00E+00	2.18E+01
EHY-CHK-LF-HLSUP	5	2.50E-05	2.47E-05	1.00E+00	1.99E+00
YPD-CHK-LF-BYPAS	7	1.04E-03	2.20E-05	1.00E+00	1.02E+00
YPD-FTR-LF-20MIC	7	2.52E-03	2.20E-05	1.00E+00	1.01E+00
BPD-REG-LO-PSREG	5	1.32E-06	1.90E-05	1.00E+00	1.54E+01
YPD-SOV-SO-ADUMP	4	2.80E-05	1.79E-05	1.00E+00	1.64E+00
EHY-PCV-SO-SDUMP	4	2.80E-05	1.79E-05	1.00E+00	1.64E+00
BPD-SOV-SO-ADUMP	4	2.80E-05	1.79E-05	1.00E+00	1.64E+00
BPD-REG-LO-MNREG	4	1.32E-06	1.79E-05	1.00E+00	1.45E+01
BPD-SOV-SO-CF-OP	7	2.80E-05	1.76E-05	1.00E+00	1.63E+00
EHY-HOV-SO-FLUSH	7	2.80E-05	1.76E-05	1.00E+00	1.63E+00
YPD-SOV-FO-USRHP	9	8.65E-04	1.70E-05	1.00E+00	1.02E+00
BPD-HOV-FO-CSRNP	8	2.79E-03	1.61E-05	1.00E+00	1.01E+00
EHY-PCV-LF-YPSUP	5	2.80E-05	1.49E-05	1.00E+00	1.53E+00
EHY-ACC-PB-STACC	4	1.92E-05	1.23E-05	1.00E+00	1.64E+00
YPD-HOV-FO-CSRNP	5	2.79E-03	8.14E-06	1.00E+00	1.00E+00

Confidential Treatment Requested by Transocean Holdings LLC TRN-HCEC-00056839

Event Name	Num. of Occ.	Probability of Failure	Fussell-Vesely Importance	Risk Reduction Ratio	Risk Increase Ratio
BPD-HOV-FO-CSRHP	6	2.79E-03	8.09E-06	1.00E+00	1.00E+00
YPD-PSP-CC-PSP2	4	1.02E-06	7.82E-06	1.00E+00	8.66E+00
CDA-MOD-LF-A3	6	5.00E-04	7.62E-06	1.00E+00	1.02E+00
CDB-MOD-LF-A3	6	5.00E-04	7.62E-06	1.00E+00	1.02E+00
BPD-MOD-LF-A1	6	5.00E-04	7.62E-06	1.00E+00	1.02E+00
BPD-MOD-LF-A32	6	5.00E-04	7.62E-06	1.00E+00	1.02E+00
BPD-CHK-LF-BYPAS	5	1.04E-03	7.35E-06	1.00E+00	1.01E+00
BPD-FTR-LF-20MIC	5	3.60E-04	7.35E-06	1.00E+00	1.02E+00
CDB-MOD-CC-MODM2	3	3.50E-05	6.17E-06	1.00E+00	1.18E+00
CDA-MOD-CC-MODM2	3	3.50E-05	6.17E-06	1.00E+00	1.18E+00
BPD-ISO-SO-ISMTR	6	2.00E-07	6.10E-06	1.00E+00	3.14E+01
EHY-CDT-LF-HOT	4	5.72E-06	5.56E-06	1.00E+00	1.97E+00
CWS-SCR-LF-PANEL	4	5.00E-05	5.48E-06	1.00E+00	1.11E+00
EHY-SOV-LF-YPSELB	3	8.65E-04	5.44E-06	1.00E+00	1.01E+00
YPD-CON-LF-X39C	4	1.02E-05	5.31E-06	1.00E+00	1.52E+00
YPD-CON-LF-X39	4	1.02E-05	5.31E-06	1.00E+00	1.52E+00
EHY-REG-LF-BSR	1	9.24E-06	5.17E-06	1.00E+00	1.56E+00
EHY-SHV-LF-CHPSR	1	1.75E-04	4.89E-06	1.00E+00	1.03E+00
BPD-SOV-FO-CSRNP	7	8.65E-04	4.87E-06	1.00E+00	1.01E+00
BPD-SOV-FC-CSR-O	7	8.65E-04	4.87E-06	1.00E+00	1.01E+00
BPD-CON-LF-X23E	5	1.02E-05	3.84E-06	1.00E+00	1.38E+00
BPD-CON-LF-X36	5	1.02E-05	3.84E-06	1.00E+00	1.38E+00
BPD-CON-LF-X36A	5	1.02E-05	3.84E-06	1.00E+00	1.38E+00
EHY-CHK-LF-YPHOT	3	1.75E-04	3.55E-06	1.00E+00	1.02E+00
EHY-SHV-LF-YPHL	3	1.75E-04	3.55E-06	1.00E+00	1.02E+00
EHY-CDT-LF-RIGID	4	5.72E-06	3.24E-06	1.00E+00	1.57E+00
CP-PSP-CC-PSP4	2	1.42E-07	2.66E-06	1.00E+00	1.97E+01
YPD-SOV-FC-CSR-O	5	8.65E-04	2.52E-06	1.00E+00	1.00E+00
BPD-SOV-FO-CSRHP	4	8.65E-04	2.27E-06	1.00E+00	1.00E+00
YPD-CON-LF-X36	4	1.02E-05	2.22E-06	1.00E+00	1.22E+00
YPD-CON-LF-X36A	4	1.02E-05	2.22E-06	1.00E+00	1.22E+00
YPD-CON-LF-X23E	4	1.02E-05	2.22E-06	1.00E+00	1.22E+00
BPD-CPU-CC-CPU2	2	9.17E-08	1.70E-06	1.00E+00	1.95E+01
YPD-HOV-FO-CSRHP	2	2.79E-03	1.64E-06	1.00E+00	1.00E+00
CDB-MOD-LF-A31	2	5.00E-04	1.60E-06	1.00E+00	1.00E+00
YPD-MOD-LF-A32	2	5.00E-04	1.60E-06	1.00E+00	1.00E+00
CDA-MOD-LF-A31	2	5.00E-04	1.60E-06	1.00E+00	1.00E+00
YPD-MOD-LF-A1	2	5.00E-04	1.60E-06	1.00E+00	1.00E+00
YPD-ISO-SO-ISMTR	2	2.00E-07	1.28E-06	1.00E+00	7.40E+00
CDA-BUS-LF-VME-A	1	1.00E-05	1.12E-06	1.00E+00	1.11E+00
CDA-BUS-LF-PROFI	1	1.00E-05	1.12E-06	1.00E+00	1.11E+00
CDB-BUS-LF-PROFI	1	1.00E-05	1.12E-06	1.00E+00	1.11E+00
CDB-BUS-LF-VME-B	1	1.00E-05	1.12E-06	1.00E+00	1.11E+00

Confidential Treatment Requested by Transocean Holdings LLC TRN-HCEC-00056840

Failure to Close Choke Lines

IMPORTANCE MEASURES REPORT (Alternate Cut Sets)
Family: HORIZON
Fault Tree : 1-EDS
(Sorted by Fussell-Vesely Importance)

Event Name	Num of Occ	Probability of Failure	Fussell-Vesely Importance	Risk Reduction Ratio	Risk Increase Ratio
EHY-CKV-FC-UOC	8	3.85E-03	4.72E-01	1.89E+00	1.23E+02
EHY-CKV-FC-LOC	8	3.85E-03	4.72E-01	1.89E+00	1.23E+02
EHY-CKV-FC-UIC	8	3.85E-03	4.72E-01	1.89E+00	1.23E+02
EHY-CKV-FC-LIC	8	3.85E-03	4.72E-01	1.89E+00	1.23E+02
EHY-SHV-LF-LOC-O	8	1.75E-04	2.14E-02	1.02E+00	1.24E+02
EHY-SHV-LF-UIC-O	8	1.75E-04	2.14E-02	1.02E+00	1.24E+02
EHY-SHV-LF-LIC-O	8	1.75E-04	2.14E-02	1.02E+00	1.24E+02
EHY-SHV-LF-UOC-O	8	1.75E-04	2.14E-02	1.02E+00	1.24E+02
OPR-XHE-FT-YPOD	24	3.00E-03	1.09E-02	1.01E+00	4.62E+00
BPD-HOV-LF-UOC	9	3.85E-03	5.26E-03	1.01E+00	2.36E+00
BPD-HOV-LF-LOC	9	3.85E-03	5.26E-03	1.01E+00	2.36E+00
BPD-HOV-LF-UIC	9	3.85E-03	5.26E-03	1.01E+00	2.36E+00
BPD-HOV-LF-LIC	9	3.85E-03	5.26E-03	1.01E+00	2.36E+00
YPD-HOV-LF-UOC	5	3.85E-03	2.22E-03	1.00E+00	1.57E+00
YPD-HOV-LF-UIC	5	3.85E-03	2.22E-03	1.00E+00	1.57E+00
YPD-HOV-LF-LIC	5	3.85E-03	2.22E-03	1.00E+00	1.57E+00
YPD-HOV-LF-LOC	5	3.85E-03	2.22E-03	1.00E+00	1.57E+00
BPD-SOV-FC-UOC-O	8	8.65E-04	1.18E-03	1.00E+00	2.36E+00
BPD-SOV-FC-LIC-O	8	8.65E-04	1.18E-03	1.00E+00	2.36E+00
BPD-SOV-FC-LOC-O	8	8.65E-04	1.18E-03	1.00E+00	2.36E+00
BPD-SOV-FC-UIC-O	8	8.65E-04	1.18E-03	1.00E+00	2.36E+00
YPD-SOV-FC-UIC-O	4	8.65E-04	4.95E-04	1.00E+00	1.57E+00
YPD-SOV-FC-UOC-O	4	8.65E-04	4.95E-04	1.00E+00	1.57E+00
YPD-SOV-FC-LOC-O	4	8.65E-04	4.95E-04	1.00E+00	1.57E+00
YPD-SOV-FC-LIC-O	4	8.65E-04	4.95E-04	1.00E+00	1.57E+00

Confidential Treatment Requested by Transocean Holdings LLC TRN-HCEC-00056841

Failure to Close Kill Lines

IMPORTANCE MEASURES REPORT (Alternate Cut Sets)
Family: HORIZON
Fault Tree : 1-EDS
(Sorted by Fussell-Vesely Importance)

Event Name	Num. of Occ.	Probability of Failure	Fussell-Vesely Importance	Risk Reduction Ratio	Risk Increase Ratio
EHY-CKV-FC-UOK	8	3.85E-03	4.72E-01	1.89E+00	1.23E+02
EHY-CKV-FC-UIK	8	3.85E-03	4.72E-01	1.89E+00	1.23E+02
EHY-CKV-FC-LOK	8	3.85E-03	4.72E-01	1.89E+00	1.23E+02
EHY-CKV-FC-LIK	8	3.85E-03	4.72E-01	1.89E+00	1.23E+02
EHY-SHV-LF-UIK-O	8	1.75E-04	2.14E-02	1.02E+00	1.24E+02
EHY-SHV-LF-LOK-O	8	1.75E-04	2.14E-02	1.02E+00	1.24E+02
EHY-SHV-LF-LIK-O	8	1.75E-04	2.14E-02	1.02E+00	1.24E+02
EHY-SHV-LF-UOK-O	8	1.75E-04	2.14E-02	1.02E+00	1.24E+02
OPR-XHE-FT-YPOD	24	3.00E-03	1.09E-02	1.01E+00	4.62E+00
BPD-HOV-LF-UOK	9	3.85E-03	5.26E-03	1.01E+00	2.36E+00
BPD-HOV-LF-LIK	9	3.85E-03	5.26E-03	1.01E+00	2.36E+00
BPD-HOV-LF-UIK	9	3.85E-03	5.26E-03	1.01E+00	2.36E+00
BPD-HOV-LF-LOK	9	3.85E-03	5.26E-03	1.01E+00	2.36E+00
YPD-HOV-LF-UOK	5	3.85E-03	2.22E-03	1.00E+00	1.57E+00
YPD-HOV-LF-UIK	5	3.85E-03	2.22E-03	1.00E+00	1.57E+00
YPD-HOV-LF-LIK	5	3.85E-03	2.22E-03	1.00E+00	1.57E+00
YPD-HOV-LF-LOK	5	3.85E-03	2.22E-03	1.00E+00	1.57E+00
BPD-SOV-FC-UOK-O	8	8.65E-04	1.18E-03	1.00E+00	2.36E+00
BPD-SOV-FC-LIK-O	8	8.65E-04	1.18E-03	1.00E+00	2.36E+00
BPD-SOV-FC-LOK-O	8	8.65E-04	1.18E-03	1.00E+00	2.36E+00
BPD-SOV-FC-UIK-O	8	8.65E-04	1.18E-03	1.00E+00	2.36E+00
YPD-SOV-FC-UIK-O	4	8.65E-04	4.95E-04	1.00E+00	1.57E+00
YPD-SOV-FC-UOK-O	4	8.65E-04	4.95E-04	1.00E+00	1.57E+00
YPD-SOV-FC-LOK-O	4	8.65E-04	4.95E-04	1.00E+00	1.57E+00
YPD-SOV-FC-LIK-O	4	8.65E-04	4.95E-04	1.00E+00	1.57E+00

Confidential Treatment Requested by Transocean Holdings LLC TRN-HCEC-00056842

Failure to Disconnect LMRP From Stack

IMPORTANCE MEASURES REPORT (Alternate Cut Sets)
Family: HORIZON
Fault Tree : 1-EDS
(Sorted by Fussell-Vesely Importance)

Event Name	Num. of Occ.	Probability of Failure	Fussell-Vesely Importance	Risk Reduction Ratio	Risk Increase Ratio
OPR-XHE-FT-YPOD	45	3.00E-03	1.57E-01	1.19E+00	5.31E+01
POD-MOD-CC-MODM4	1	4.90E-06	1.36E-01	1.16E+00	2.77E+04
CDP-MOD-CC-MODM4	1	4.90E-06	1.36E-01	1.16E+00	2.77E+04
BPD-ACC-UA-PSREG	47	1.00E-03	1.35E-01	1.16E+00	1.36E+02
EHY-SHV-LF-SDIS2	51	1.04E-03	1.02E-01	1.11E+00	9.89E+01
EHY-SHV-LF-SDISR	51	1.04E-03	1.02E-01	1.11E+00	9.89E+01
EHY-SHV-LF-SDIS1	51	1.04E-03	1.02E-01	1.11E+00	9.89E+01
EHY-SHV-LF-PDIS1	40	1.04E-03	1.01E-01	1.11E+00	9.83E+01
EHY-SHV-LF-PDISR	40	1.04E-03	1.01E-01	1.11E+00	9.83E+01
EHY-SHV-LF-PDIS2	40	1.04E-03	1.01E-01	1.11E+00	9.83E+01
BPD-HOV-FO-SDISC	114	1.65E-02	7.07E-02	1.08E+00	5.22E+00
BPD-HOV-FO-PDISC	101	1.65E-02	6.90E-02	1.07E+00	5.12E+00
CDP-SOF-LF-ERROR	1	1.97E-06	5.46E-02	1.06E+00	2.77E+04
POD-SOF-LF-ERROR	1	1.97E-06	5.46E-02	1.06E+00	2.77E+04
YPD-ACC-UA-PSREG	44	1.00E-03	5.23E-02	1.06E+00	5.32E+01
YPD-HOV-FO-PDISC	91	1.65E-02	4.20E-02	1.04E+00	3.51E+00
YPD-HOV-FO-SDISC	91	1.65E-02	4.09E-02	1.04E+00	3.44E+00
BPD-CON-LK-PIE	39	9.00E-05	2.52E-02	1.03E+00	2.80E+02
EHY-SOV-RO-BPSELB	33	1.24E-04	1.67E-02	1.02E+00	1.36E+02
EHY-HOV-FO-YPSUP	14	2.79E-03	1.30E-02	1.01E+00	5.64E+00
BPD-PLC-SO-LPRVT	26	7.30E-05	9.85E-03	1.01E+00	1.36E+02
BPD-MOD-CC-MODM2	37	3.50E-05	9.79E-03	1.01E+00	2.80E+02
BPD-CON-LF-OPNFC	37	2.13E-01	7.51E-03	1.01E+00	1.03E+00
BPD-CON-LF-UNPLG	37	1.26E-04	7.51E-03	1.01E+00	6.05E+01
YPD-ACC-PB-PSREG	37	1.34E-04	7.03E-03	1.01E+00	5.32E+01
YPD-CON-LK-PIE	25	9.00E-05	4.68E-03	1.01E+00	5.29E+01
EHY-SOV-LF-YPSELY	13	8.65E-04	4.08E-03	1.00E+00	5.71E+00
YPD-SOV-FO-YSSUP	9	8.65E-04	4.01E-03	1.00E+00	5.64E+00
POD-PSP-CC-PSP4	1	1.42E-07	3.93E-03	1.00E+00	2.77E+04
CDP-PSP-CC-PSP4	1	1.42E-07	3.93E-03	1.00E+00	2.77E+04
YPD-PLC-SO-LPRVT	23	7.30E-05	3.79E-03	1.00E+00	5.29E+01
EHY-PCV-SO-BPSEL	24	2.80E-05	3.77E-03	1.00E+00	1.36E+02
BPD-SOV-SO-LPRVT	24	2.80E-05	3.77E-03	1.00E+00	1.36E+02
BPD-SOV-FO-SDISC	40	8.65E-04	3.66E-03	1.00E+00	5.23E+00
BPD-SOV-FO-PDISC	39	8.65E-04	3.58E-03	1.00E+00	5.14E+00
BPD-SOV-FC-PDS-L	39	8.65E-04	3.58E-03	1.00E+00	5.14E+00
CWS-XHE-FO-ENABL	11	3.00E-03	3.53E-03	1.00E+00	2.17E+00
DP-XHE-FO-ENABL	11	3.00E-03	3.37E-03	1.00E+00	2.12E+00
TPP-XHE-FO-ENABL	11	3.00E-03	3.37E-03	1.00E+00	2.12E+00

Confidential Treatment Requested by Transocean Holdings LLC TRN-HCEC-00056843

Event Name	Num of Occ.	Probability of Failure	Fussell-Vesely Importance	Risk Reduction Ratio	Risk Increase Ratio
CWS-XHE-FR-MANED	11	9.50E-01	3.35E-03	1.00E+00	1.00E+00
OPR-XHE-FR-CWSM	11	3.00E-03	3.35E-03	1.00E+00	2.11E+00
OPR-XHE-FR-TPP-M	11	3.00E-03	3.21E-03	1.00E+00	2.07E+00
DP-XHE-FR-MANED	11	9.50E-01	3.21E-03	1.00E+00	1.00E+00
OPR-XHE-FR-DP-M	11	3.00E-03	3.21E-03	1.00E+00	2.07E+00
TPP-XHE-FR-MANED	11	9.50E-01	3.21E-03	1.00E+00	1.00E+00
OPR-PSP-CC-PSP6	1	1.14E-07	3.16E-03	1.00E+00	2.77E+04
BPD-CON-LF-X10	33	1.02E-05	2.85E-03	1.00E+00	2.79E+02
BPD-ACC-PB-PSREG	23	1.92E-05	2.59E-03	1.00E+00	1.36E+02
YPD-SOV-FO-PDISC	33	8.65E-04	2.17E-03	1.00E+00	3.50E+00
YPD-SOV-FO-SDISC	31	8.65E-04	2.10E-03	1.00E+00	3.43E+00
YPD-MOD-CC-MODM2	23	3.50E-05	1.82E-03	1.00E+00	5.29E+01
EHY-PCV-LF-YPSEL	23	2.80E-05	1.45E-03	1.00E+00	5.29E+01
YPD-SOV-SO-LPRVT	23	2.80E-05	1.45E-03	1.00E+00	5.29E+01
YPD-CON-LF-OPNFC	23	2.13E-01	1.39E-03	1.00E+00	1.01E+00
YPD-CON-LF-UNPLG	23	1.26E-04	1.39E-03	1.00E+00	1.21E+01
BPD-CON-LF-X23	21	1.02E-05	1.37E-03	1.00E+00	1.35E+02
BPD-CON-LF-X23A	21	1.02E-05	1.37E-03	1.00E+00	1.35E+02
BPD-CBL-LF-CABLE	20	3.81E-06	1.04E-03	1.00E+00	2.74E+02
EHY-CHK-LF-RCSUP	8	1.75E-04	9.56E-04	1.00E+00	6.47E+00
EHY-SHV-LF-YPSUP	6	1.75E-04	8.07E-04	1.00E+00	5.62E+00
EHY-CHK-LF-YPSUP	6	1.75E-04	8.07E-04	1.00E+00	5.62E+00
OPR-XHE-FR-CWSA	10	1.00E-02	5.86E-04	1.00E+00	1.06E+00
CWS-XHE-FR-UNMAN	10	5.00E-02	5.86E-04	1.00E+00	1.01E+00
TPP-XHE-FR-UNMAN	9	5.00E-02	5.58E-04	1.00E+00	1.01E+00
OPR-XHE-FR-TPP-A	9	1.00E-02	5.58E-04	1.00E+00	1.06E+00
OPR-XHE-FR-DP-A	9	1.00E-02	5.58E-04	1.00E+00	1.06E+00
DP-XHE-FR-UNMAN	9	5.00E-02	5.58E-04	1.00E+00	1.01E+00
YPD-CON-LF-X10	22	1.02E-05	5.30E-04	1.00E+00	5.28E+01
YPD-CON-LF-X23A	22	1.02E-05	5.30E-04	1.00E+00	5.28E+01
YPD-CON-LF-X23	22	1.02E-05	5.30E-04	1.00E+00	5.28E+01
YPD-REG-LF-M3KSI	19	9.24E-06	4.71E-04	1.00E+00	5.19E+01
YPD-REG-LO-PSREG	19	9.24E-06	4.71E-04	1.00E+00	5.19E+01
BPD-PLC-SO-CF-OP	7	7.30E-05	3.97E-04	1.00E+00	6.44E+00
CDP-CPU-CC-CPU4	1	1.28E-08	3.55E-04	1.00E+00	2.77E+04
POD-CPU-CC-CPU4	1	1.28E-08	3.55E-04	1.00E+00	2.77E+04
OPR-SOF-LF-ERROR	3	1.97E-06	3.46E-04	1.00E+00	1.77E+02
YPD-SOV-FC-PDS-L	18	1.24E-04	2.96E-04	1.00E+00	3.39E+00
BPD-PSP-CC-PSP2	10	1.02E-06	2.67E-04	1.00E+00	2.62E+02
EHY-CHK-LF-HLSUP	5	2.50E-05	2.14E-04	1.00E+00	9.56E+00
BPD-REG-LF-M3KSI	6	1.32E-06	1.96E-04	1.00E+00	1.49E+02
YPD-CBL-LF-CABLE	9	3.81E-06	1.77E-04	1.00E+00	4.74E+01
BPD-REG-LO-PSREG	5	1.32E-06	1.64E-04	1.00E+00	1.25E+02
BPD-SOV-SO-CF-OP	7	2.80E-05	1.52E-04	1.00E+00	6.44E+00
EHY-HOV-SO-FLUSH	7	2.80E-05	1.52E-04	1.00E+00	6.44E+00
EHY-PCV-LF-YPSUP	5	2.80E-05	1.28E-04	1.00E+00	5.59E+00

Confidential Treatment Requested by Transocean Holdings LLC TRN-HCEC-00056844

Event Name	Num of Occ	Probability of Failure	Fussell-Vesely Importance	Risk Reduction Ratio	Risk Increase Ratio
YPD-FTR-LF-20MIC	5	2.52E-03	1.13E-04	1.00E+00	1.05E+00
YPD-CHK-LF-BYPAS	5	1.04E-03	1.13E-04	1.00E+00	1.11E+00
CDB-MOD-LF-A3	5	5.00E-04	5.90E-05	1.00E+00	1.12E+00
BPD-MOD-LF-A32	5	5.00E-04	5.90E-05	1.00E+00	1.12E+00
CDA-MOD-LF-A3	5	5.00E-04	5.90E-05	1.00E+00	1.12E+00
BPD-MOD-LF-A1	5	5.00E-04	5.90E-05	1.00E+00	1.12E+00
CDB-MOD-CC-MODM2	3	3.50E-05	5.33E-05	1.00E+00	2.52E+00
CDA-MOD-CC-MODM2	3	3.50E-05	5.33E-05	1.00E+00	2.52E+00
BPD-CHK-LF-BYPAS	4	1.04E-03	5.32E-05	1.00E+00	1.05E+00
BPD-FTR-LF-20MIC	4	3.60E-04	5.32E-05	1.00E+00	1.15E+00
EHY-CDT-LF-HOT	4	5.72E-06	4.80E-05	1.00E+00	9.41E+00
CWS-SCR-LF-PANEL	4	5.00E-05	4.74E-05	1.00E+00	1.95E+00
BPD-ISO-SO-ISMTR	5	2.00E-07	4.72E-05	1.00E+00	2.36E+02
YPD-CON-LF-X39	4	1.02E-05	4.59E-05	1.00E+00	5.49E+00
YPD-CON-LF-X39C	4	1.02E-05	4.59E-05	1.00E+00	5.49E+00
YPD-PSP-CC-PSP2	3	1.02E-06	3.94E-05	1.00E+00	3.96E+01
BPD-CON-LF-X36	5	1.02E-05	3.32E-05	1.00E+00	4.25E+00
BPD-CON-LF-X36A	5	1.02E-05	3.32E-05	1.00E+00	4.25E+00
BPD-CON-LF-X23E	5	1.02E-05	3.32E-05	1.00E+00	4.25E+00
EHY-CDT-LF-RIGID	4	5.72E-06	2.80E-05	1.00E+00	5.90E+00
EHY-SOV-LF-YPSELB	2	8.65E-04	2.63E-05	1.00E+00	1.03E+00
CP-PSP-CC-PSP4	2	1.42E-07	2.30E-05	1.00E+00	1.63E+02
YPD-CON-LF-X36A	4	1.02E-05	1.92E-05	1.00E+00	2.88E+00
YPD-CON-LF-X36	4	1.02E-05	1.92E-05	1.00E+00	2.88E+00
YPD-CON-LF-X23E	4	1.02E-05	1.92E-05	1.00E+00	2.88E+00
EHY-CHK-LF-YPHOT	2	1.75E-04	1.72E-05	1.00E+00	1.10E+00
EHY-SHV-LF-YPHL	2	1.75E-04	1.72E-05	1.00E+00	1.10E+00
BPD-CPU-CC-CPU2	2	9.17E-08	1.47E-05	1.00E+00	1.61E+02
CDB-BUS-LF-VME-B	1	1.00E-05	9.69E-06	1.00E+00	1.97E+00
CDA-BUS-LF-PROFI	1	1.00E-05	9.69E-06	1.00E+00	1.97E+00
CDA-BUS-LF-VME-A	1	1.00E-05	9.69E-06	1.00E+00	1.97E+00
CDB-BUS-LF-PROFI	1	1.00E-05	9.69E-06	1.00E+00	1.97E+00
YPD-MOD-LF-A32	1	5.00E-04	6.92E-06	1.00E+00	1.01E+00
CDA-MOD-LF-A31	1	5.00E-04	6.92E-06	1.00E+00	1.01E+00
YPD-MOD-LF-A1	1	5.00E-04	6.92E-06	1.00E+00	1.01E+00
CDB-MOD-LF-A31	1	5.00E-04	6.92E-06	1.00E+00	1.01E+00
YPD-ISO-SO-ISMTR	1	2.00E-07	5.54E-06	1.00E+00	2.87E+01

Confidential Treatment Requested by Transocean Holdings LLC TRN-HCEC-00056845

Failure to Shear
IMPORTANCE MEASURES REPORT (Alternate Cut Sets)
Family: HORIZON
Fault Tree : SHEAR
(Sorted by Fussell-Vesely Importance)

Event Name	Num Of Occ	Probability of Failure	Fussell-Vesely Importance	Risk Reduction Ratio	Risk Increase Ratio
EHY-SHV-LF-USR-F	1	1.75E-04	8.48E-01	6.56E+00	4.85E+03
POD-RAM-LF-CASNG	33	5.00E-02	4.26E-02	1.04E+00	1.81E+00
EHY-SHV-LF-CSR-F	1	1.75E-04	4.24E-02	1.04E+00	2.44E+02
CDP-MOD-CC-MODM4	1	4.90E-06	2.38E-02	1.02E+00	4.85E+03
POD-MOD-CC-MODM4	1	4.90E-06	2.38E-02	1.02E+00	4.85E+03
BPD-ACC-UA-MANPI	41	1.00E-03	2.19E-02	1.02E+00	2.28E+01
OPR-XHE-FT-YPOD	48	3.00E-03	2.18E-02	1.02E+00	8.23E+00
CDP-SOF-LF-ERROR	1	1.97E-06	9.56E-03	1.01E+00	4.85E+03
POD-SOF-LF-ERROR	1	1.97E-06	9.56E-03	1.01E+00	4.85E+03
YPD-ACC-UA-MANPI	41	1.00E-03	7.25E-03	1.01E+00	8.24E+00
BPD-CON-LK-PIE	36	9.00E-05	4.25E-03	1.00E+00	4.80E+01
EHY-HOV-FO-BSRHP	46	2.79E-03	3.00E-03	1.00E+00	2.07E+00
EHY-SOV-RO-BPSELB	24	1.24E-04	2.70E-03	1.00E+00	2.28E+01
EHY-SHV-LF-USRNR	17	1.75E-04	2.64E-03	1.00E+00	1.61E+01
EHY-HOV-FO-YPSUP	12	2.79E-03	2.28E-03	1.00E+00	1.81E+00
BPD-MOD-CC-MODM2	30	3.50E-05	1.65E-03	1.00E+00	4.79E+01
BPD-PLC-SO-MPRVT	23	7.30E-05	1.59E-03	1.00E+00	2.28E+01
BPD-CON-LF-UNPLG	30	1.26E-04	1.27E-03	1.00E+00	1.10E+01
BPD-CON-LF-OPNFC	30	2.13E-01	1.27E-03	1.00E+00	1.01E+00
YPD-ACC-PB-MANPI	25	1.34E-04	9.72E-04	1.00E+00	8.23E+00
EHY-SOV-LF-YPSELY	12	8.65E-04	7.14E-04	1.00E+00	1.83E+00
YPD-SOV-FO-YSSUP	9	8.65E-04	7.03E-04	1.00E+00	1.81E+00
CDP-PSP-CC-PSP4	1	1.42E-07	6.89E-04	1.00E+00	4.85E+03
POD-PSP-CC-PSP4	1	1.42E-07	6.89E-04	1.00E+00	4.85E+03
YPD-CON-LK-PIE	22	9.00E-05	6.50E-04	1.00E+00	8.22E+00
CWS-XHE-FO-ENABL	11	3.00E-03	6.18E-04	1.00E+00	1.21E+00
BPD-SOV-SO-MPRVT	17	2.80E-05	6.08E-04	1.00E+00	2.27E+01
EHY-PCV-SO-BPSEL	17	2.80E-05	6.08E-04	1.00E+00	2.27E+01
DP-XHE-FO-ENABL	11	3.00E-03	5.91E-04	1.00E+00	1.20E+00
TPP-XHE-FO-ENABL	11	3.00E-03	5.91E-04	1.00E+00	1.20E+00
OPR-XHE-FR-CWSM	11	3.00E-03	5.87E-04	1.00E+00	1.20E+00
CWS-XHE-FR-MANED	11	9.50E-01	5.87E-04	1.00E+00	1.00E+00
BPD-HOV-FO-USRNP	39	2.79E-03	5.83E-04	1.00E+00	1.21E+00
TPP-XHE-FR-MANED	11	9.50E-01	5.62E-04	1.00E+00	1.00E+00
OPR-XHE-FR-TPP-M	11	3.00E-03	5.62E-04	1.00E+00	1.19E+00
OPR-XHE-FR-DP-M	11	3.00E-03	5.62E-04	1.00E+00	1.19E+00
DP-XHE-FR-MANED	11	9.50E-01	5.62E-04	1.00E+00	1.00E+00
OPR-PSP-CC-PSP6	1	1.14E-07	5.53E-04	1.00E+00	4.85E+03
YPD-PLC-SO-MPRVT	20	7.30E-05	5.26E-04	1.00E+00	8.20E+00

Confidential Treatment Requested by Transocean Holdings LLC TRN-HCEC-00056846

Event Name	Num Of Occ	Probability of Failure	Fussell-Vesely Importance	Risk Reduction Ratio	Risk Increase Ratio
BPD-CON-LF-X10	24	1.02E-05	4.80E-04	1.00E+00	4.77E+01
BPD-ACC-PB-MANPI	16	1.92E-05	4.17E-04	1.00E+00	2.27E+01
YPD-HOV-FO-USRNP	33	2.79E-03	3.11E-04	1.00E+00	1.11E+00
BPD-HOV-FO-USRHP	23	2.79E-03	2.86E-04	1.00E+00	1.10E+00
YPD-MOD-CC-MODM2	15	3.50E-05	2.50E-04	1.00E+00	8.15E+00
BPD-CON-LF-X23A	12	1.02E-05	2.21E-04	1.00E+00	2.25E+01
BPD-CON-LF-X23	12	1.02E-05	2.21E-04	1.00E+00	2.25E+01
EHY-PCV-LF-YPSEL	15	2.80E-05	2.00E-04	1.00E+00	8.15E+00
YPD-SOV-SO-MPRVT	15	2.80E-05	2.00E-04	1.00E+00	8.15E+00
YPD-CON-LF-OPNFC	15	2.13E-01	1.92E-04	1.00E+00	1.00E+00
YPD-CON-LF-UNPLG	15	1.26E-04	1.92E-04	1.00E+00	2.52E+00
EHY-SHV-LF-UHPSR	19	1.75E-04	1.85E-04	1.00E+00	2.06E+00
BPD-CBL-LF-CABLE	19	3.81E-06	1.78E-04	1.00E+00	4.75E+01
BPD-SOV-FC-BSR-O	21	8.65E-04	1.75E-04	1.00E+00	1.20E+00
BPD-SOV-FO-USRNP	21	8.65E-04	1.75E-04	1.00E+00	1.20E+00
EHY-CHK-LF-RCSUP	8	1.75E-04	1.67E-04	1.00E+00	1.96E+00
EHY-HOV-FO-CSRHP	15	2.79E-03	1.44E-04	1.00E+00	1.05E+00
EHY-CHK-LF-YPSUP	6	1.75E-04	1.41E-04	1.00E+00	1.81E+00
EHY-SHV-LF-YPSUP	6	1.75E-04	1.41E-04	1.00E+00	1.81E+00
EHY-SHV-LF-CSRNR	6	1.75E-04	1.30E-04	1.00E+00	1.74E+00
CWS-XHE-FR-UNMAN	10	5.00E-02	1.03E-04	1.00E+00	1.00E+00
OPR-XHE-FR-CWSA	10	1.00E-02	1.03E-04	1.00E+00	1.01E+00
OPR-XHE-FR-TPP-A	9	1.00E-02	9.78E-05	1.00E+00	1.01E+00
DP-XHE-FR-UNMAN	9	5.00E-02	9.78E-05	1.00E+00	1.00E+00
OPR-XHE-FR-DP-A	9	1.00E-02	9.78E-05	1.00E+00	1.01E+00
TPP-XHE-FR-UNMAN	9	5.00E-02	9.78E-05	1.00E+00	1.00E+00
YPD-HOV-FO-USRHP	20	2.79E-03	9.50E-05	1.00E+00	1.03E+00
YPD-SOV-FC-BSR-O	16	8.65E-04	9.08E-05	1.00E+00	1.11E+00
YPD-SOV-FO-USRNP	16	8.65E-04	9.08E-05	1.00E+00	1.11E+00
BPD-SOV-FO-USRHP	15	8.65E-04	8.59E-05	1.00E+00	1.10E+00
YPD-CON-LF-X23	12	1.02E-05	7.21E-05	1.00E+00	8.05E+00
YPD-CON-LF-X23A	12	1.02E-05	7.21E-05	1.00E+00	8.05E+00
YPD-CON-LF-X10	12	1.02E-05	7.21E-05	1.00E+00	8.05E+00
BPD-PLC-SO-CF-OP	7	7.30E-05	6.96E-05	1.00E+00	1.95E+00
YPD-REG-LO-MNREG	9	9.24E-06	6.38E-05	1.00E+00	7.90E+00
YPD-REG-LF-M3KSI	9	9.24E-06	6.38E-05	1.00E+00	7.90E+00
CDP-CPU-CC-CPU4	1	1.28E-08	6.21E-05	1.00E+00	4.85E+03
POD-CPU-CC-CPU4	1	1.28E-08	6.21E-05	1.00E+00	4.85E+03
OPR-SOF-LF-ERROR	3	1.97E-06	6.07E-05	1.00E+00	3.18E+01
BPD-PSP-CC-PSP2	9	1.02E-06	4.54E-05	1.00E+00	4.54E+01
EHY-CHK-LF-HLSUP	5	2.50E-05	3.75E-05	1.00E+00	2.50E+00
BPD-REG-LF-M3KSI	5	1.32E-06	3.26E-05	1.00E+00	2.57E+01
BPD-SOV-SO-ADUMP	4	2.80E-05	2.71E-05	1.00E+00	1.97E+00
YPD-SOV-SO-ADUMP	4	2.80E-05	2.71E-05	1.00E+00	1.97E+00
EHY-PCV-SO-SDUMP	4	2.80E-05	2.71E-05	1.00E+00	1.97E+00
BPD-REG-LO-MNREG	4	1.32E-06	2.71E-05	1.00E+00	2.15E+01

Confidential Treatment Requested by Transocean Holdings LLC TRN-HCEC-00056847

Event Name	Num. Of Occ.	Probability of Failure	Fussell-Vesely Importance	Risk Reduction Ratio	Risk Increase Ratio
BPD-SOV-SO-CF-OP	7	2.80E-05	2.67E-05	1.00E+00	1.95E+00
EHY-HOV-SO-FLUSH	7	2.80E-05	2.67E-05	1.00E+00	1.95E+00
YPD-CBL-LF-CABLE	8	3.81E-06	2.60E-05	1.00E+00	7.81E+00
YPD-SOV-FO-USRHP	9	8.65E-04	2.57E-05	1.00E+00	1.03E+00
BPD-HOV-FO-CSRNP	8	2.79E-03	2.44E-05	1.00E+00	1.01E+00
EHY-PCV-LF-YPSUP	5	2.80E-05	2.25E-05	1.00E+00	1.81E+00
EHY-ACC-PB-STACC	4	1.92E-05	1.86E-05	1.00E+00	1.97E+00
YPD-FTR-LF-20MIC	4	2.52E-03	1.63E-05	1.00E+00	1.01E+00
YPD-CHK-LF-BYPAS	4	1.04E-03	1.63E-05	1.00E+00	1.02E+00
YPD-HOV-FO-CSRNP	5	2.79E-03	1.23E-05	1.00E+00	1.00E+00
BPD-HOV-FO-CSRHP	6	2.79E-03	1.23E-05	1.00E+00	1.00E+00
CDA-MOD-LF-A3	5	5.00E-04	1.03E-05	1.00E+00	1.02E+00
CDB-MOD-LF-A3	5	5.00E-04	1.03E-05	1.00E+00	1.02E+00
BPD-MOD-LF-A1	5	5.00E-04	1.03E-05	1.00E+00	1.02E+00
BPD-MOD-LF-A32	5	5.00E-04	1.03E-05	1.00E+00	1.02E+00
CDA-MOD-CC-MODM2	3	3.50E-05	9.34E-06	1.00E+00	1.27E+00
CDB-MOD-CC-MODM2	3	3.50E-05	9.34E-06	1.00E+00	1.27E+00
BPD-FTR-LF-20MIC	3	3.60E-04	8.83E-06	1.00E+00	1.03E+00
BPD-CHK-LF-BYPAS	3	1.04E-03	8.83E-06	1.00E+00	1.01E+00
EHY-CDT-LF-HOT	4	5.72E-06	8.42E-06	1.00E+00	2.47E+00
CWS-SCR-LF-PANEL	4	5.00E-05	8.30E-06	1.00E+00	1.17E+00
BPD-ISO-SO-ISMTR	5	2.00E-07	8.27E-06	1.00E+00	4.22E+01
YPD-CON-LF-X39C	4	1.02E-05	8.04E-06	1.00E+00	1.79E+00
YPD-CON-LF-X39	4	1.02E-05	8.04E-06	1.00E+00	1.79E+00
EHY-REG-LF-BSR	1	9.24E-06	7.83E-06	1.00E+00	1.85E+00
EHY-SHV-LF-CHPSR	1	1.75E-04	7.40E-06	1.00E+00	1.04E+00
BPD-SOV-FO-CSRNP	7	8.65E-04	7.37E-06	1.00E+00	1.01E+00
BPD-SOV-FC-CSR-O	7	8.65E-04	7.37E-06	1.00E+00	1.01E+00
YPD-PSP-CC-PSP2	2	1.02E-06	5.56E-06	1.00E+00	6.45E+00
EHY-CDT-LF-RIGID	4	5.72E-06	4.90E-06	1.00E+00	1.86E+00
CP-PSP-CC-PSP4	2	1.42E-07	4.03E-06	1.00E+00	2.93E+01
YPD-SOV-FC-CSR-O	5	8.65E-04	3.82E-06	1.00E+00	1.00E+00
EHY-SOV-LF-YPSELB	1	8.65E-04	3.63E-06	1.00E+00	1.00E+00
BPD-SOV-FO-CSRHP	4	8.65E-04	3.43E-06	1.00E+00	1.00E+00
BPD-CPU-CC-CPU2	2	9.17E-08	2.58E-06	1.00E+00	2.91E+01
YPD-HOV-FO-CSRHP	2	2.79E-03	2.48E-06	1.00E+00	1.00E+00
EHY-SHV-LF-YPHL	1	1.75E-04	2.37E-06	1.00E+00	1.01E+00
EHY-CHK-LF-YPHOT	1	1.75E-04	2.37E-06	1.00E+00	1.01E+00
CDA-BUS-LF-PROFI	1	1.00E-05	1.70E-06	1.00E+00	1.17E+00
CDA-BUS-LF-VME-A	1	1.00E-05	1.70E-06	1.00E+00	1.17E+00
CDB-BUS-LF-VME-B	1	1.00E-05	1.70E-06	1.00E+00	1.17E+00
CDB-BUS-LF-PROFI	1	1.00E-05	1.70E-06	1.00E+00	1.17E+00
YPD-MOD-LF-A32	1	5.00E-04	1.21E-06	1.00E+00	1.00E+00
CDA-MOD-LF-A31	1	5.00E-04	1.21E-06	1.00E+00	1.00E+00
YPD-MOD-LF-A1	1	5.00E-04	1.21E-06	1.00E+00	1.00E+00
CDB-MOD-LF-A31	1	5.00E-04	1.21E-06	1.00E+00	1.00E+00

Confidential Treatment Requested by Transocean Holdings LLC TRN-HCEC-00056848

Event Name	Num Of Occ.	Probability of Failure	Fussell-Vesely Importance	Risk Reduction Ratio	Risk Increase Ratio
YPD-ISO-SO-ISMTR	1	2.00E-07	9.70E-07	1.00E+00	5.85E+00

Confidential Treatment Requested by Transocean Holdings LLC TRN-HCEC-00056849

Failure to Perform Well Control Functions

IMPORTANCE MEASURES REPORT (Alternate Cut Sets)
Family: HORIZON
Fault Tree : 1-WELL
(Sorted by Fussell-Vesely Importance)

Event Name	Num of Occ	Probability of Failure	Fussell-Vesely Importance	Risk Reduction Ratio	Risk Increase Ratio
INDICATE-WC	1	1.00E-05	2.70E-01	1.37E+00	2.70E+04
OPR-XHE-FO-WELLC	1	5.00E-06	1.35E-01	1.16E+00	2.70E+04
CDP-MOD-CC-MODM4	1	4.90E-06	1.32E-01	1.15E+00	2.70E+04
POD-MOD-CC-MODM4	1	4.90E-06	1.32E-01	1.15E+00	2.70E+04
OPR-XHE-FT-YPOD	47	3.00E-03	1.21E-01	1.14E+00	4.13E+01
BPD-ACC-UA-MANPI	23	1.00E-03	1.21E-01	1.14E+00	1.22E+02
CDP-SOF-LF-ERROR	1	1.97E-06	5.32E-02	1.06E+00	2.70E+04
POD-SOF-LF-ERROR	1	1.97E-06	5.32E-02	1.06E+00	2.70E+04
YPD-ACC-UA-MANPI	20	1.00E-03	3.95E-02	1.04E+00	4.04E+01
BPD-CON-LK-PIE	35	9.00E-05	2.36E-02	1.02E+00	2.63E+02
EHY-SOV-RO-BPSELB	26	1.24E-04	1.50E-02	1.02E+00	1.22E+02
EHY-HOV-FO-YPSUP	12	2.79E-03	1.27E-02	1.01E+00	5.52E+00
BPD-MOD-CC-MODM2	30	3.50E-05	9.18E-03	1.01E+00	2.62E+02
BPD-PLC-SO-MPRVT	16	7.30E-05	8.80E-03	1.01E+00	1.22E+02
BPD-CON-LF-UNPLG	30	1.26E-04	7.04E-03	1.01E+00	5.68E+01
BPD-CON-LF-OPNFC	30	2.13E-01	7.04E-03	1.01E+00	1.03E+00
YPD-ACC-PB-MANPI	16	1.34E-04	5.30E-03	1.01E+00	4.04E+01
EHY-SOV-LF-YPSELY	12	8.65E-04	3.97E-03	1.00E+00	5.59E+00
YPD-SOV-FO-YSSUP	9	8.65E-04	3.91E-03	1.00E+00	5.52E+00
CDP-PSP-CC-PSP4	1	1.42E-07	3.83E-03	1.00E+00	2.70E+04
POD-PSP-CC-PSP4	1	1.42E-07	3.83E-03	1.00E+00	2.70E+04
YPD-CON-LK-PIE	21	9.00E-05	3.62E-03	1.00E+00	4.12E+01
CWS-XHE-FO-ENABL	11	3.00E-03	3.44E-03	1.00E+00	2.14E+00
EHY-PCV-SO-BPSEL	17	2.80E-05	3.39E-03	1.00E+00	1.22E+02
BPD-SOV-SO-MPRVT	15	2.80E-05	3.37E-03	1.00E+00	1.22E+02
DP-XHE-FO-ENABL	11	3.00E-03	3.29E-03	1.00E+00	2.09E+00
TPP-XHE-FO-ENABL	11	3.00E-03	3.29E-03	1.00E+00	2.09E+00
OPR-XHE-FR-CWSM	11	3.00E-03	3.27E-03	1.00E+00	2.09E+00
CWS-XHE-FR-MANED	11	9.50E-01	3.27E-03	1.00E+00	1.00E+00
TPP-XHE-FR-MANED	11	9.50E-01	3.13E-03	1.00E+00	1.00E+00
OPR-XHE-FR-TPP-M	11	3.00E-03	3.13E-03	1.00E+00	2.04E+00
OPR-XHE-FR-DP-M	11	3.00E-03	3.13E-03	1.00E+00	2.04E+00
DP-XHE-FR-MANED	11	9.50E-01	3.13E-03	1.00E+00	1.00E+00
OPR-PSP-CC-PSP6	1	1.14E-07	3.08E-03	1.00E+00	2.70E+04
YPD-PLC-SO-MPRVT	13	7.30E-05	2.87E-03	1.00E+00	4.03E+01
BPD-CON-LF-X10	25	1.02E-05	2.67E-03	1.00E+00	2.61E+02
BPD-ACC-PB-MANPI	14	1.92E-05	2.31E-03	1.00E+00	1.21E+02
YPD-MOD-CC-MODM2	15	3.50E-05	1.40E-03	1.00E+00	4.08E+01
BPD-HOV-FO-UACLS	16	2.79E-03	1.23E-03	1.00E+00	1.44E+00

Confidential Treatment Requested by Transocean Holdings LLC TRN-HCEC-00056850

Event Name	Num. of Occ.	Probability of Failure	Fussell-Vesely Importance	Risk Reduction Ratio	Risk Increase Ratio
BPD-HOV-FO-LACLS	16	2.79E-03	1.23E-03	1.00E+00	1.44E+00
BPD-CON-LF-X23	13	1.02E-05	1.23E-03	1.00E+00	1.21E+02
BPD-CON-LF-X23A	13	1.02E-05	1.23E-03	1.00E+00	1.21E+02
EHY-PCV-LF-YPSEL	15	2.80E-05	1.11E-03	1.00E+00	4.08E+01
YPD-SOV-SO-MPRVT	13	2.80E-05	1.10E-03	1.00E+00	4.03E+01
YPD-CON-LF-OPNFC	15	2.13E-01	1.07E-03	1.00E+00	1.00E+00
YPD-CON-LF-UNPLG	15	1.26E-04	1.07E-03	1.00E+00	9.49E+00
EHY-SHV-LF-LAC	13	1.75E-04	9.92E-04	1.00E+00	6.68E+00
EHY-SHV-LF-UAC	13	1.75E-04	9.92E-04	1.00E+00	6.68E+00
BPD-CBL-LF-CABLE	19	3.81E-06	9.89E-04	1.00E+00	2.60E+02
EHY-CHK-LF-RCSUP	8	1.75E-04	9.32E-04	1.00E+00	6.33E+00
BPD-CON-LF-X21	9	1.02E-05	8.89E-04	1.00E+00	8.79E+01
EHY-SHV-LF-YPSUP	6	1.75E-04	7.87E-04	1.00E+00	5.50E+00
EHY-CHK-LF-YPSUP	6	1.75E-04	7.87E-04	1.00E+00	5.50E+00
CWS-XHE-FR-UNMAN	10	5.00E-02	5.71E-04	1.00E+00	1.01E+00
OPR-XHE-FR-CWSA	10	1.00E-02	5.71E-04	1.00E+00	1.06E+00
DP-XHE-FR-UNMAN	9	5.00E-02	5.44E-04	1.00E+00	1.01E+00
OPR-XHE-FR-DP-A	9	1.00E-02	5.44E-04	1.00E+00	1.05E+00
TPP-XHE-FR-UNMAN	9	5.00E-02	5.44E-04	1.00E+00	1.01E+00
OPR-XHE-FR-TPP-A	9	1.00E-02	5.44E-04	1.00E+00	1.05E+00
BPD-ACC-UA-LAREG	9	1.00E-03	4.26E-04	1.00E+00	1.43E+00
BPD-ACC-UA-UAREG	9	1.00E-03	4.26E-04	1.00E+00	1.43E+00
YPD-CON-LF-X23	13	1.02E-05	4.04E-04	1.00E+00	4.05E+01
YPD-CON-LF-X23A	13	1.02E-05	4.04E-04	1.00E+00	4.05E+01
YPD-CON-LF-X10	13	1.02E-05	4.04E-04	1.00E+00	4.05E+01
BPD-PLC-SO-CF-OP	7	7.30E-05	3.87E-04	1.00E+00	6.31E+00
BPD-SOV-FO-UACLS	9	8.65E-04	3.68E-04	1.00E+00	1.43E+00
BPD-SOV-FO-LACLS	9	8.65E-04	3.68E-04	1.00E+00	1.43E+00
YPD-REG-LF-M3KSI	9	9.24E-06	3.55E-04	1.00E+00	3.94E+01
YPD-REG-LO-MNREG	9	9.24E-06	3.55E-04	1.00E+00	3.94E+01
CDP-CPU-CC-CPU4	1	1.28E-08	3.46E-04	1.00E+00	2.70E+04
POD-CPU-CC-CPU4	1	1.28E-08	3.46E-04	1.00E+00	2.70E+04
OPR-SOF-LF-ERROR	3	1.97E-06	3.38E-04	1.00E+00	1.72E+02
BPD-PSP-CC-PSP2	9	1.02E-06	2.53E-04	1.00E+00	2.48E+02
EHY-CKV-FO-UOK	56	3.85E-03	2.26E-04	1.00E+00	1.06E+00
EHY-CKV-FO-UOC	56	3.85E-03	2.26E-04	1.00E+00	1.06E+00
EHY-CKV-FO-LIK	56	3.85E-03	2.26E-04	1.00E+00	1.06E+00
EHY-CKV-FO-LIC	56	3.85E-03	2.26E-04	1.00E+00	1.06E+00
EHY-CKV-FO-UIK	56	3.85E-03	2.26E-04	1.00E+00	1.06E+00
EHY-CKV-FO-UIC	56	3.85E-03	2.26E-04	1.00E+00	1.06E+00
EHY-CKV-FO-LOC	56	3.85E-03	2.26E-04	1.00E+00	1.06E+00
EHY-CKV-FO-LOK	56	3.85E-03	2.26E-04	1.00E+00	1.06E+00
EHY-CHK-LF-HLSUP	5	2.50E-05	2.08E-04	1.00E+00	9.35E+00
BPD-REG-LF-M3KSI	5	1.32E-06	1.81E-04	1.00E+00	1.38E+02
YPD-HOV-FO-UACLS	12	2.79E-03	1.55E-04	1.00E+00	1.06E+00
YPD-HOV-FO-LACLS	12	2.79E-03	1.55E-04	1.00E+00	1.06E+00

Confidential Treatment Requested by Transocean Holdings LLC TRN-HCEC-00056851

Event Name	Num. of Occ.	Probability of Failure	Fussell-Vesely Importance	Risk Reduction Ratio	Risk Increase Ratio
BPD-REG-LO-MNREG	4	1.32E-06	1.51E-04	1.00E+00	1.15E+02
BPD-SOV-SO-CF-OP	7	2.80E-05	1.48E-04	1.00E+00	6.31E+00
EHY-HOV-SO-FLUSH	7	2.80E-05	1.48E-04	1.00E+00	6.31E+00
YPD-CBL-LF-CABLE	8	3.81E-06	1.44E-04	1.00E+00	3.89E+01
EHY-PCV-LF-YPSUP	5	2.80E-05	1.25E-04	1.00E+00	5.48E+00
EHY-HOV-LF-LOKAL	32	2.79E-03	1.10E-04	1.00E+00	1.04E+00
EHY-HOV-LF-LIKAL	32	2.79E-03	1.10E-04	1.00E+00	1.04E+00
EHY-HOV-LF-LICAL	32	2.79E-03	1.10E-04	1.00E+00	1.04E+00
EHY-HOV-LF-UIKAL	32	2.79E-03	1.10E-04	1.00E+00	1.04E+00
EHY-HOV-LF-LOCAL	32	2.79E-03	1.10E-04	1.00E+00	1.04E+00
EHY-HOV-LF-UOKAL	32	2.79E-03	1.10E-04	1.00E+00	1.04E+00
EHY-HOV-LF-UOCAL	32	2.79E-03	1.10E-04	1.00E+00	1.04E+00
EHY-HOV-LF-UICAL	32	2.79E-03	1.10E-04	1.00E+00	1.04E+00
YPD-CON-LF-X21	9	1.02E-05	9.50E-05	1.00E+00	1.03E+01
YPD-FTR-LF-20MIC	4	2.52E-03	9.08E-05	1.00E+00	1.04E+00
YPD-CHK-LF-BYPAS	4	1.04E-03	9.08E-05	1.00E+00	1.09E+00
CDA-MOD-LF-A3	5	5.00E-04	5.75E-05	1.00E+00	1.12E+00
CDB-MOD-LF-A3	5	5.00E-04	5.75E-05	1.00E+00	1.12E+00
BPD-MOD-LF-A32	5	5.00E-04	5.75E-05	1.00E+00	1.12E+00
BPD-MOD-LF-A1	5	5.00E-04	5.75E-05	1.00E+00	1.12E+00
CDA-MOD-CC-MODM2	3	3.50E-05	5.20E-05	1.00E+00	2.49E+00
CDB-MOD-CC-MODM2	3	3.50E-05	5.20E-05	1.00E+00	2.49E+00
BPD-CHK-LF-BYPAS	3	1.04E-03	4.91E-05	1.00E+00	1.05E+00
BPD-FTR-LF-20MIC	3	3.60E-04	4.91E-05	1.00E+00	1.14E+00
EHY-CDT-LF-HOT	4	5.72E-06	4.68E-05	1.00E+00	9.19E+00
CWS-SCR-LF-PANEL	4	5.00E-05	4.62E-05	1.00E+00	1.92E+00
BPD-ISO-SO-ISMTR	5	2.00E-07	4.60E-05	1.00E+00	2.30E+02
YPD-CON-LF-X39	4	1.02E-05	4.47E-05	1.00E+00	5.38E+00
YPD-CON-LF-X39C	4	1.02E-05	4.47E-05	1.00E+00	5.38E+00
YPD-ACC-UA-LAREG	7	1.00E-03	4.43E-05	1.00E+00	1.04E+00
YPD-ACC-UA-UAREG	7	1.00E-03	4.43E-05	1.00E+00	1.04E+00
YPD-SOV-FO-UACLS	6	8.65E-04	3.58E-05	1.00E+00	1.04E+00
YPD-SOV-FO-LACLS	6	8.65E-04	3.58E-05	1.00E+00	1.04E+00
YPD-PSP-CC-PSP2	2	1.02E-06	3.09E-05	1.00E+00	3.13E+01
BPD-PLC-SO-UAPRVT	3	7.30E-05	2.75E-05	1.00E+00	1.38E+00
BPD-PLC-SO-LAPRVT	3	7.30E-05	2.75E-05	1.00E+00	1.38E+00
EHY-CDT-LF-RIGID	4	5.72E-06	2.73E-05	1.00E+00	5.77E+00
CP-PSP-CC-PSP4	2	1.42E-07	2.24E-05	1.00E+00	1.59E+02
EHY-SOV-LF-YPSELB	1	8.65E-04	2.02E-05	1.00E+00	1.02E+00
BPD-CPU-CC-CPU2	2	9.17E-08	1.43E-05	1.00E+00	1.57E+02
EHY-SHV-LF-YPHL	1	1.75E-04	1.32E-05	1.00E+00	1.08E+00
EHY-CHK-LF-YPHOT	1	1.75E-04	1.32E-05	1.00E+00	1.08E+00
CDB-BUS-LF-VME-B	1	1.00E-05	9.45E-06	1.00E+00	1.95E+00
CDB-BUS-LF-PROFI	1	1.00E-05	9.45E-06	1.00E+00	1.95E+00
CDA-BUS-LF-PROFI	1	1.00E-05	9.45E-06	1.00E+00	1.95E+00
CDA-BUS-LF-VME-A	1	1.00E-05	9.45E-06	1.00E+00	1.95E+00

Confidential Treatment Requested by Transocean Holdings LLC TRN-HCEC-00056852

Event Name	Num of Occ	Probability of Failure	Fussell-Vesely Importance	Risk Reduction Ratio	Risk Increase Ratio
CDB-MOD-LF-A31	1	5.00E-04	6.74E-06	1.00E+00	1.01E+00
CDA-MOD-LF-A31	1	5.00E-04	6.74E-06	1.00E+00	1.01E+00
YPD-MOD-LF-A1	1	5.00E-04	6.74E-06	1.00E+00	1.01E+00
YPD-MOD-LF-A32	1	5.00E-04	6.74E-06	1.00E+00	1.01E+00
BPD-SOV-SO-UAPRVT	1	2.80E-05	6.32E-06	1.00E+00	1.23E+00
BPD-SOV-SO-LAPRVT	1	2.80E-05	6.32E-06	1.00E+00	1.23E+00
YPD-ISO-SO-ISMTR	1	2.00E-07	5.40E-06	1.00E+00	2.80E+01
BPD-ACC-PB-LAREG	1	1.92E-05	4.34E-06	1.00E+00	1.23E+00
BPD-ACC-PB-UAREG	1	1.92E-05	4.34E-06	1.00E+00	1.23E+00

Confidential Treatment Requested by Transocean Holdings LLC TRN-HCEC-00056853

Failure to Close Upper and Lower Annular

IMPORTANCE MEASURES REPORT (Alternate Cut Sets)
Family: HORIZON
Fault Tree : 1-WELL
(Sorted by Fussell-Vesely Importance)

Event Name	Num. Of Occ.	Probability of Failure	Fussell-Vesely Importance	Risk Reduction Ratio	Risk Increase Ratio
CDP-MOD-CC-MODM4	1	4.90E-06	2.96E-01	1.42E+00	6.03E+04
POD-MOD-CC-MODM4	1	4.90E-06	2.96E-01	1.42E+00	6.03E+04
CDP-SOF-LF-ERROR	1	1.97E-06	1.19E-01	1.14E+00	6.03E+04
POD-SOF-LF-ERROR	1	1.97E-06	1.19E-01	1.14E+00	6.03E+04
OPR-XHE-FT-YPOD	42	3.00E-03	6.80E-02	1.07E+00	2.36E+01
BPD-CON-LK-PIE	30	9.00E-05	4.61E-02	1.05E+00	5.11E+02
EHY-HOV-FO-YPSUP	10	2.79E-03	2.82E-02	1.03E+00	1.11E+01
EHY-SOV-RO-BPSELB	21	1.24E-04	2.43E-02	1.03E+00	1.98E+02
BPD-MOD-CC-MODM2	25	3.50E-05	1.79E-02	1.02E+00	5.10E+02
BPD-CON-LF-OPNFC	25	2.13E-01	1.37E-02	1.01E+00	1.05E+00
BPD-CON-LF-UNPLG	25	1.26E-04	1.37E-02	1.01E+00	1.10E+02
EHY-SOV-LF-YPSELY	11	8.65E-04	8.83E-03	1.01E+00	1.12E+01
YPD-SOV-FO-YSSUP	9	8.65E-04	8.74E-03	1.01E+00	1.11E+01
CDP-PSP-CC-PSP4	1	1.42E-07	8.57E-03	1.01E+00	6.03E+04
POD-PSP-CC-PSP4	1	1.42E-07	8.57E-03	1.01E+00	6.03E+04
CWS-XHE-FO-ENABL	11	3.00E-03	7.68E-03	1.01E+00	3.55E+00
DP-XHE-FO-ENABL	11	3.00E-03	7.35E-03	1.01E+00	3.44E+00
TPP-XHE-FO-ENABL	11	3.00E-03	7.35E-03	1.01E+00	3.44E+00
CWS-XHE-FR-MANED	11	9.50E-01	7.30E-03	1.01E+00	1.00E+00
OPR-XHE-FR-CWSM	11	3.00E-03	7.30E-03	1.01E+00	3.42E+00
OPR-XHE-FR-DP-M	11	3.00E-03	6.98E-03	1.01E+00	3.32E+00
OPR-XHE-FR-TPP-M	11	3.00E-03	6.98E-03	1.01E+00	3.32E+00
DP-XHE-FR-MANED	11	9.50E-01	6.98E-03	1.01E+00	1.00E+00
TPP-XHE-FR-MANED	11	9.50E-01	6.98E-03	1.01E+00	1.00E+00
OPR-PSP-CC-PSP6	1	1.14E-07	6.88E-03	1.01E+00	6.03E+04
EHY-PCV-SO-BPSEL	12	2.80E-05	5.47E-03	1.01E+00	1.97E+02
BPD-CON-LF-X10	21	1.02E-05	5.21E-03	1.01E+00	5.09E+02
BPD-HOV-FO-LACLS	16	2.79E-03	2.75E-03	1.00E+00	1.98E+00
BPD-HOV-FO-UACLS	16	2.79E-03	2.75E-03	1.00E+00	1.98E+00
EHY-SHV-LF-LAC	13	1.75E-04	2.22E-03	1.00E+00	1.37E+01
EHY-SHV-LF-UAC	13	1.75E-04	2.22E-03	1.00E+00	1.37E+01
EHY-CHK-LF-RCSUP	8	1.75E-04	2.08E-03	1.00E+00	1.29E+01
YPD-CON-LK-PIE	16	9.00E-05	2.00E-03	1.00E+00	2.32E+01
BPD-CON-LF-X21	9	1.02E-05	1.99E-03	1.00E+00	1.95E+02
BPD-CON-LF-X23A	9	1.02E-05	1.99E-03	1.00E+00	1.95E+02
BPD-CON-LF-X23	9	1.02E-05	1.99E-03	1.00E+00	1.95E+02
BPD-CBL-LF-CABLE	15	3.81E-06	1.93E-03	1.00E+00	5.05E+02
EHY-SHV-LF-YPSUP	6	1.75E-04	1.76E-03	1.00E+00	1.11E+01
EHY-CHK-LF-YPSUP	6	1.75E-04	1.76E-03	1.00E+00	1.11E+01

Confidential Treatment Requested by Transocean Holdings LLC TRN-HCEC-00056854

Event Name	Num Of Occ	Probability of Failure	Fussell-Vesely Importance	Risk Reduction Ratio	Risk Increase Ratio
CWS-XHE-FR-UNMAN	10	5.00E-02	1.28E-03	1.00E+00	1.02E+00
OPR-XHE-FR-CWSA	10	1.00E-02	1.28E-03	1.00E+00	1.13E+00
DP-XHE-FR-UNMAN	9	5.00E-02	1.22E-03	1.00E+00	1.02E+00
TPP-XHE-FR-UNMAN	9	5.00E-02	1.22E-03	1.00E+00	1.02E+00
OPR-XHE-FR-DP-A	9	1.00E-02	1.22E-03	1.00E+00	1.12E+00
OPR-XHE-FR-TPP-A	9	1.00E-02	1.22E-03	1.00E+00	1.12E+00
BPD-ACC-UA-LAREG	9	1.00E-03	9.52E-04	1.00E+00	1.95E+00
BPD-ACC-UA-UAREG	9	1.00E-03	9.52E-04	1.00E+00	1.95E+00
BPD-PLC-SO-CF-OP	7	7.30E-05	8.65E-04	1.00E+00	1.29E+01
BPD-SOV-FO-UACLS	9	8.65E-04	8.23E-04	1.00E+00	1.95E+00
BPD-SOV-FO-LACLS	9	8.65E-04	8.23E-04	1.00E+00	1.95E+00
CDP-CPU-CC-CPU4	1	1.28E-08	7.72E-04	1.00E+00	6.03E+04
POD-CPU-CC-CPU4	1	1.28E-08	7.72E-04	1.00E+00	6.03E+04
OPR-SOF-LF-ERROR	3	1.97E-06	7.55E-04	1.00E+00	3.83E+02
YPD-MOD-CC-MODM2	11	3.50E-05	7.51E-04	1.00E+00	2.25E+01
EHY-PCV-LF-YPSEL	11	2.80E-05	6.00E-04	1.00E+00	2.25E+01
YPD-CON-LF-OPNFC	11	2.13E-01	5.76E-04	1.00E+00	1.00E+00
YPD-CON-LF-UNPLG	11	1.26E-04	5.76E-04	1.00E+00	5.57E+00
BPD-PSP-CC-PSP2	7	1.02E-06	4.95E-04	1.00E+00	4.85E+02
EHY-CHK-LF-HLSUP	5	2.50E-05	4.66E-04	1.00E+00	1.97E+01
YPD-HOV-FO-LACLS	12	2.79E-03	3.47E-04	1.00E+00	1.12E+00
YPD-HOV-FO-UACLS	12	2.79E-03	3.47E-04	1.00E+00	1.12E+00
EHY-HOV-SO-FLUSH	7	2.80E-05	3.32E-04	1.00E+00	1.29E+01
BPD-SOV-SO-CF-OP	7	2.80E-05	3.32E-04	1.00E+00	1.29E+01
BPD-REG-LF-M3KSI	3	1.32E-06	3.15E-04	1.00E+00	2.39E+02
EHY-PCV-LF-YPSUP	5	2.80E-05	2.80E-04	1.00E+00	1.10E+01
YPD-CON-LF-X10	9	1.02E-05	2.12E-04	1.00E+00	2.18E+01
YPD-CON-LF-X21	9	1.02E-05	2.12E-04	1.00E+00	2.18E+01
YPD-CON-LF-X23A	9	1.02E-05	2.12E-04	1.00E+00	2.18E+01
YPD-CON-LF-X23	9	1.02E-05	2.12E-04	1.00E+00	2.18E+01
YPD-REG-LF-M3KSI	5	9.24E-06	1.69E-04	1.00E+00	1.93E+01
CDA-MOD-CC-MODM2	3	3.50E-05	1.16E-04	1.00E+00	4.32E+00
CDB-MOD-CC-MODM2	3	3.50E-05	1.16E-04	1.00E+00	4.32E+00
CDB-MOD-LF-A3	4	5.00E-04	1.13E-04	1.00E+00	1.23E+00
CDA-MOD-LF-A3	4	5.00E-04	1.13E-04	1.00E+00	1.23E+00
BPD-MOD-LF-A32	4	5.00E-04	1.13E-04	1.00E+00	1.23E+00
BPD-MOD-LF-A1	4	5.00E-04	1.13E-04	1.00E+00	1.23E+00
EHY-CDT-LF-HOT	4	5.72E-06	1.05E-04	1.00E+00	1.93E+01
CWS-SCR-LF-PANEL	4	5.00E-05	1.03E-04	1.00E+00	3.06E+00
YPD-CON-LF-X39	4	1.02E-05	1.00E-04	1.00E+00	1.08E+01
YPD-CON-LF-X39C	4	1.02E-05	1.00E-04	1.00E+00	1.08E+01
YPD-ACC-UA-LAREG	7	1.00E-03	9.89E-05	1.00E+00	1.10E+00
YPD-ACC-UA-UAREG	7	1.00E-03	9.89E-05	1.00E+00	1.10E+00
BPD-ISO-SO-ISMTR	4	2.00E-07	9.07E-05	1.00E+00	4.54E+02
BPD-FTR-LF-20MIC	2	3.60E-04	8.72E-05	1.00E+00	1.24E+00
BPD-CHK-LF-BYPAS	2	1.04E-03	8.72E-05	1.00E+00	1.08E+00

Confidential Treatment Requested by Transocean Holdings LLC TRN-HCEC-00056855

Event Name	Num Of Occ	Probability of Failure	Fussell-Vesely Importance	Risk Reduction Ratio	Risk Increase Ratio
YPD-SOV-FO-LACLS	6	8.65E-04	8.00E-05	1.00E+00	1.09E+00
YPD-SOV-FO-UACLS	6	8.65E-04	8.00E-05	1.00E+00	1.09E+00
YPD-CBL-LF-CABLE	5	3.81E-06	6.97E-05	1.00E+00	1.93E+01
BPD-PLC-SO-UAPRVT	3	7.30E-05	6.15E-05	1.00E+00	1.84E+00
BPD-PLC-SO-LAPRVT	3	7.30E-05	6.15E-05	1.00E+00	1.84E+00
EHY-CDT-LF-RIGID	4	5.72E-06	6.10E-05	1.00E+00	1.17E+01
CP-PSP-CC-PSP4	2	1.42E-07	5.01E-05	1.00E+00	3.53E+02
YPD-CHK-LF-BYPAS	2	1.04E-03	3.37E-05	1.00E+00	1.03E+00
YPD-FTR-LF-20MIC	2	2.52E-03	3.37E-05	1.00E+00	1.01E+00
BPD-CPU-CC-CPU2	2	9.17E-08	3.20E-05	1.00E+00	3.50E+02
CDB-BUS-LF-VME-B	1	1.00E-05	2.11E-05	1.00E+00	3.11E+00
CDB-BUS-LF-PROFI	1	1.00E-05	2.11E-05	1.00E+00	3.11E+00
CDA-BUS-LF-PROFI	1	1.00E-05	2.11E-05	1.00E+00	3.11E+00
CDA-BUS-LF-VME-A	1	1.00E-05	2.11E-05	1.00E+00	3.11E+00
BPD-SOV-SO-UAPRVT	1	2.80E-05	1.41E-05	1.00E+00	1.51E+00
BPD-SOV-SO-LAPRVT	1	2.80E-05	1.41E-05	1.00E+00	1.51E+00
BPD-ACC-PB-LAREG	1	1.92E-05	9.70E-06	1.00E+00	1.51E+00
BPD-ACC-PB-UAREG	1	1.92E-05	9.70E-06	1.00E+00	1.51E+00
YPD-PSP-CC-PSP2	1	1.02E-06	7.60E-06	1.00E+00	8.46E+00

Confidential Treatment Requested by Transocean Holdings LLC TRN-HCEC-00056856

Failure to Close Rams or Open Appropriate Choke or Kill Lines

IMPORTANCE MEASURES REPORT (Alternate Cut Sets)
Family: HORIZON
Fault Tree : 1-WELL
(Sorted by Fussell-Vesely Importance)

Event Name	Num. of Occ.	Probability of Failure	Fussell-Vesely Importance	Risk Reduction Ratio	Risk Increase Ratio
CDP-MOD-CC-MODM4	1	4.90E-06	2.24E-01	1.29E+00	4.57E+04
POD-MOD-CC-MODM4	1	4.90E-06	2.24E-01	1.29E+00	4.57E+04
BPD-ACC-UA-MANPI	23	1.00E-03	2.04E-01	1.26E+00	2.05E+02
OPR-XHE-FT-YPOD	21	3.00E-03	2.01E-01	1.25E+00	6.76E+01
POD-SOF-LF-ERROR	1	1.97E-06	9.00E-02	1.10E+00	4.57E+04
CDP-SOF-LF-ERROR	1	1.97E-06	9.00E-02	1.10E+00	4.57E+04
YPD-ACC-UA-MANPI	20	1.00E-03	6.68E-02	1.07E+00	6.77E+01
BPD-CON-LK-PIE	29	9.00E-05	3.99E-02	1.04E+00	4.42E+02
EHY-SOV-RO-BPSELB	17	1.24E-04	2.53E-02	1.03E+00	2.05E+02
EHY-HOV-FO-YPSUP	12	2.79E-03	2.14E-02	1.02E+00	8.66E+00
BPD-MOD-CC-MODM2	28	3.50E-05	1.55E-02	1.02E+00	4.42E+02
BPD-PLC-SO-MPRVT	16	7.30E-05	1.49E-02	1.02E+00	2.05E+02
BPD-CON-LF-OPNFC	28	2.13E-01	1.19E-02	1.01E+00	1.04E+00
BPD-CON-LF-UNPLG	28	1.26E-04	1.19E-02	1.01E+00	9.53E+01
YPD-ACC-PB-MANPI	16	1.34E-04	8.97E-03	1.01E+00	6.77E+01
EHY-SOV-LF-YPSELY	12	8.65E-04	6.72E-03	1.01E+00	8.77E+00
YPD-SOV-FO-YSSUP	9	8.65E-04	6.62E-03	1.01E+00	8.65E+00
CDP-PSP-CC-PSP4	1	1.42E-07	6.49E-03	1.01E+00	4.57E+04
POD-PSP-CC-PSP4	1	1.42E-07	6.49E-03	1.01E+00	4.57E+04
YPD-CON-LK-PIE	15	9.00E-05	6.01E-03	1.01E+00	6.77E+01
CWS-XHE-FO-ENABL	11	3.00E-03	5.82E-03	1.01E+00	2.93E+00
BPD-SOV-SO-MPRVT	15	2.80E-05	5.71E-03	1.01E+00	2.05E+02
EHY-PCV-SO-BPSEL	15	2.80E-05	5.71E-03	1.01E+00	2.05E+02
TPP-XHE-FO-ENABL	11	3.00E-03	5.57E-03	1.01E+00	2.85E+00
DP-XHE-FO-ENABL	11	3.00E-03	5.57E-03	1.01E+00	2.85E+00
CWS-XHE-FR-MANED	11	9.50E-01	5.53E-03	1.01E+00	1.00E+00
OPR-XHE-FR-CWSM	11	3.00E-03	5.53E-03	1.01E+00	2.84E+00
OPR-XHE-FR-TPP-M	11	3.00E-03	5.29E-03	1.01E+00	2.76E+00
OPR-XHE-FR-DP-M	11	3.00E-03	5.29E-03	1.01E+00	2.76E+00
TPP-XHE-FR-MANED	11	9.50E-01	5.29E-03	1.01E+00	1.00E+00
DP-XHE-FR-MANED	11	9.50E-01	5.29E-03	1.01E+00	1.00E+00
OPR-PSP-CC-PSP6	1	1.14E-07	5.21E-03	1.01E+00	4.57E+04
YPD-PLC-SO-MPRVT	13	7.30E-05	4.86E-03	1.01E+00	6.76E+01
BPD-CON-LF-X10	24	1.02E-05	4.52E-03	1.01E+00	4.41E+02
BPD-ACC-PB-MANPI	14	1.92E-05	3.92E-03	1.00E+00	2.05E+02
YPD-MOD-CC-MODM2	13	3.50E-05	2.33E-03	1.00E+00	6.76E+01
BPD-CON-LF-X23	12	1.02E-05	2.08E-03	1.00E+00	2.04E+02
BPD-CON-LF-X23A	12	1.02E-05	2.08E-03	1.00E+00	2.04E+02
EHY-PCV-LF-YPSEL	13	2.80E-05	1.86E-03	1.00E+00	6.76E+01

Confidential Treatment Requested by Transocean Holdings LLC TRN-HCEC-00056857

Event Name	Num of Occ	Probability of Failure	Fussell-Vesely Importance	Risk Reduction Ratio	Risk Increase Ratio
YPD-SOV-SO-MPRVT	13	2.80E-05	1.86E-03	1.00E+00	6.76E+01
YPD-CON-LF-OPNFC	13	2.13E-01	1.79E-03	1.00E+00	1.01E+00
YPD-CON-LF-UNPLG	13	1.26E-04	1.79E-03	1.00E+00	1.52E+01
BPD-CBL-LF-CABLE	19	3.81E-06	1.67E-03	1.00E+00	4.39E+02
EHY-CHK-LF-RCSUP	8	1.75E-04	1.58E-03	1.00E+00	1.00E+01
EHY-SHV-LF-YPSUP	6	1.75E-04	1.33E-03	1.00E+00	8.62E+00
EHY-CHK-LF-YPSUP	6	1.75E-04	1.33E-03	1.00E+00	8.62E+00
CWS-XHE-FR-UNMAN	10	5.00E-02	9.66E-04	1.00E+00	1.02E+00
OPR-XHE-FR-CWSA	10	1.00E-02	9.66E-04	1.00E+00	1.10E+00
TPP-XHE-FR-UNMAN	9	5.00E-02	9.21E-04	1.00E+00	1.02E+00
OPR-XHE-FR-TPP-A	9	1.00E-02	9.21E-04	1.00E+00	1.09E+00
DP-XHE-FR-UNMAN	9	5.00E-02	9.21E-04	1.00E+00	1.02E+00
OPR-XHE-FR-DP-A	9	1.00E-02	9.21E-04	1.00E+00	1.09E+00
YPD-CON-LF-X23	12	1.02E-05	6.79E-04	1.00E+00	6.74E+01
YPD-CON-LF-X23A	12	1.02E-05	6.79E-04	1.00E+00	6.74E+01
YPD-CON-LF-X10	12	1.02E-05	6.79E-04	1.00E+00	6.74E+01
BPD-PLC-SO-CF-OP	7	7.30E-05	6.55E-04	1.00E+00	9.98E+00
YPD-REG-LO-MNREG	9	9.24E-06	6.01E-04	1.00E+00	6.60E+01
YPD-REG-LF-M3KSI	9	9.24E-06	6.01E-04	1.00E+00	6.60E+01
POD-CPU-CC-CPU4	1	1.28E-08	5.85E-04	1.00E+00	4.57E+04
CDP-CPU-CC-CPU4	1	1.28E-08	5.85E-04	1.00E+00	4.57E+04
OPR-SOF-LF-ERROR	3	1.97E-06	5.72E-04	1.00E+00	2.91E+02
BPD-PSP-CC-PSP2	9	1.02E-06	4.28E-04	1.00E+00	4.19E+02
EHY-CKV-FO-UOC	56	3.85E-03	3.83E-04	1.00E+00	1.10E+00
EHY-CKV-FO-UIK	56	3.85E-03	3.83E-04	1.00E+00	1.10E+00
EHY-CKV-FO-LIC	56	3.85E-03	3.83E-04	1.00E+00	1.10E+00
EHY-CKV-FO-UOK	56	3.85E-03	3.83E-04	1.00E+00	1.10E+00
EHY-CKV-FO-LIK	56	3.85E-03	3.83E-04	1.00E+00	1.10E+00
EHY-CKV-FO-LOK	56	3.85E-03	3.83E-04	1.00E+00	1.10E+00
EHY-CKV-FO-LOC	56	3.85E-03	3.83E-04	1.00E+00	1.10E+00
EHY-CKV-FO-UIC	56	3.85E-03	3.83E-04	1.00E+00	1.10E+00
EHY-CHK-LF-HLSUP	5	2.50E-05	3.53E-04	1.00E+00	1.51E+01
BPD-REG-LF-M3KSI	5	1.32E-06	3.07E-04	1.00E+00	2.33E+02
BPD-REG-LO-MNREG	4	1.32E-06	2.55E-04	1.00E+00	1.94E+02
BPD-SOV-SO-CF-OP	7	2.80E-05	2.51E-04	1.00E+00	9.98E+00
EHY-HOV-SO-FLUSH	7	2.80E-05	2.51E-04	1.00E+00	9.98E+00
YPD-CBL-LF-CABLE	8	3.81E-06	2.44E-04	1.00E+00	6.51E+01
EHY-PCV-LF-YPSUP	5	2.80E-05	2.12E-04	1.00E+00	8.58E+00
EHY-HOV-LF-LIKAL	32	2.79E-03	1.85E-04	1.00E+00	1.07E+00
EHY-HOV-LF-LOCAL	32	2.79E-03	1.85E-04	1.00E+00	1.07E+00
EHY-HOV-LF-LOKAL	32	2.79E-03	1.85E-04	1.00E+00	1.07E+00
EHY-HOV-LF-LICAL	32	2.79E-03	1.85E-04	1.00E+00	1.07E+00
EHY-HOV-LF-UIKAL	32	2.79E-03	1.85E-04	1.00E+00	1.07E+00
EHY-HOV-LF-UOCAL	32	2.79E-03	1.85E-04	1.00E+00	1.07E+00
EHY-HOV-LF-UICAL	32	2.79E-03	1.85E-04	1.00E+00	1.07E+00
EHY-HOV-LF-UOKAL	32	2.79E-03	1.85E-04	1.00E+00	1.07E+00

Confidential Treatment Requested by Transocean Holdings LLC TRN-HCEC-00056858

Event Name	Num. of Occ.	Probability of Failure	Fussell-Vesely Importance	Risk Reduction Ratio	Risk Increase Ratio
YPD-CHK-LF-BYPAS	4	1.04E-03	1.54E-04	1.00E+00	1.15E+00
YPD-FTR-LF-20MIC	4	2.52E-03	1.54E-04	1.00E+00	1.06E+00
BPD-MOD-LF-A32	5	5.00E-04	9.73E-05	1.00E+00	1.19E+00
BPD-MOD-LF-A1	5	5.00E-04	9.73E-05	1.00E+00	1.19E+00
CDA-MOD-LF-A3	5	5.00E-04	9.73E-05	1.00E+00	1.19E+00
CDB-MOD-LF-A3	5	5.00E-04	9.73E-05	1.00E+00	1.19E+00
CDB-MOD-CC-MODM2	3	3.50E-05	8.79E-05	1.00E+00	3.51E+00
CDA-MOD-CC-MODM2	3	3.50E-05	8.79E-05	1.00E+00	3.51E+00
BPD-CHK-LF-BYPAS	3	1.04E-03	8.31E-05	1.00E+00	1.08E+00
BPD-FTR-LF-20MIC	3	3.60E-04	8.31E-05	1.00E+00	1.23E+00
EHY-CDT-LF-HOT	4	5.72E-06	7.93E-05	1.00E+00	1.49E+01
CWS-SCR-LF-PANEL	4	5.00E-05	7.82E-05	1.00E+00	2.56E+00
BPD-ISO-SO-ISMTR	5	2.00E-07	7.79E-05	1.00E+00	3.89E+02
YPD-CON-LF-X39	4	1.02E-05	7.57E-05	1.00E+00	8.40E+00
YPD-CON-LF-X39C	4	1.02E-05	7.57E-05	1.00E+00	8.40E+00
YPD-PSP-CC-PSP2	2	1.02E-06	5.24E-05	1.00E+00	5.23E+01
EHY-CDT-LF-RIGID	4	5.72E-06	4.62E-05	1.00E+00	9.08E+00
CP-PSP-CC-PSP4	2	1.42E-07	3.80E-05	1.00E+00	2.68E+02
EHY-SOV-LF-YPSELB	1	8.65E-04	3.42E-05	1.00E+00	1.04E+00
BPD-CPU-CC-CPU2	2	9.17E-08	2.43E-05	1.00E+00	2.65E+02
EHY-SHV-LF-YPHL	1	1.75E-04	2.23E-05	1.00E+00	1.13E+00
EHY-CHK-LF-YPHOT	1	1.75E-04	2.23E-05	1.00E+00	1.13E+00
CDB-BUS-LF-PROFI	1	1.00E-05	1.60E-05	1.00E+00	2.60E+00
CDA-BUS-LF-PROFI	1	1.00E-05	1.60E-05	1.00E+00	2.60E+00
CDB-BUS-LF-VME-B	1	1.00E-05	1.60E-05	1.00E+00	2.60E+00
CDA-BUS-LF-VME-A	1	1.00E-05	1.60E-05	1.00E+00	2.60E+00
CDB-MOD-LF-A31	1	5.00E-04	1.14E-05	1.00E+00	1.02E+00
CDA-MOD-LF-A31	1	5.00E-04	1.14E-05	1.00E+00	1.02E+00
YPD-MOD-LF-A1	1	5.00E-04	1.14E-05	1.00E+00	1.02E+00
YPD-MOD-LF-A32	1	5.00E-04	1.14E-05	1.00E+00	1.02E+00
YPD-ISO-SO-ISMTR	1	2.00E-07	9.14E-06	1.00E+00	4.67E+01

Confidential Treatment Requested by Transocean Holdings LLC TRN-HCEC-00056859

EQE INTERNATIONAL

CORPORATE HEADQUARTERS

1111 Broadway, 10th Floor
Oakland, CA 94607-4036 USA
Phone 510/817-3100
Fax 510/663-1050
Internet www.eqe.com

4590 MacArthur Blvd., Suite 400
Newport Beach, CA 92660 USA
Telephone (949) 833-3303
Fax (949) 833-2085

EQE International, Ltd.
EQE House
500 Longbarn Boulevard
Birchwood, Warrington
Cheshire WA2 0XF
United Kingdom
Telephone (1925) 838372
Fax (1925) 838396

AMERICAS

Alexandria, VA
Bethesda, MD
Cupertino, CA
Evergreen, CO
Houston, TX
Los Angeles, CA
Richland, WA
San Antonio, TX
Santiago, Chile*
Seattle, WA
St. Louis, MO
Stratham, NH
Wilmington, DE

EUROPE

Aberdeen, UK
London, UK
Madrid, Spain
Paris, France
Sofia, Bulgaria

SOUTH AFRICA

Johannesburg

ASIA-PACIFIC

Auckland, NZ*
Singapore
Seoul, Korea
Tokyo, Japan
Wellington, NZ*

*Joint-venture offices

Confidential Treatment Requested by Transocean Holdings LLC